BS EN ISO 15118-3:2016

Road vehicles — Vehicle to grid communication interface

Part 3: Physical and data link layer requirements
(ISO 15118-3:2015)

Documents
Document Sharing Hub

Full document details: BS EN ISO 15118-3:2016

National foreword

This British Standard is the UK implementation of EN ISO 15118-3:2016. It is identical to ISO 15118-3:2015. It supersedes BS ISO 15118-3:2015 which is withdrawn.

The UK participation in its preparation was entrusted to Technical Committee PEL/69, Electric vehicles.

A list of organizations represented on this committee can be obtained on request to its secretary.

This publication does not purport to include all the necessary provisions of a contract. Users are responsible for its correct application.

© The British Standards Institution 2016.
Published by BSI Standards Limited 2016

ISBN 978 0 580 90929 0

ICS 43.120

Compliance with a British Standard cannot confer immunity from legal obligations.

This British Standard was published under the authority of the Standards Policy and Strategy Committee on 30 June 2015.

Amendments/corrigenda issued since publication

Date	Text affected
31 May 2016	This corrigendum renumbers BS ISO 15118-3:2015 as BS EN ISO 15118-3:2016

Documents
Document Sharing Hub

Full document details: BS EN ISO 15118-3:2016

EUROPEAN STANDARD

NORME EUROPÉENNE

EUROPÄISCHE NORM

EN ISO 15118-3

April 2016

ICS 43.120

English Version

Road vehicles - Vehicle to grid Communication interface - Part 3: Physical and data link layer requirements (ISO 15118-3:2015)

Véhicules routiers - Interface de communication entre véhicule et réseau électrique - Partie 3: Exigences relatives à la couche physique et à la couche liaison de données (ISO 15118-3:2015)

Straßenfahrzeuge - Kommunikationsschnittstelle zwischen Fahrzeug und Ladestation - Teil 3: Anforderungen an physikalische- und Datenverbindungsschnittstelle (ISO 15118-3:2015)

This European Standard was approved by CEN on 21 February 2016.

CEN members are bound to comply with the CEN/CENELEC Internal Regulations which stipulate the conditions for giving this European Standard the status of a national standard without any alteration. Up-to-date lists and bibliographical references concerning such national standards may be obtained on application to the CEN-CENELEC Management Centre or to any CEN member.

This European Standard exists in three official versions (English, French, German). A version in any other language made by translation under the responsibility of a CEN member into its own language and notified to the CEN-CENELEC Management Centre has the same status as the official versions.

CEN members are the national standards bodies of Austria, Belgium, Bulgaria, Croatia, Cyprus, Czech Republic, Denmark, Estonia, Finland, Former Yugoslav Republic of Macedonia, France, Germany, Greece, Hungary, Iceland, Ireland, Italy, Latvia, Lithuania, Luxembourg, Malta, Netherlands, Norway, Poland, Portugal, Romania, Slovakia, Slovenia, Spain, Sweden, Switzerland, Turkey and United Kingdom.

EUROPEAN COMMITTEE FOR STANDARDIZATION
COMITÉ EUROPÉEN DE NORMALISATION
EUROPÄISCHES KOMITEE FÜR NORMUNG

CEN-CENELEC Management Centre: Avenue Marnix 17, B-1000 Brussels

© 2016 CEN All rights of exploitation in any form and by any means reserved worldwide for CEN national Members.

Ref. No. EN ISO 15118-3:2016 E

Documents
Document Sharing Hub

Full document details: BS EN ISO 15118-3:2016

European foreword

The text of ISO 15118-3:2015 has been prepared by Technical Committee ISO/TC 22 “Road vehicles” of the International Organization for Standardization (ISO) and has been taken over as EN ISO 15118-3:2016 by Technical Committee CEN/TC 301 “Road vehicles” the secretariat of which is held by AFNOR.

This European Standard shall be given the status of a national standard, either by publication of an identical text or by endorsement, at the latest by October 2016, and conflicting national standards shall be withdrawn at the latest by October 2016.

Attention is drawn to the possibility that some of the elements of this document may be the subject of patent rights. CEN [and/or CENELEC] shall not be held responsible for identifying any or all such patent rights.

This document has been prepared under a mandate given to CEN by the European Commission and the European Free Trade Association.

According to the CEN-CENELEC Internal Regulations, the national standards organizations of the following countries are bound to implement this European Standard: Austria, Belgium, Bulgaria, Croatia, Cyprus, Czech Republic, Denmark, Estonia, Finland, Former Yugoslav Republic of Macedonia, France, Germany, Greece, Hungary, Iceland, Ireland, Italy, Latvia, Lithuania, Luxembourg, Malta, Netherlands, Norway, Poland, Portugal, Romania, Slovakia, Slovenia, Spain, Sweden, Switzerland, Turkey and the United Kingdom.

Endorsement notice

The text of ISO 15118-3:2015 has been approved by CEN as EN ISO 15118-3:2016 without any modification.

Documents
Document Sharing Hub

Full document details: BS EN ISO 15118-3:2016

Contents

Page

Foreword ... **v**
Introduction ... **vi**
1 Scope ... **1**
2 Normative references ... **1**
3 Terms and definitions ... **1**
4 Symbols and abbreviated terms ... **4**
5 Conventions ... **5**
5.1 Definition of OSI based services ... 5
5.2 Requirement structure ... 5
5.3 Normative references convention ... 5
6 System architecture ... **6**
6.1 Communication layers overview ... 6
6.2 Definition of high-level communication and basic signalling ... 7
6.2.1 Basic signalling ... 7
6.2.2 High-level communication ... 7
6.3 Identification requirements ... 8
6.4 System requirements ... 8
6.4.1 Overview ... 8
6.4.2 EVSE ... 8
6.4.3 EV ... 9
6.5 Configuration of a low-layer communication module ... 10
7 Connection coordination ... **10**
7.1 General ... 10
7.2 Overview ... 10
7.3 Plug-in phase ... 17
7.3.1 EVSE side ... 17
7.3.2 EV side ... 17
7.4 Initialization phase ... 17
7.5 Loss of communication ... 18
7.5.1 EVSE side ... 18
7.5.2 EV side ... 18
7.6 Sleep mode and wake-up ... 19
7.6.1 Entering the sleep mode ... 19
7.6.2 Wake-up ... 19
7.6.3 During a charge pause ... 20
7.7 Plug-out phase ... 20
8 Timings and constants ... **21**
9 Matching EV — EVSE process ... **22**
9.1 Overview ... 22
9.2 Initialization of matching process ... 24
9.3 Discovery of the connected low-layer communication module ... 24
9.4 Validation of matching decision ... 25
9.5 Set-up a logical network ... 27
9.6 Leave the logical network ... 27
9.7 Error handling ... 27
10 EMC requirements ... **27**
11 Signal coupling ... **27**
12 Layer 2 interfaces ... **28**
12.1 Overview ... 28

AVA Documents
Document Sharing Hub

© ISO 2015 – All rights reserved

Full document details: BS EN ISO 15118-3:2016

12.2 Data SAP 28
12.3 Data link control SAP to layer 3 28

Annex A (normative) **HomePlug Green PHY on control pilot line** **30**

Annex B (informative) **IEEE 1901.2 G3-PLC profile on control pilot line** **72**

Bibliography **79**

© ISO 2015 – All rights reserved

Documents
Document Sharing Hub
Full document details: BS EN ISO 15118-3:2016

Foreword

ISO (the International Organization for Standardization) is a worldwide federation of national standards bodies (ISO member bodies). The work of preparing International Standards is normally carried out through ISO technical committees. Each member body interested in a subject for which a technical committee has been established has the right to be represented on that committee. International organizations, governmental and non-governmental, in liaison with ISO, also take part in the work. ISO collaborates closely with the International Electrotechnical Commission (IEC) on all matters of electrotechnical standardization.

The procedures used to develop this document and those intended for its further maintenance are described in the ISO/IEC Directives, Part 1. In particular the different approval criteria needed for the different types of ISO documents should be noted. This document was drafted in accordance with the editorial rules of the ISO/IEC Directives, Part 2 (see www.iso.org/directives).

Attention is drawn to the possibility that some of the elements of this document may be the subject of patent rights. ISO shall not be held responsible for identifying any or all such patent rights. Details of any patent rights identified during the development of the document will be in the Introduction and/or on the ISO list of patent declarations received (see www.iso.org/patents).

Any trade name used in this document is information given for the convenience of users and does not constitute an endorsement.

For an explanation on the meaning of ISO specific terms and expressions related to conformity assessment, as well as information about ISO's adherence to the WTO principles in the Technical Barriers to Trade (TBT) see the following URL: Foreword - Supplementary information

The committee responsible for this document is ISO/TC 22, *Road vehicles*, Subcommittee SC 31, *Data communication*.

ISO 15118 consists of the following parts, under the general title *Road vehicles — Vehicle to grid communication interface*:

— *Part 1: General information and use-case definition*

— *Part 2: Network and application protocol requirements*

— *Part 3: Physical layer and Data Link Layer requirements*

The following parts are under preparation:

— *Part 4: Network and application protocol conformance test*

— *Part 5: Physical layer and data link layer conformance test*

— *Part 6: General information and use-case definition for wireless communication*

— *Part 7: Network and application protocol requirements for wireless communication*

— *Part 8: Physical layer and data link layer requirements for wireless communication*

© ISO 2015 – All rights reserved

Documents
Document Sharing Hub
Full document details: BS EN ISO 15118-3:2016

Introduction

The pending energy crisis and the necessity to reduce greenhouse gas emissions has led the vehicle manufacturers to a very significant effort to reduce the energy consumption of their vehicles. They are presently developing vehicles partly or completly propelled by electric energy. Thus, vehicles will reduce the dependency on oil, improve the global energy efficiency, and reduce the total CO_2 emissions for road transportation if the electricity is produced from renewable sources. To charge the batteries of such vehicles, specific charging infrastructure is required.

Much of the standardization work on dimensional and electrical specifications of the charging infrastructure and the vehicle interface is already treated in the relevant ISO or IEC groups. However, the question of information transfer between the vehicle and the grid has not been treated sufficiently.

Such communication is beneficial for the optimization of energy resources and energy production systems as vehicles can recharge at the most economic or most energy-efficient instants.

It is also required to develop efficient and convenient payment systems in order to cover the resulting micro-payments. The necessary communication channel might serve in the future to contribute to the stabilization of the electrical grid, as well as to support additional information services required to operate electric vehicles efficiently.

© ISO 2015 – All rights reserved
Documents
Document Sharing Hub
Full document details: BS EN ISO 15118-3:2016

INTERNATIONAL STANDARD ISO 15118-3:2015(E)

Road vehicles — Vehicle to grid communication interface —

Part 3: Physical and data link layer requirements

1 Scope

This part of ISO 15118 specifies the requirements of the physical and data link layer for a high-level communication, directly between battery electric vehicles (BEV) or plug-in hybrid electric vehicles (PHEV), termed as EV (electric vehicle) [ISO-1], based on a wired communication technology and the fixed electrical charging installation [Electric Vehicle Supply Equipment (EVSE)] used in addition to the basic signalling, as defined in *[IEC-1]*.

It covers the overall information exchange between all actors involved in the electrical energy exchange. ISO 15118 (all parts) is applicable for manually connected conductive charging.

Only "*[IEC-1]* modes 3 and 4" EVSEs, with a high-level communication module, are covered by this part of ISO 15118.

2 Normative references

The following documents, in whole or in part, are normatively referenced in this document and are indispensable for its application. For dated references, only the edition cited applies. For undated references, the latest edition of the referenced document (including any amendments) applies.

ISO 15118-1:2013, *Road vehicles — Vehicle to grid communication interface — Part 1: General information and use-case definition*

ISO 15118-2:2014, *Road vehicles — Vehicle to grid communication interface — Part 2: Network and application protocol requirements*

IEC 61851-1:2010, *Electric vehicle conductive charging system — Part 1: General requirements*

IEC/TS 62763:2013, *Pilot function through a control pilot circuit using PWM (pulse width modulation) and a control pilot wire*

3 Terms and definitions

For the purposes of this document, the terms and definition in *[ISO-1]* and the following apply.

3.1
amplitude map
specifies a transmit power-reduction factor for each subcarrier related to the tone mask

3.2
central coordinator
manager of a HomePlug Green PHY network

3.3
channel access priority
CAP
method to prioritize the channel access

Note 1 to entry: See *[HPGP]*.

© ISO 2015 – All rights reserved

Documents
Document Sharing Hub
Full document details: BS EN ISO 15118-3:2016

3.4
coexistence
ability of different low-layer communication systems to share the same physical media and to function simultaneously

3.5
communication media
physical media carrying the low-layer communication signal is given by the cable assembly, which connects the charging infrastructure and the EV

3.6
communication node
device equipped with a low-layer communication modem chip; it characterizes one logical and physical communication device that is attached to a physical media and is capable of sending, receiving, or forwarding information over a communication channel

3.7
connection coordination
entity which provides the whole functionality for EV to EVSE matching and initialization, through the data link control SAP, described in Clause 6

Note 1 to entry: This entity also controls the relationships between the basic signalling and the upper layers.

3.8
crosstalk
capacitive or inductive coupling between two individual electric circuits, each providing a media for a low-layer communication network, in a way that the two networks are influenced by each other

3.9
data link control SAP
service access point which defines the interface between the connection coordination module and the low-layer communication technology for managing the link status

3.10
DATA SAP
service access point that defines the interface between layer 2 and layer 3 for exchange of v2g-related payload

3.11
ETH SAP
Ethernet II-class SAP supports applications using Ethernet II class packets, including IEEE 802.3 with or without IEEE 802.2 (LLC), IEEE 802.1H (SNAP) extensions, and/or VLAN tagging

3.12
external identification means
EIM
any external means that enable the user to identify his contract or the car

3.13
initialization
process of interaction between the EV, EVSE, and an external trigger, beginning from plug-in of the cable assembly until the decision for the charging mode to be applied

Note 1 to entry: This process is used for the charging modes 3 and 4, as described in *[IEC-1].*

3.14
IO SAP
IO control path interfaces hardware i/o control (e.g. control pilot duty cycle) and the control pilot wire

Note 1 to entry: This entity provides an IO SAP, which is defined in Clause 12.

© ISO 2015 – All rights reserved
Documents
Document Sharing Hub
Full document details: BS EN ISO 15118-3:2016

3.15
inter system protocol
enables various broadband power line systems to share power line communication resources in time (time domain multiplex), in frequency (frequency domain multiplex), or both

Note 1 to entry: For more information, refer to *[IEEE]*.

3.16
logical network
set of low-layer communication stations which use the same network key

Note 1 to entry: Only members of the same logical network are able to exchange encrypted payload data and are visible for each other on higher layers. Different logical networks might exist on the same physical media at the same time and are typically used for network segmentation.

Note 2 to entry: A logical network is defined for layer 2.

3.17
low-layer communication
functions managed by the OSI layer 1 and layer 2 of the modem

3.18
low-layer communication module
functional assembly behind each socket outlet or each connector, depending on the type of EV connection (*[IEC-1]*), which includes the communication node and the connection coordination functionality

3.19
MAC address
unique identifier assigned to network interfaces for communication on the data link layer

3.20
management message entry
MME
messages exchanged between PLC nodes or a PLC node and higher layers for control purposes

3.21
matching
process to determine the low-layer communication modules of EV and EVSE, where EV is physically connected to, in a direct way

Note 1 to entry: "Matching" refers to "Association" (use-case A) in ISO 15118-1.

3.22
nominal duty cycle
10 % to 96 % control pilot duty cycle, according to *[IEC-1]*, generated by the EVSE

3.23
pilot function controller
system that manages the control pilot line on the EVSE side, according to *[IEC-1]*

3.24
plug and charge
identification mode where the customer just has to plug their vehicle into the EVSE and all aspects of charging are automatically taken care of with no further intervention from the customer

3.25
QPSK modulation
phase modulation technique that transmits two bits in four modulation states

© ISO 2015 – All rights reserved

Documents
Document Sharing Hub
Full document details: BS EN ISO 15118-3:2016

3.26
ROBO mode
communication mode which uses QPSK only for carrier modulation within the orthogonal frequency division multiplexing (OFDM) to achieve higher robustness in transmission

Note 1 to entry: The ROBO mode can be set to three different performance levels: Mini-ROBO, Standard ROBO, and High-speed ROBO.

3.27
shared bandwidth
in cases where different systems use the same physical media to transmit data, the data rate for each system might be limited, depending on the mechanism used to allocate it

3.28
signal coupling
method of coupling the signal on the communication media

3.29
signal level attenuation characterization
SLAC
protocol to measure the signal strength of a signal between HomePlug Green PHY stations

3.30
tone mask
defines the set of tones (or carriers) that can be used in a given regulatory jurisdiction or given application

3.31
valid duty cycle
duty cycle that is 5 % or 10 % to 96 %, according to *[IEC-1]*, generated by the EVSE

4 Symbols and abbreviated terms

ARIB	Association of Radio Industries and Businesses
CAP	Channel Access Priority
CCo	Central Coordinator
D-LINK	Data Link
EIM	External Identification Mean (as defined in ISO 15118-1)
ERDF	Electricité et Réseau de France
FCC	Federal Communications Commission
HLE	Higher Layers Entities
HPGP	HomePlug Green PHY
ID	Identification
IEEE	Institute of Electrical and Electronics Engineers
ISP	Intersystem Protocol
ITU	International Telecommunication Union
MAC	Media Access Control

© ISO 2015 – All rights reserved
Documents
Document Sharing Hub
Full document details: BS EN ISO 15118-3:2016

MME	Management Message Entry
PE	Protective Earth
PLC	Power Line Communication
PnC	Plug and Charge (as defined in ISO 15118-1)
QPSK	Quadrature Phase Shift Keying
SAP	Service Access Point
SE	Supply Equipment
SLAC	Signal Level Attenuation Characterization

5 Conventions

5.1 Definition of OSI based services

[ISO-3] is based on the OSI service conventions (ISO/IEC 10731:1994) for the individual layers specified in this part of ISO 15118.

5.2 Requirement structure

Each individual requirement included in this part of ISO 15118 has a unique code, e.g. **[V2G3-YXX-ZZZ]** requirement text, where

— "V2G3" represents the *[ISO-3]* set of standards,

— "Y" represents the main body (M)/Annexes (Annexes' letter),

— "XX" represents the number of the current clause,

— "ZZZ" represents the individual requirement number and

— "requirement text" includes the actual text of the requirement.

EXAMPLE **[V2G3-M01–01]** This shall be an example requirement.

5.3 Normative references convention

Each reference to a normative document has the following unique codes assigned:

[IEC-1]	IEC 61851-1
[IEC-21]	IEC 61851-21
[IEC-22]	IEC 61851-22
[IEC-2]	IEC 62196-2
[IEC-3]	IEC/TS 62763
[ISO-0]	ISO 15118-series
[ISO-1]	ISO 15118-1
[ISO-2]	ISO 15118-2

© ISO 2015 – All rights reserved

Documents
Document Sharing Hub
Full document details: BS EN ISO 15118-3:2016

[ISO-3] ISO 15118-3

6 System architecture

6.1 Communication layers overview

This part of ISO 15118 is organized along architectural lines, emphasizing the large-scale separation of the system into two parts: the MAC sublayer of the data link layer and the physical layer. These layers are intended to correspond closely to the lowest layers of the ISO/IEC model for open systems. Figure 1 shows the relationship of the *[ISO-3]* to the OSI reference model.

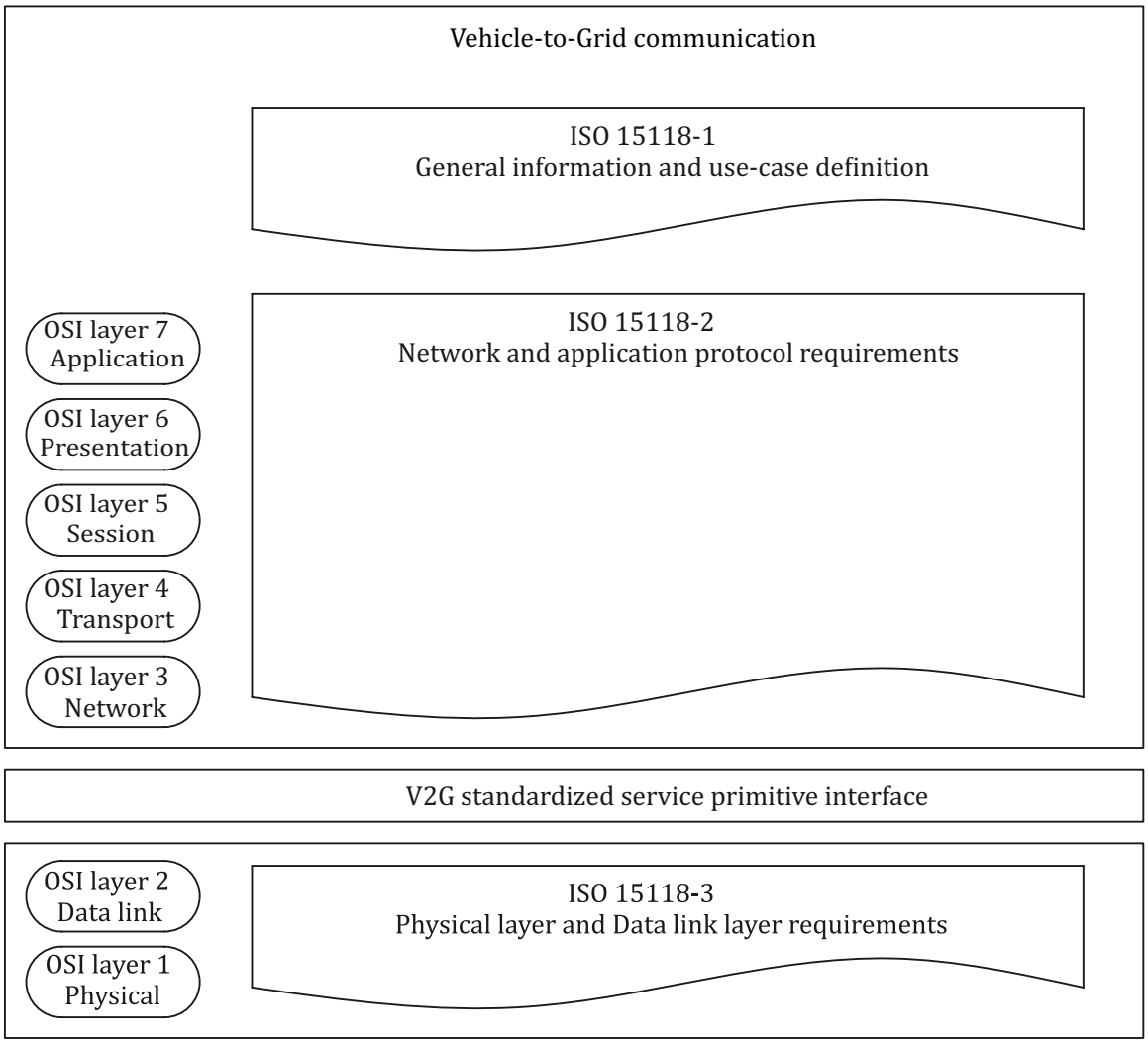

Figure 1 — Overview of *[ISO-0]* in the ISO/IEC OSI reference model

[ISO-3] defines requirements applicable to layer 1 and layer 2, including V2G standardized service primitive interface, according to the OSI layered architecture. Layer 3 to layer 7 is specified in *[ISO-2].*

Beside the communication related stack on the left and middle of Figure 2, a hardware control path on the right provides triggering and signalling means for *[IEC-1]* related signalling.

This part of ISO 15118 is covering both AC and DC use-cases. If not defined differently, requirements apply for both AC and DC.

© ISO 2015 – All rights reserved
Documents
Document Sharing Hub
Full document details: BS EN ISO 15118-3:2016

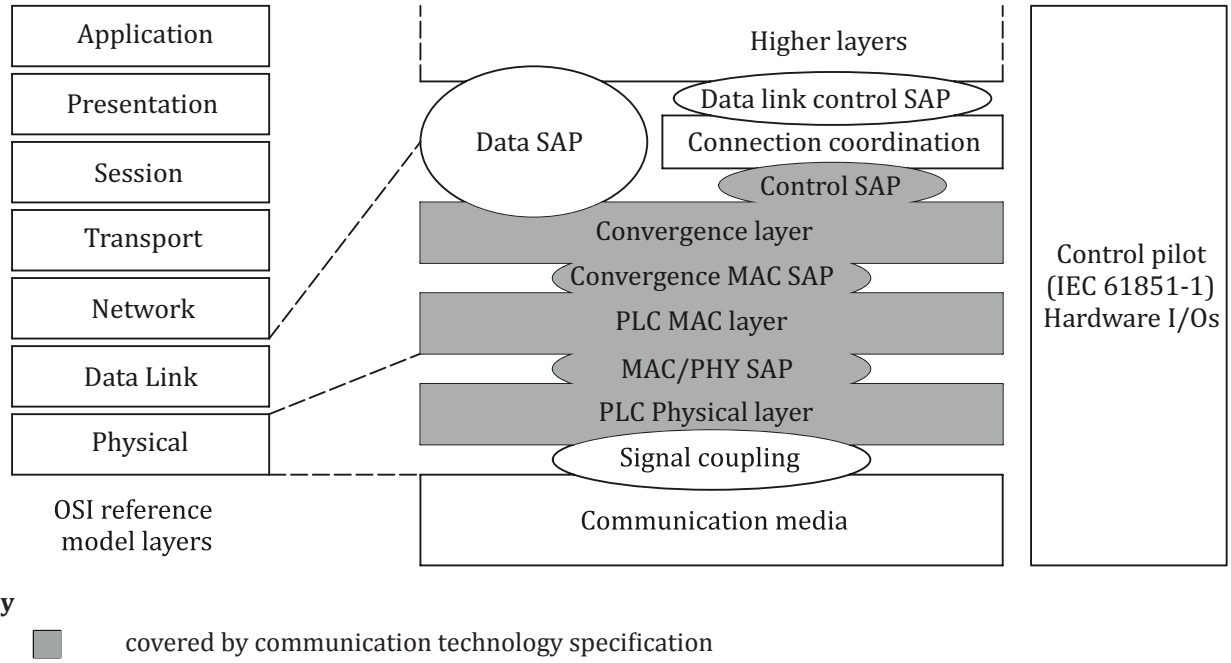

Figure 2 — *[ISO-3]* relationship to the ISO/IEC OSI reference model

6.2 Definition of high-level communication and basic signalling

This part of ISO 15118 describes in the main body, the general requirements to the communication. Specific requirements depending on the technology are described in the Annex A.

6.2.1 Basic signalling

[V2G3-M06-01] The basic signalling follows *[IEC-1]*. All timings shall be compliant with the *[IEC-1]*, Annex A.

Any charging process, no matter the presence of high-level communication, uses the bidirectional signalling according to *[IEC-1]*, indicating EV related information through control pilot states and EVSE related information through the duty cycle of the control pilot signal.

6.2.2 High-level communication

[V2G3-M06-02] The HLC shall be used in addition to the basic signalling in order to enable a bidirectional communication and offer additional features.

The sequence of the data exchange within the HLC-based charging session is done in accordance with the *[ISO-2]* communication protocol.

It can be split into three periods as follows:

— data link setup;

— V2G setup;

— V2G charging loop.

NOTE The detailed descriptions are given in [ISO-2].

© ISO 2015 – All rights reserved

Documents
Document Sharing Hub
Full document details: BS EN ISO 15118-3:2016

[V2G3-M06-03] During the V2G charging loop, the PWM duty cycle shall not change due to dynamically changed grid information. Those dynamically changed grid limitations shall be provided through the high-level communication messages.

In case basic charging is used as back-up of HLC-C (e.g. when HLC-C has failed), the duty cycle is allowed to change due to dynamically changed grid information, according *[IEC-1]* requirements.

6.3 Identification requirements

The initialization phase depends on whether identification "ID from EV" or EIM is required, as described in *[ISO-1]*, use-cases D1, D2, D3, and D4.

[V2G3-M06-04] When authorization (payment) is required for charging, the EVSE shall offer PnC (ID from EV) or EIM means.

Any payment included in a package (parking fee, in a flat rate, etc.) is considered as "No ID required" since the energy is paid for by means totally independent of the EVSE.

NOTE 1 The need for authentication can be externally triggered.

NOTE 2 The "ID required" covers only the ID for operating purposes and does not cover all the identification linked to the "security" as described in the *[ISO-2]*.

NOTE 3 The feature PnC is called "ID from EV", using the message set of *[ISO-2]*.

NOTE 4 At a publicly accessible EVSE with only "ID from EV", there might be a fallback solution to allow any EV to be able to charge.

If the duty cycle is set to 5 % and PnC is intended to be used, the EVCC may launch an "ID recognition" from the EV (Use-case D1 and D2 of *[ISO-1]*). According to the EV's answer, the SECC may decide to allow the charge or not.

6.4 System requirements

In the following subclauses, the abbreviations concerning the control pilot states (eg X1, X2, B1, B2, etc.), are described in *[IEC-3].*

6.4.1 Overview

This Clause defines the requirements on the triggering of the EVSE and the EV immediately after the plug-in of the cable assembly. It includes the specifications of sequences, when and how the contract ID is recognized, when to launch the matching process (at the MAC level), and how to decide to use basic charging or high-level communication charging.

6.4.2 EVSE

6.4.2.1 Control pilot requirements

Each EVSE outlet has its own dedicated pilot function controller.

The trigger and timing relations between basic signalling and HLC connection setup are described in Clause 7.

For implementation and synchronization between *[IEC-1]* and *[ISO-3*], please refer to *[ISO-2]* 8.7.4.

NOTE 1 If a nominal duty cycle is set, it is recommended to keep it as the maximum current capacity of the charging station and let the high-level communication messages dynamically adjust the available max current.

© ISO 2015 – All rights reserved
Documents
Document Sharing Hub
Full document details: BS EN ISO 15118-3:2016

[V2G3-M06-05] In case no communication could be established with a 5 % control pilot duty cycle (matching process not started), if the EVSE wants to switch to a nominal duty cycle, then the change from 5 % to a nominal duty cycle shall be done with a specific sequence B2 or C2 (5 %) -> E or F -> B2 (nominal value) to allow backward compatibility. The minimum time at the control pilot state E or F is defined to T_step_EF.

NOTE 2 Each EVSE supplier is free to choose between the state E and the state F to make the transition, according to its implementation.

[V2G3-M06-06] In case a communication has already been established within 5 % control pilot duty cycle ("Matched state" reached or matching process ongoing), a change from 5 % to a nominal duty cycle shall be done with a X1 state in the middle (minimum time as defined in [IEC-3] Seq 9.2), to signal the EV that the control pilot duty cycle will change to a nominal duty cycle.

[V2G3 M06-07] If an AC EVSE applies a 5 % control pilot duty cycle, and the EVSE receives no SLAC request within TT_EVSE_SLAC_init, the EVSE shall go to state E or F for T_step_EF, shall go back to 5 % duty cycle, and shall reset the TT_EVSE_SLAC_init timeout before being ready to answer a matching request again. This sequence shall be retried C_sequ_retry times. At the end, without any reaction, the EVSE shall go to state X1.

NOTE 3 In the X1 control pilot state, a customer can make an EIM action at any time.

[V2G3-M06-08] After positive EIM, if no matching process is running, the EVSE shall signal control pilot state E/F for T_step_EF, then signal control pilot state X1/X2 (nominal).

[V2G3 -M06-09] If a control pilot state E/F -> Bx, Cx, Dx transition is used for triggering retries or legacy issues, the state E/F shall be at least T_step_EF.

6.4.2.2 Low-layer communication requirements

The *[ISO-1]*, Annex A provides examples for charging infrastructure architectures.

The matching process is designed for working between the low-layer communication module locally assigned to each socket-outlet, on the EVSE side, and the EVCC.

NOTE 1 The complete matching process description is given in Clause 9.

[V2G3-M06-10] In case of charging station enclosures with multiple socket-outlets or attached cables and only one low-layer communication module managing the complete station, these shall behave as an individual low-layer communication module for each outlet.

NOTE 2 It's highly recommended to build a point to point architecture (one low-layer communication module on EVSE side, and one low-layer communication module per EV).

[V2G3-M06-11] The matching process shall be launched by a transition from state A, E, or F to state Bx, Cx, or Dx.

6.4.3 EV

6.4.3.1 Control pilot requirements

On seeing a nominal duty cycle, the EV may launch the charge at any time.

[V2G3-M06-12] In the HLC-C mode, in case of a nominal duty cycle, the vehicle shall determine the maximum charge current, defined by the EVSE, by calculating the minimum of the following values:

© ISO 2015 – All rights reserved

Documents
Document Sharing Hub
Full document details: BS EN ISO 15118-3:2016

— maximum charge current given by the control pilot duty cycle;

— maximum charge current given by the HLC-C messages.

6.4.3.2 Low-layer communication requirements

[V2G3-M06-13] The matching process shall be launched by a transition from state A, E, or F to state Bx, Cx, or Dx.

[V2G3-M06-14] The EV shall always charge in the HLC-C mode, as soon as V2G charging loop is started.

Within the V2G charging loop, the EV is not allowed to charge in the basic charging mode.

Before the V2G charging loop and after the V2G communication session, the EV is allowed to charge in the basic charging mode in case of nominal control pilot duty cycle.

In case of AC-charging, an EV should be capable to switch from a HLC-C mode to a basic charging mode, if an error occurs on the high-level communication, even if a HLC-C mode is already launched.

[V2G3-M06-15] During a matching process, a change in the duty cycle shall not terminate/interrupt the matching process on EV side.

6.5 Configuration of a low-layer communication module

If there is a coexistence issue with the grid, technical decisions including application of alternative PLC standard technologies like ISO/IEC 12139-1, should be considered in that situation: KR.

Coexistence mechanisms are not defined in this part of ISO 15118.

[V2G3-M06-16] Each communication node shall provide a method to exchange authorized frequencies to be used, to be in line with frequency restrictions. A communication node shall respect the spectrum limitation sent by the counterpart node.

NOTE All EVSEs should be able to update the set of frequencies to be used according to future legislative regulations.

7 Connection coordination

7.1 General

This Clause describes the behaviour of the system, at different phases of a charging session, between a plug-in and a plug-out.

7.2 Overview

Table 1 gives a summary of PnC and/or EIM implementation on EVSEs. Details are given in the following figures. For example, Seq 1 b), c), and d) means that the branches b), c), and d) apply.

© ISO 2015 – All rights reserved
Documents
Document Sharing Hub
Full document details: BS EN ISO 15118-3:2016

Table 1 — EIM and/or PnC in EVSEs

	Figure no.	Description	PnC	EIM with BC	EIM w/o BC	IEC 61851-1 charging
AC EVSE	Figure 3	Seq1. Matching not started (start with 5 %)	a)	b)	c)	d)
	Figure 4	Seq2. Matching not started (start with X1)	a)	b)	c)	d)
	Figure 5	Seq3. Matching started (start with 5 %)	a)	b)	c)	-
	Figure 6	Seq4. Matching started (start with X1)	a)	b)	c)	-
	Figure 7	Seq5. EIM before plug-in	-	b)	c)	d)
DC EVSE	Figure 8	Seq6.	a)	-	c)	-

The following figures show EVSEs control pilot handling for different scenarios. Re-init means a restart of the session (without plug-in/out) by control pilot state E transition (e.g. error handling).

Figure 3 shows an AC EVSE supporting HLC-C with PnC and EIM. The matching process is not started when EIM is done. The EVSE applies 5 % control pilot duty cycle after plug-in. Control pilot state X1 could be applied for a short time until the control pilot oscillator is switched on. If an EVSE only supports EIM or PnC, only some branches exist.

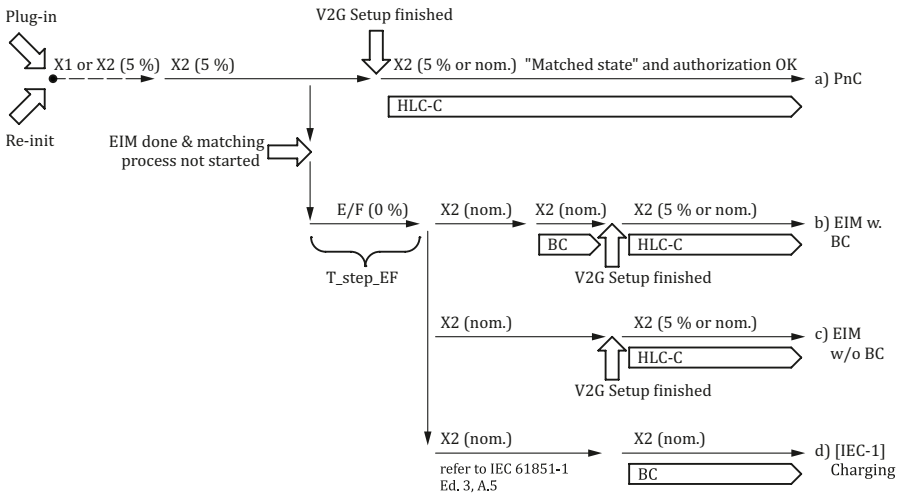

Key

●- - -►	possible procedure
——►	mandatory procedure
HLC-C	charging controlled by high-level communication
BC	charging controlled by IEC 61851-1
⇨	trigger condition

NOTE 1 CP state X1 is allowed instead of X2 (nom.) following [IEC-3] (Table 5, X1 state usage).

NOTE 2 Branch d) is for EVs not supporting HLC-C.

Figure 3 — Connection coordination Seq 1: AC EVSE with PnC and EIM and matching process not started before EIM, 5 % control pilot duty cycle after plug-in

AVA Documents
Document Sharing Hub

© ISO 2015 – All rights reserved

Full document details: BS EN ISO 15118-3:2016

Figure 4 shows an AC EVSE supporting HLC-C with PnC and EIM. The matching process is not started when EIM is done. The EVSE applies control pilot state X1 after plug-in. If an EVSE only supports EIM or PnC, only some branches exist.

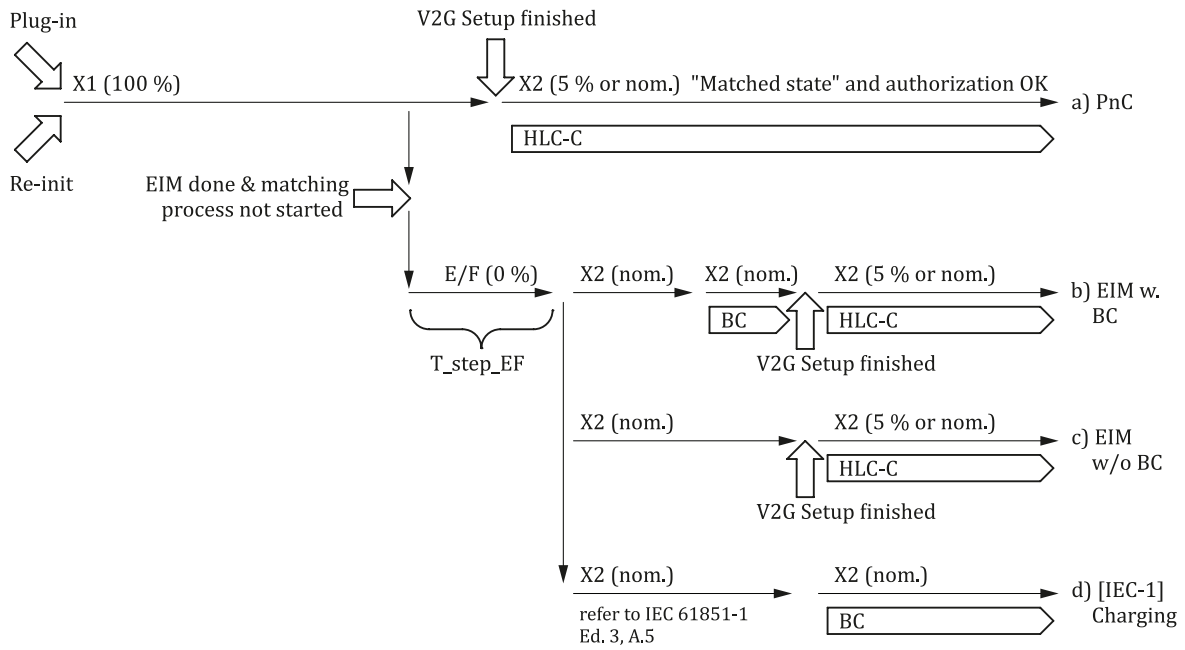

Key

- possible procedure
- mandatory procedure
- HLC-C — charging controlled by high-level communication
- BC — charging controlled by IEC 61851-1
- trigger condition

NOTE 1 CP state X1 is allowed instead of X2 (nom.) following [IEC-3] (Table 5, X1 state usage).

NOTE 2 Branch d) is for EVs not supporting HLC-C.

Figure 4 — Connection coordination Seq 2: AC EVSE with PnC and EIM and matching process not started before EIM, control pilot state X1 after plug-in

© ISO 2015 – All rights reserved
Documents
Document Sharing Hub
Full document details: BS EN ISO 15118-3:2016

Figure 5 shows an AC EVSE supporting HLC-C with PnC and EIM. The matching process is already started when EIM is done. The EVSE applies 5 % control pilot duty cycle after plug-in. Control pilot state X1 could be applied for a short time until the control pilot oscillator is switched on. If an EVSE only supports EIM or PnC, only some branches exist.

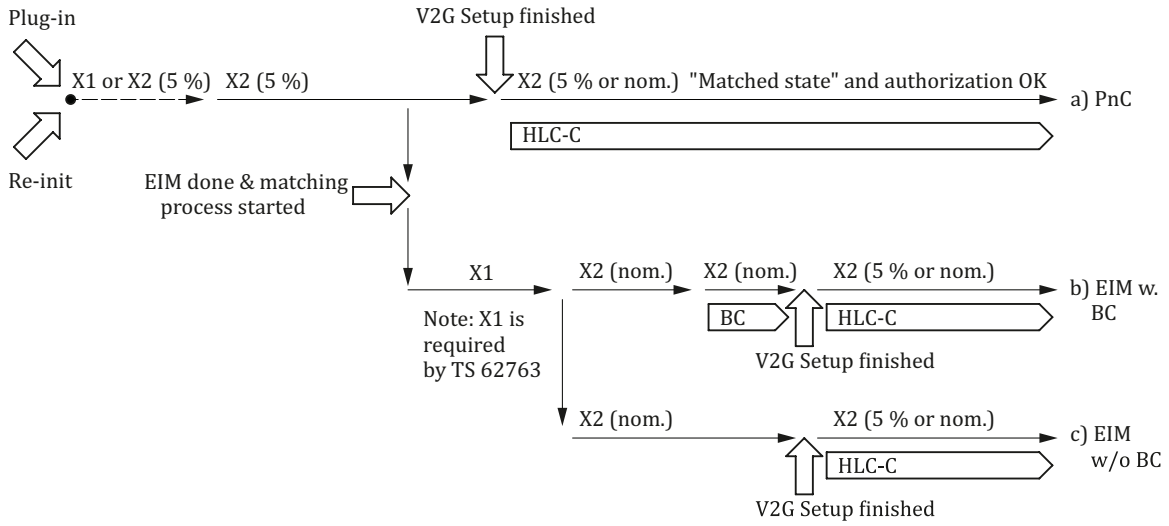

Key

possible procedure

mandatory procedure

HLC-C charging controlled by high-level communication

BC charging controlled by IEC 61851-1

trigger condition

NOTE CP state X1 is allowed instead of X2 (nom.) following [IEC-3] (Table 5, X1 state usage).

Figure 5 — Connection coordination Seq 3: AC EVSE with PnC and EIM and matching process started before EIM, 5 % control pilot duty cycle after plug-in

© ISO 2015 – All rights reserved

Documents
Document Sharing Hub
Full document details: BS EN ISO 15118-3:2016

Figure 6 shows an AC EVSE supporting HLC-C with PnC and EIM. The matching process is already started when EIM is done. The EVSE applies control pilot state X1 after plug-in. If an EVSE only supports EIM or PnC, only some branches exist.

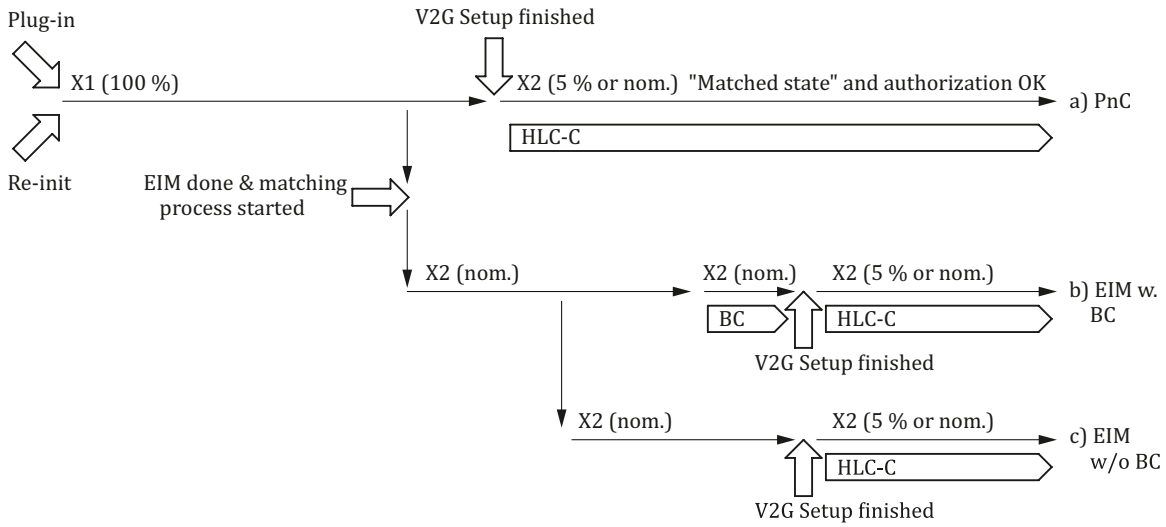

Key

- possible procedure
- mandatory procedure
- HLC-C — charging controlled by high-level communication
- BC — charging controlled by IEC 61851-1
- trigger condition

NOTE CP state X1 is allowed instead of X2 (nom.) following [IEC-3] (Table 5, X1 state usage).

Figure 6 — Connection coordination Seq 4: AC EVSE with PnC and EIM and matching process started before EIM, control pilot state X1 after plug-in

© ISO 2015 – All rights reserved
Documents
Document Sharing Hub
Full document details: BS EN ISO 15118-3:2016

Figure 7 shows an AC EVSE supporting HLC-C with PnC and EIM. EIM is done before plug-in.

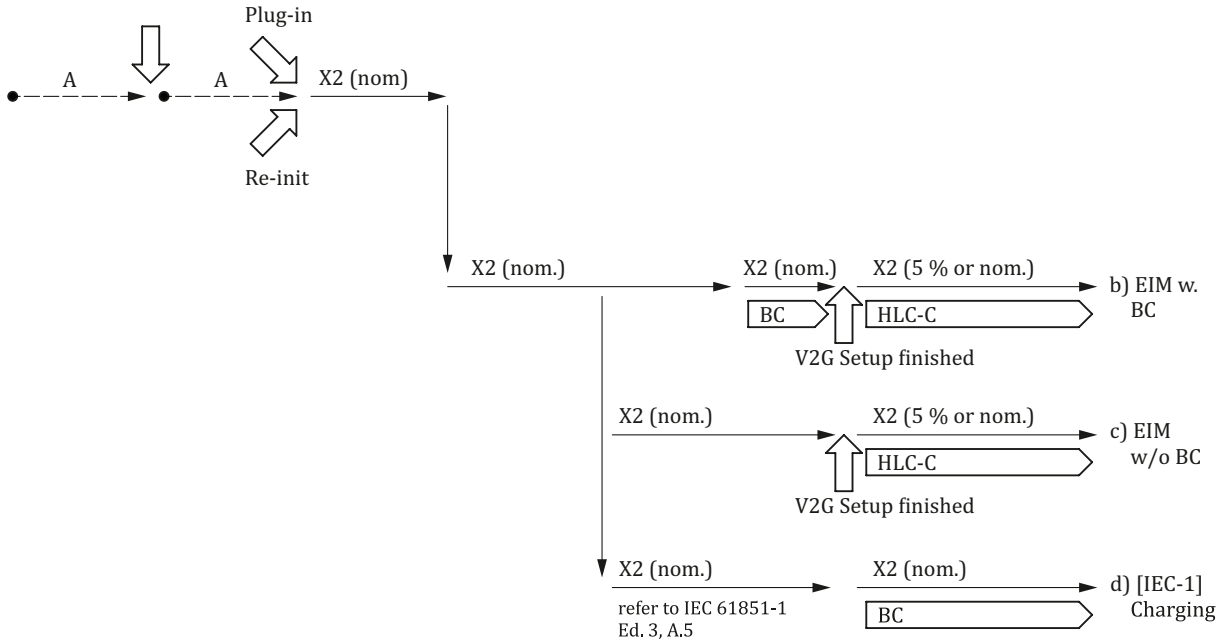

Key

possible procedure

mandatory procedure

HLC-C — charging controlled by high-level communication

BC — charging controlled by IEC 61851-1

trigger condition

NOTE CP state X1 is allowed instead of X2 (nom.) following [IEC-3] (Table 5, X1 state usage).

Figure 7 — Connection coordination Seq 5: AC EVSE with EIM, EIM before plug-in, control pilot state X2 after plug-in

© ISO 2015 – All rights reserved

Documents
Document Sharing Hub
Full document details: BS EN ISO 15118-3:2016

Figure 8 shows a DC EVSE supporting HLC-C with PnC and EIM. First branch shows a PnC case. Second branch shows a case where EIM is done after plug-in. Third branch shows a case where EIM is done before plug-in.

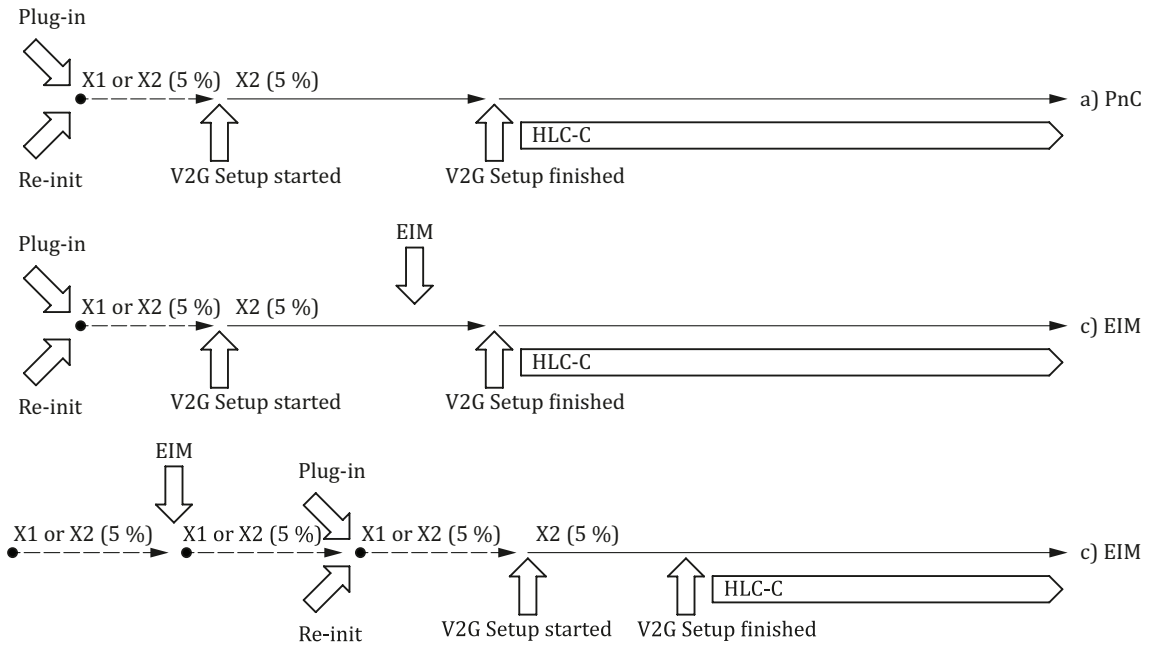

Key

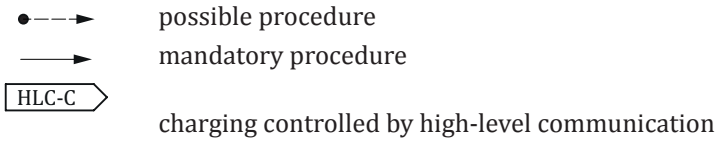

Figure 8 — Connection coordination Seq 6: DC EVSE with PnC and EIM

Figure 9 Shows AC EVSE control pilot timeout handling for 5 % control pilot duty cycle. See **[V2G3 M06-07].**

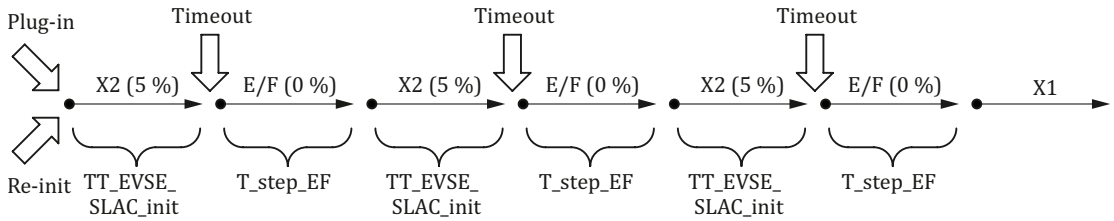

Figure 9 — Connection coordination Seq 7: AC EVSE timeout handling for 5 % control pilot duty cycle

© ISO 2015 – All rights reserved
Documents
Document Sharing Hub
Full document details: BS EN ISO 15118-3:2016

Table 2 shows the options for EVs with and without HLC, according to the different control pilot duty cycle values.

Table 2 — EV behaviour

Duty cycle seen by the EV	EV w/o HLC	EV with HLC
B1	no reaction	Matching process to be launched If the EV_Discovering_Status is "EVSE_FOUND": V2G Setup finished: wait If EV_Discovering_Status = EVSE_NOT_FOUND: no reaction
5 %	no reaction	Matching process to be launched If the EV_Discovering_Status is "EVSE_FOUND": V2G Setup finished: continue with negotiated charge profile If EV_Discovering_Status = "EVSE_NOT_FOUND": no reaction
X2 (nom)	BC	BC is allowed In parallel, matching to be launched When EV_Discovering_Status = EVSE_FOUND: HLC can begin at any time. If EV_Discovering_Status = EVSE_NOT_FOUND: BC allowed or no reaction.
NOTE No reaction means that the EV may go to sleep, according to the implementation.		

7.3 Plug-in phase

This phase covers the plug-in up to the beginning of the charge.

7.3.1 EVSE side

[V2G3-M07-01] After successful detection of the plug-in of a cable assembly, the low-layer communication module shall be ready for communication in less than T_conn_max_comm.

NOTE 1 Plug-in detection by EVSE can be done either by proximity pin detection or by closed control pilot.

During a plug-in phasis, AC EVSEs with Type 2 outlet or DC EVSEs with Type 1 connector should only apply a voltage to the control pilot when the low-layer communication module is ready for communication. This speeds up the communication setup.

[V2G3-M07-02] The EVSE shall only apply 5 % control pilot duty cycle if the low-layer communication module is ready for communication (receive first SLAC message).

According to the initialization process, an EVSE should be prepared to receive EIM identification, if offered, at any time.

NOTE 2 The EIM sequence is compliant with the use-case A2 from *[ISO-1]*.

7.3.2 EV side

When detecting a nominal duty cycle, the EV can either start charging in the basic charging mode or wait until the HLC-C mode is established.

7.4 Initialization phase

When the V2G Data link setup is successful and if the PnC identification mode is implemented, further identification is managed by higher layers as described in *[ISO-2]* (e.g. ID recognition).

AVA Documents
Document Sharing Hub

© ISO 2015 – All rights reserved

Full document details: BS EN ISO 15118-3:2016

According to that ID recognition, the EVSE will decide whether to authorize the charge or to not authorize the charge.

7.5 Loss of communication

This Clause covers the situation where the communication link is lost. A loss of communication after the establishment of a data link [D-LINK_READY.indication(link established) was already indicated] is handled by higher layers, by requesting with D-LINK_ERROR.request.

[V2G3-M07-03] If a data link was established and a D-LINK_READY.indication(link established) was already indicated to higher layers, any detected loss of the data link shall cause a D-LINK_READY.indication(no link) indication to higher layers.

7.5.1 EVSE side

[V2G3-M07-04] With receiving a D-LINK_ERROR.request from HLE in X1 state, the EVSE's communication node shall perform a state X1 to state E/F to state X1 or X2 transition.

7.5.1.1 Error handling with a Control Pilot duty cycle of 5 %

[V2G3-M07-05] With receiving a D-LINK_ERROR.request in X2 state from HLE, the EVSE's communication node shall perform a state X2 to X1 to state E/F to state X1 or X2 transition.

[V2G3-M07-06] Within the control pilot state X1, the communication node shall leave the logical network and change the matching state to "Unmatched".

[V2G3-M07-07] With reaching the state "Unmatched", the EVSE shall switch to state E/F.

[V2G3-M07-08] The state E/F shall be applied at least T_step_EF.

[V2G3-M07-09] After applying state E/F, the EVSE shall switch to contol pilot state X1 or X2 as soon as the EVSE is ready for incoming matching requests.

7.5.1.2 Error handling with nominal control pilot duty cycle

[V2G3-M07-10] With receiving a D-LINK_ERROR.request from HLE, the EVSE's communication node shall implement one of the two following options:

Option A: to have behaviour independent of the duty cycle:

[V2G3-M07-11] The requirements of 7.5.1.1 shall be applied to have behaviour independent of the duty cycle.

Option B: not to interrupt charging due to a control pilot state change to state E:

[V2G3-M07-12] With receiving a D-LINK_ERROR.request from HLE, the EVSE's communication node shall stay in X2 control pilot state, leave the logical network within TP_match_leave, and change the matching state to "Unmatched" to be ready for a new matching process.

7.5.2 EV side

If the EV detects a loss of communication, it can either switch to basic charging mode or stop the charge. While relaunching the matching process, the EV may go on charging in the basic charging mode, if the EVSE sets a nominal duty cycle.

NOTE The matching process after a loss of communication is exactly the same as during a plug-in phasis.

© ISO 2015 – All rights reserved
Documents
Document Sharing Hub
Full document details: BS EN ISO 15118-3:2016

7.5.2.1 Error handling with control pilot duty cycle of 5 %

[V2G3-M07-13] With receiving a D-LINK_ERROR.request from HLE, the EV's communication node shall change to Bx state, leave the logical network and change the matching state to "Unmatched" within TP_match_leave and wait for a new incoming matching trigger (control pilot X1 or X2 state).

7.5.2.2 Error handling with nominal control pilot duty cycle

[V2G3-M07-14] With receiving a D-LINK_ERROR.request from HLE, the EV's communication node shall implement one of the two following options:

Option A: to have behaviour independent of the duty cycle:

[V2G3-M07-15] The requirements of 7.5.2.1 shall be applied to have behaviour independent of the duty cycle.

Option B: not to interrupt charging due to a control pilot state change to state E:

[V2G3-M07-16] With receiving a D-LINK_ERROR.request from HLE, the EV's communication node shall keep the current state and leave the logical network and change the matching state to "unmatched".

[V2G3-M07-17] T_conn_resetup after the condition in [V2G3-M07-16] is met; the EV shall restart the Matching process.

[V2G3-M07-18] During the T_conn_resetup waiting state according to [V2G3-M07-17], the EV shall be prepared to be forced to restart by an EVSE, which has implemented option A according to [V2G3-M07-10].

7.6 Sleep mode and wake-up

A sleep mode is used for energy saving. EV and EVSE can enter a sleep mode after negotiating a pause through HLC protocol.

On the EVSE side, a sleep mode means that the oscillator will be off (X1 Control Pilot state), the +12V supply of the pilot line will stay on, and the low-layer communication module may be powered off.

On the EV side, a sleep mode means state B and the low-layer communication module may be powered off. The wake-up mechanisms may also be used after charge session was already terminated to allow the counterpart station to reestablish HLC.

7.6.1 Entering the sleep mode

[V2G3-M07-19] With receiving a D-LINK_PAUSE.request, the EV shall change to control pilot state Bx. Unpowering the low-layer communication module is optional. The logical network parameter set shall be stored for continuing the data link after the sleeping phase.

[V2G3-M07-20] With receiving a D-LINK_PAUSE.request, the EVSE shall switch to control pilot state X1 and may switch the low-layer communication module into low-power mode. The logical network parameter set shall be stored for continuing the data link after the sleeping phase.

7.6.2 Wake-up

[V2G3-M07-21] As soon as the lower layers detect a data link after a wake-up, it shall send a D-LINK_READY.indication(link established) to HLE.

© ISO 2015 – All rights reserved

Documents
Document Sharing Hub
Full document details: BS EN ISO 15118-3:2016