BS EN ISO 15118-5:2019
Incorporating corrigendum August 2018

BSI Standards Publication

Road vehicles - Vehicle to grid communication interface

Part 5: Physical layer and data link layer conformance test

Documents
Document Sharing Hub

Full document details: BS EN ISO 15118-5:2019

National foreword

This British Standard is the UK implementation of EN ISO 15118-5:2019. It is identical to ISO 15118-5:2018.

The UK participation in its preparation was entrusted to Technical Committee PEL/69, Electric vehicles.

A list of organizations represented on this committee can be obtained on request to its secretary.

This publication does not purport to include all the necessary provisions of a contract. Users are responsible for its correct application.

© The British Standards Institution 2019
Published by BSI Standards Limited 2019

ISBN 978 0 539 00494 6

ICS 43.120

Compliance with a British Standard cannot confer immunity from legal obligations.

This British Standard was published under the authority of the Standards Policy and Strategy Committee on 31 March 2018.

Amendments/corrigenda issued since publication

Date	Text affected
31 August 2018	Implementation of ISO corrected text May 2018: see ISO Foreword for details
28 February 2019	This corrigendum renumbers BS ISO 15118-5:2018 as BS EN ISO 15118-5:2019

Documents
Document Sharing Hub

Full document details: BS EN ISO 15118-5:2019

EUROPEAN STANDARD

NORME EUROPÉENNE

EUROPÄISCHE NORM

EN ISO 15118-5

February 2019

ICS 43.120

English Version

Road vehicles - Vehicle to grid communication interface - Part 5: Physical layer and data link layer conformance test (ISO 15118-5:2018)

Véhicules routiers - Interface de communication entre véhicule et réseau électrique - Partie 5: Essai de conformité relatif à la couche physique et à la couche liaison de données (ISO 15118-5:2018)

This European Standard was approved by CEN on 28 December 2018.

CEN members are bound to comply with the CEN/CENELEC Internal Regulations which stipulate the conditions for giving this European Standard the status of a national standard without any alteration. Up-to-date lists and bibliographical references concerning such national standards may be obtained on application to the CEN-CENELEC Management Centre or to any CEN member.

This European Standard exists in three official versions (English, French, German). A version in any other language made by translation under the responsibility of a CEN member into its own language and notified to the CEN-CENELEC Management Centre has the same status as the official versions.

CEN members are the national standards bodies of Austria, Belgium, Bulgaria, Croatia, Cyprus, Czech Republic, Denmark, Estonia, Finland, Former Yugoslav Republic of Macedonia, France, Germany, Greece, Hungary, Iceland, Ireland, Italy, Latvia, Lithuania, Luxembourg, Malta, Netherlands, Norway, Poland, Portugal, Romania, Serbia, Slovakia, Slovenia, Spain, Sweden, Switzerland, Turkey and United Kingdom.

EUROPEAN COMMITTEE FOR STANDARDIZATION
COMITÉ EUROPÉEN DE NORMALISATION
EUROPÄISCHES KOMITEE FÜR NORMUNG

CEN-CENELEC Management Centre: Rue de la Science 23, B-1040 Brussels

© 2019 CEN All rights of exploitation in any form and by any means reserved worldwide for CEN national Members.

Ref. No. EN ISO 15118-5:2019 E

Documents
Document Sharing Hub

Full document details: BS EN ISO 15118-5:2019

European foreword

The text of ISO 15118-5:2018 has been prepared by Technical Committee ISO/TC 22 "Road vehicles" of the International Organization for Standardization (ISO) and has been taken over as EN ISO 15118-5:2019 by Technical Committee CEN/TC 301 "Road vehicles" the secretariat of which is held by AFNOR.

This European Standard shall be given the status of a national standard, either by publication of an identical text or by endorsement, at the latest by August 2019, and conflicting national standards shall be withdrawn at the latest by August 2019.

Attention is drawn to the possibility that some of the elements of this document may be the subject of patent rights. CEN shall not be held responsible for identifying any or all such patent rights.

This document has been prepared under a mandate given to CEN by the European Commission and the European Free Trade Association.

According to the CEN-CENELEC Internal Regulations, the national standards organizations of the following countries are bound to implement this European Standard: Austria, Belgium, Bulgaria, Croatia, Cyprus, Czech Republic, Denmark, Estonia, Finland, Former Yugoslav Republic of Macedonia, France, Germany, Greece, Hungary, Iceland, Ireland, Italy, Latvia, Lithuania, Luxembourg, Malta, Netherlands, Norway, Poland, Portugal, Romania, Serbia, Slovakia, Slovenia, Spain, Sweden, Switzerland, Turkey and the United Kingdom.

Endorsement notice

The text of ISO 15118-5:2018 has been approved by CEN as EN ISO 15118-5:2019 without any modification.

Documents
Document Sharing Hub
Full document details: BS EN ISO 15118-5:2019

Contents

Foreword ... vii
Introduction ... viii
1 Scope ... 1
2 Normative references ... 2
3 Terms and definitions ... 2
4 Symbols (and abbreviated terms) ... 7
5 Conventions ... 8
5.1 Requirement structure ... 8
5.2 Test system description ... 8
6 Test architecture reference model ... 8
6.1 General information ... 8
6.2 Platform adapter interface ... 9
6.3 SUT adapter interfaces ... 9
6.4 Codecs ... 10
7 Test suite conventions ... 10
7.1 General information ... 10
7.2 Test suite structure (TSS) ... 10
7.3 Test profiles ... 12
7.3.1 Test configurations ... 12
7.3.2 Components and ports ... 13
7.3.3 Protocol implementation conformance statement (PICS) definition ... 14
7.3.4 Protocol implementation extra information for testing (PIXIT) definition ... 15
7.3.5 Test control ... 17
Table 12 — SECC AC PICS/PIXIT configuration ... 17
Table 13 — SECC DC PICS/PIXIT configuration ... 18
Table 14 — EVCC AC PICS/PIXIT configuration ... 19
Table 15 — EVCC DC PICS/PIXIT configuration ... 20
7.4 Test suite identifiers ... 22
7.4.1 Module identifiers ... 22
7.4.2 Test case identifiers ... 22
7.4.3 Template identifiers ... 24
7.4.4 Function identifiers ... 25
7.4.5 Timer identifiers ... 26
7.4.6 PICS/PIXIT identifiers ... 26
7.4.7 Verdict identifiers ... 27
7.5 Test suite coverage ... 27
Table 29 — ATS coverage of requirements in ISO 15118-3 ... 28
Table 30 — Groups for a simplified TC Id representation (see Table 29) ... 46
7.6 Test case description ... 56
7.7 Test case specification ... 57
7.7.1 Data types ... 57
7.7.2 Templates ... 57
7.7.3 Timeouts and timers ... 58
7.7.4 Library functions ... 58

© ISO 2018 – All rights reserved

Full document details: BS EN ISO 15118-5:2019

7.7.5 Test case modelling ... 58
7.7.6 SLAC Message handling for different SUT types ... 59
7.7.7 IEC 61851-1 PWM event handling and control ... 59
7.7.8 Data link status control functionality ... 61
7.7.9 EIM status control functionality ... 61
7.7.10 Transmission power limitation functionality ... 61
7.7.11 Attenuator injection functionality ... 61

8 Test case descriptions for ISO 15118-3 HPGP PLC signal measurement ... 62
8.1 General information ... 62
8.2 Test case for PLC signal measurement for ISO 15118-3 ... 62
8.3 SECC + PLC bridge test cases ... 62
8.3.1 SECC test cases for CmSlacParm ... 62
8.3.2 SECC test cases for AttenuationCharacterization ... 69
8.3.3 SECC test cases for CmValidate ... 79
8.3.4 SECC test cases for CmSlacMatch ... 86
8.3.5 SECC test cases for PLCLinkStatus ... 98
8.3.6 SECC test cases for CmAmpMap ... 110
8.4 EVCC + PLC bridge test cases ... 114
8.4.1 EVCC test cases for CmSlacParm ... 114
8.4.2 EVCC test cases for AttenuationCharacterization ... 122
8.4.3 EVCC test cases for CmValidate ... 130
8.4.4 EVCC test cases for CmValidateOrCmSlacMatch ... 142
8.4.5 EVCC test cases for CmSlacMatch ... 142
8.4.6 EVCC test cases for PLCLinkStatus ... 148
8.4.7 EVCC test cases for CmAmpMap ... 159

Annex A (normative) Configuration specifications ... 164

A.1 Timer configuration ... 164

A.2 PICS configuration ... 165

A.3 PIXIT configuration ... 165

Annex B (normative) Control part specification ... 167

B.1 SECC control parts ... 167

B.1.1 AC specific control parts ... 167

B.1.2 DC specific control parts ... 172

B.2 EVCC control parts ... 177

B.2.1 AC specific control parts ... 177

B.2.2 DC specific control parts ... 181

Annex C (normative) Test-case specifications for 15118-3 ... 186

C.1 SECC + PLC bridge test cases ... 186

C.1.1 SECC test cases for CmSlacParm ... 186

C.1.2 SECC test cases for AttenuationCharacterization ... 190

C.1.3 SECC test cases for CmValidate ... 197

C.1.4 SECC test cases for CmSlacMatch ... 202

C.1.5 SECC test cases for PLCLinkStatus ... 209

C.1.6 SECC test cases for CmAmpMap ... 212

C.2 EVCC + PLC bridge test cases ... 214

AVA Documents
Document Sharing Hub

© ISO 2018 – All rights reserved

Full document details: BS EN ISO 15118-5:2019

C.2.1 EVCC test cases for CmSlacParm ... 214
C.2.2 EVCC test cases for AttenuationCharacterization ... 219
C.2.3 EVCC test cases for CmValidate ... 224
C.2.4 EVCC test cases for CmValidateOrCmSlacMatch ... 232
C.2.5 EVCC test cases for CmSlacMatch ... 232
C.2.6 EVCC test cases for PLCLinkStatus ... 236
C.2.7 EVCC test cases for CmAmpMap ... 244
Annex D (normative) Function specifications for supporting test execution ... 248
D.1 Configuration functions ... 248
D.2 Pre-condition functions ... 250
D.2.1 SECC + PLC bridge functions ... 250
D.2.2 EVCC + PLC bridge functions ... 253
D.3 Post-condition functions ... 256
D.3.1 SECC + PLC bridge functions ... 256
D.3.2 EVCC + PLC bridge functions ... 257
D.4 Library functions ... 257
Annex E (normative) Function specifications for 15118-3 ... 259
E.1 SECC + PLC bridge functions ... 259
E.1.1 SECC functions for CmSlacParm ... 259
E.1.2 SECC functions for AttenuationCharacterization ... 266
E.1.3 SECC functions for CmValidate ... 281
E.1.4 SECC functions for CmSlacMatch ... 298
E.1.5 SECC functions for CmSetKey ... 303
E.1.6 SECC functions for PLCLinkStatus ... 304
E.1.7 SECC functions for CmAmpMap ... 313
E.2 EVCC + PLC bridge functions ... 318
E.2.1 EVCC functions for CmSlacParm ... 319
E.2.2 EVCC functions for AttenuationCharacterization ... 324
E.2.3 EVCC functions for CmValidate ... 346
E.2.4 EVCC functions for CmValidateOrCmSlacMatch ... 367
E.2.5 EVCC functions for CmSlacMatch ... 370
E.2.6 EVCC functions for CmSetKey ... 373
E.2.7 EVCC functions for PLCLinkStatus ... 373
E.2.8 EVCC functions for CmAmpMap ... 379
Annex F (normative) Template specifications for 15118-3 ... 385
F.1 Common + PLC bridge templates ... 385
F.1.1 CMN templates for CmSlacParm ... 386
F.1.2 CMN templates for CmStartAttenCharInd ... 387

AVA Documents
Document Sharing Hub

© ISO 2018 – All rights reserved
Full document details: BS EN ISO 15118-5:2019

F.1.3 CMN templates for CmMnbcSoundInd ... 387
F.1.4 CMN templates for CmAttenCharRsp ... 387
F.1.5 CMN templates for CmValidate ... 388
F.1.6 CMN templates for CmSlacMatch ... 389
F.1.7 CMN templates for CmSetKey ... 390
F.1.8 CMN templates for CmAmpMap ... 391
F.1.9 CMN templates for CmNwStats ... 394
F.2 SECC + PLC bridge templates ... 394
F.2.1 SECC templates for CmAttenCharInd ... 395
F.3 EVCC + PLC bridge templates ... 395
F.3.1 EVCC templates for CmAttenProfileInd ... 395
F.3.2 EVCC templates for CmAttenCharInd ... 395
Annex G (normative) Data type definitions ... 397
G.1 Data types for PICS ... 397
G.2 Data types for PIXIT ... 397
G.3 Data types for SLAC ... 398
Bibliography ... 403

© ISO 2018 – All rights reserved

Documents
Document Sharing Hub
Full document details: BS EN ISO 15118-5:2019

Foreword

ISO (the International Organization for Standardization) is a worldwide federation of national standards bodies (ISO member bodies). The work of preparing International Standards is normally carried out through ISO technical committees. Each member body interested in a subject for which a technical committee has been established has the right to be represented on that committee. International organizations, governmental and non-governmental, in liaison with ISO, also take part in the work. ISO collaborates closely with the International Electrotechnical Commission (IEC) on all matters of electrotechnical standardization.

The procedures used to develop this document and those intended for its further maintenance are described in the ISO/IEC Directives, Part 1. In particular the different approval criteria needed for the different types of ISO documents should be noted. This document was drafted in accordance with the editorial rules of the ISO/IEC Directives, Part 2 (see www.iso.org/directives).

Attention is drawn to the possibility that some of the elements of this document may be the subject of patent rights. ISO shall not be held responsible for identifying any or all such patent rights. Details of any patent rights identified during the development of the document will be in the Introduction and/or on the ISO list of patent declarations received (see www.iso.org/patents).

Any trade name used in this document is information given for the convenience of users and does not constitute an endorsement.

For an explanation on the voluntary nature of standards, the meaning of ISO specific terms and expressions related to conformity assessment, as well as information about ISO's adherence to the World Trade Organization (WTO) principles in the Technical Barriers to Trade (TBT) see the following URL: www.iso.org/iso/foreword.html

This document was prepared jointly by Technical Committee ISO/TC 22, *Road vehicles*, Subcommittee SC 31, *Data communication*, and Technical Committee IEC/TC 69, *Electric road vehicles and electric industrial trucks*. The draft was circulated for voting to the national bodies of both ISO and IEC.

A list of all parts in the ISO 15118 series can be found on the ISO website.

This corrected version of ISO 18541-6:2018 incorporates the following corrections:

— the foreword has been revised to indicate joint development with IEC/TC 69, *Electric road vehicles and electric industrial trucks*.

Documents
Document Sharing Hub

© ISO 2018 – All rights reserved
Full document details: BS EN ISO 15118-5:2019

Introduction

The first two parts of ISO 15118 describe the use cases and the technical specification of the Vehicle-to-Grid Communication Interface which is intended for the optimized use of energy resources so that electric road vehicles can recharge in the most economic or most energy efficient way. It is furthermore required to develop efficient and convenient billing systems in order to cover micro-payments resulting from charging processes. The necessary communication channel may serve in the future to contribute to the stabilization of the electrical grid, as well as to support additional information services required to operate electric vehicles efficiently and economically.

Resulting from the physical and data link layer requirements defined in the third part of the standard, a corresponding set of test cases are required in order to verify conformance of implementations. This document therefore defines a conformance test suite for the physical and data link layer protocols in order to derive a common and agreed basis for conformance tests. The resulting test suite is a necessary prerequisite for downstream interoperability tests. Since interoperability furthermore involves the actual application logic of an implementation, those tests are beyond the scope of this document. Hence this document focuses on the interface aspects and the corresponding requirements given in part three only.

Documents
Document Sharing Hub

© ISO 2018 – All rights reserved

Full document details: BS EN ISO 15118-5:2019

Road vehicles — Vehicle to grid communication interface — Part 5: Physical and data link layer conformance tests

1 Scope

This document specifies conformance tests in the form of an Abstract Test Suite (ATS) for a System Under Test (SUT) implementing an Electric Vehicle or Supply Equipment Communication Controller (EVCC or SECC) with support for PLC-based High Level Communication (HLC) and Basic Signaling according to ISO 15118-3. These conformance tests specify the testing of capabilities and behaviors of an SUT, as well as checking what is observed against the conformance requirements specified in ISO 15118-3 and against what the implementer states the SUT implementation's capabilities are.

The capability tests within the ATS check that the observable capabilities of the SUT are in accordance with the static conformance requirements defined in ISO 15118-3. The behavior tests of the ATS examine an implementation as thoroughly as is practical over the full range of dynamic conformance requirements defined in ISO 15118-3 and within the capabilities of the SUT (see NOTE 1).

A test architecture is described in correspondence to the ATS. The conformance test cases in this part of the standard are described leveraging this test architecture and are specified in TTCN-3 Core Language for the ISO/OSI Physical and Data Link Layers (Layers 1 and 2). The conformance test cases for the ISO/OSI Network Layer (Layer 3) and above are described in ISO 15118-4.

In terms of coverage, this document only covers normative sections and requirements in ISO 15118-3. This document can additionally include specific tests for requirements of referenced standards (e.g. IEEE, or industry consortia standards) as long as they are relevant in terms of conformance for implementations according to ISO 15118-3. However, it is explicitly not intended to widen the scope of this conformance specification to such external standards, if it is not technically necessary for the purpose of conformance testing for ISO 15118-3. Furthermore, the conformance tests specified in this document do not include the assessment of performance nor robustness or reliability of an implementation. They cannot provide judgments on the physical realization of abstract service primitives, how a system is implemented, how it provides any requested service, nor the environment of the protocol implementation. Furthermore, the test cases defined in this document only consider the communication protocol and the system's behavior defined ISO 15118-3. Power flow between the EVSE and the EV is not considered.

NOTE 1 Practical limitations make it impossible to define an exhaustive test suite, and economic considerations can restrict testing even further. Hence, the purpose of this document is to increase the probability that different implementations are able to interwork. This is achieved by verifying them by means of a protocol test suite, thereby increasing the confidence that each implementation conforms to the protocol specification. However, the specified protocol test suite cannot guarantee conformance to the specification since it detects errors rather than their absence. Thus conformance to a test suite alone cannot guarantee interworking. What it does do is give confidence that an implementation has the required capabilities and that its behavior conforms consistently in representative instances of communication.

NOTE 2 This document has some interdependencies to the conformance tests defined in ISO 15118-4 which result from ISO/OSI cross layer dependencies in the underlying protocol specification (e.g. for sleep mode)

© ISO 2018 – All rights reserved

AVA Documents Document Sharing Hub

Full document details: BS EN ISO 15118-5:2019

2 Normative references

The following documents are referred to in the text in such a way that some or all of their content constitutes requirements of this document. For dated references, only the edition cited applies. For undated references, the latest edition of the referenced document (including any amendments) applies.

IEC 61851-1:2017, *Electric vehicle conductive charging system — Part 1: General requirements (Ed 3.0, 2017)*

ISO 15118-1:2013, *Road vehicles — Vehicle to grid communication interface — Part 1: General information and use-case definition*

ISO 15118-2:2014, *Road vehicles — Vehicle-to-Grid Communication Interface — Part 2: Network and application protocol requirements*

ISO 15118-3:2015, *Road vehicles — Vehicle to grid communication interface — Part 3: Physical and data link layer requirements*

ETSI ES 201 873-5 V4.6.1, *TTCN-3: TTCN-3 Runtime Interface (June 2014)*

ETSI ES 201 873-6 V4.6.1, *TTCN-3: TTCN-3 Control Interface (June 2014)*

HomePlug Green PHY Specification, release version 1.1.1, July 4, 2013

NOTE 1 Even though ISO 15118-3:2015, which is the baseline for this conformance test document, explicitly references IEC 61851-1:2011, this document references IEC 61851-1:2017 because of applicability on the market.

3 Terms and definitions

For the purpose of this document, the terms and definitions given in ISO 15118-1, ISO 15118-2, ISO 15118-3 and the following apply.

ISO and IEC maintain terminological databases for use in standardization at the following addresses:

— IEC Electropedia: available at http://www.electropedia.org/

— ISO Online browsing platform: available at https://www.iso.org/obp

3.1
abstract test case
complete and independent specification of the actions required to achieve a specific test purpose

Note 1 to entry: This specification is defined at the level of abstraction of a particular Abstract Test Method, starting in a stable testing state and ending in a stable testing state and may involve one or more consecutive or concurrent connections.

Note 2 to entry: The specification should be complete in the sense that it is sufficient to enable a test verdict to be assigned unambiguously to each potentially observable test outcome (i.e. sequence of test events).

Note 3 to entry: The specification should be independent in the sense that it should be possible to execute the derived executable test case in isolation from other such test cases (i.e. the specification should always include the possibility of starting and finishing in the "idle" state).

Note 4 to entry: Compare with ITU-T X.290.

3.2
abstract test suite
ATS
test suite composed of abstract test cases

© ISO 2018 – All rights reserved

Documents
Document Sharing Hub
Full document details: BS EN ISO 15118-5:2019

Note 1 to entry: Compare with ITU-T X.290.

3.3
black box testing
method of testing that examines the behavior of an SUT without considering the internal implementation and structure of the SUT, thus relying on the SUT's open interface for testing

3.4
conformance requirements
conformance of a real system consisting of conformance to each requirement and conformance to the set

Note 1 to entry: Set of interrelated requirements which together define the behavior of the system and its communication. Conformance of a real system will, therefore, be expressed at two levels, conformance to each individual requirement and conformance to the set. Applicable ISO 15118-4 conformance tests include requirements and transfer syntax requirements as far as they can be validated by black box testing.

Note 2 to entry: See also *static conformance requirements* (3.20) and *dynamic conformance requirements* (3.6).

3.5
conforming implementation
IUT which satisfies both static and dynamic conformance requirements, consistent with the capabilities stated in the PICS(s)

Note 1 to entry: Compare with ITU-T X.290.

3.6
dynamic conformance requirements
one of the requirements which specifies what observable behavior is permitted by the relevant specification(s) in instances of communication

Note 1 to entry: The requirements for this conformance specification are defined in ISO 15118-3.

Note 2 to entry: Compare with ITU-T X.290.

3.7
executable test case
realization of an abstract test case

Note 1 to entry: Compare with ITU-T X.290.

3.8
expected behavior
exact response of the SUT according to the underlying protocol specification to the stimulus defined in the test behavior

3.9
implementation conformance statement
ICS
statement made by the supplier of an implementation or system claimed to conform to a given specification, stating which capabilities have been implemented

Note 1 to entry: The given specification for this conformance specification is ISO 15118-3.

Note 2 to entry: Compare with ITU-T X.290.

3.10

© ISO 2018 – All rights reserved

Documents
Document Sharing Hub
Full document details: BS EN ISO 15118-5:2019

implementation extra information for testing
IXIT
statement made by a supplier or implementer of an IUT which contains or references all of the information (in addition to that given in the ICS) related to the IUT and its testing environment, which will enable the test laboratory to run an appropriate test suite against the IUT

Note 1 to entry: Compare with ITU-T X.290.

3.11
implementation under test
IUT
implementation of one or more OSI protocols in an adjacent user/provider relationship, being that part of a real open system which is to be studied by testing

Note 1 to entry: Compare with ITU-T X.290.

3.12
main test component
MTC
single test component in a test component configuration responsible for creating and controlling *parallel test components* and computing and assigning the test verdict

Note 1 to entry: Compare with ITU-T X.292.

3.13
parallel test component
PTC
test component created by the main test component

Note 1 to entry: Compare with ITU-T X.292.

3.14
post-condition
test steps needed to define the path from the end of the *test behavior* up to the finishing stable state for the test case

Note 1 to entry: See also *test behavior* (3.23).

3.15
pre-condition
test steps needed to define the path from the starting stable state of the test case up to the initial state from which the *test bevavior* will start

Note 1 to entry: See also *test behavior* (3.23).

3.16
protocol implementation conformance statements
PICS
ICS for an implementation or system claimed to conform to a given protocol specification

Note 1 to entry: The given protocol specification for this conformance specification is ISO 15118-3.

Note 2 to entry: Compare with ITU-T X.290.

3.17
protocol implementation extra information for testing
PIXIT

Documents
Document Sharing Hub
© ISO 2018 – All rights reserved
Full document details: BS EN ISO 15118-5:2019

IXIT related to testing for conformance to a given protocol specification

Note 1 to entry: The given protocol specification for this conformance specification is ISO 15118-3.

Note 2 to entry: Compare with ITU-T X.290.

3.18
runtime environment
environment that describes the operating system and corresponding platform requirements of a system

EXAMPLE *Test system*.

3.19
semantically invalid test behavior
SemITB
test steps where the test system sends stimuli to the SUT that are semantically invalid according to the protocol requirements

Note 1 to entry: This type of test behavior is defined in this document and explicitly includes requirements which define the appropriate error handling of the SUT.

3.20
static conformance requirements
one of the requirements that specify the limitations on the combinations of implemented capabilities permitted in a real open system which is claimed to conform to the relevant specification(s)

Note 1 to entry: Compare with ITU-T X.290.

3.21
system under test
SUT
real open system in which the IUT resides

Note 1 to entry: Compare with ITU-T X.290.

3.22
syntactically invalid test behavior
SynITB
test steps where the test system sends stimuli to the SUT that are syntactically invalid according to the protocol requirements

Note 1 to entry: This type of test behavior is not defined in this conformance standard, see codec requirements.

3.23
test behavior
set of test steps (test body) which are essential in order to achieve the test purpose and assign verdicts to the possible outcomes

3.24
test execution
interpretation or execution of an abstract test suite

Note 1 to entry: Conceptually, the TE can be decomposed into three interacting entities: an Executable Test Suite (ETS), a Test Framework (TFW) and an optional internal Encoding/Decoding System (EDS) entity.

Note 2 to entry: See also ETSI ES 201 873-5 V4.6.1.

© ISO 2018 – All rights reserved

Documents
Document Sharing Hub
Full document details: BS EN ISO 15118-5:2019

3.25
test framework
TFW
entity to perform all actions of test cases or functions

Note 1 to entry: The Test Framework interacts with the Test Management (TM), SUT Adaptor (SA) and Platform Adaptor (PA) entities via Test Control Interface (TCI) and Test Runtime Interface (TRI) and additionally manages the Executable Test Suite (ETS) and Encoding/Decoding System (EDS) entities. It initializes adaptors as well as ETS and EDS entities. This entity performs all the actions necessary to properly start the execution of a test case or function with parameters in the ETS entity. It queries the TM entity for module parameter values required by the ETS and sends logging information to it. It also collects and resolves associated verdicts returned by the ETS entity.

Note 2 to entry: See also ETSI ES 201 873-5 V4.6.1.

Note 3 to entry: In this document, the Test Framework TTCN-3 Runtime System (T3RTS) is used to explain a Test Framework functionality.

3.26
test purpose
prose description of a well-defined objective of testing, focusing on a single conformance requirement or a set of related conformance requirements as specified in the appropriate OSI specification

EXAMPLE Verifying the support of a specific value of a specific parameter.

Note 1 to entry: Compare with ITU-T X.290.

3.27
test system
real system combining the test framework, abstract test suite, test execution and adapters as well as codecs

Note 1 to entry: Typically also containing a common runtime environment based on an operating system.

3.28
test control interface
TCI
four interfaces that define the interaction of the TTCN-3 Executable with the test management, the coding and decoding, the test component handling and the logging in a test system

Note 1 to entry: Compare with ITU-T X.290.

Note 2 to entry: Compare with ETSI ES 201 873-6 V4.6.1.

3.29
test runtime interface
TRI
two interfaces that define the interaction of the TTCN-3 Executable between the SUT and the Platform Adapter (PA) and the System Adapter (SA) in a test system

Note 1 to entry: Compare with ETSI ES 201 873-5 V4.6.1.

3.30
test system interface
TSI
test component that provides a mapping of the ports available in the (abstract) TTCN-3 test system to those offered by a real test system

© ISO 2018 – All rights reserved

Documents
Document Sharing Hub
Full document details: BS EN ISO 15118-5:2019

Note 1 to entry: Compare with ETSI ES 201 873-6 V4.6.1.

3.31
valid test behavior
VTB
test steps where the test system sends stimuli to the SUT that are valid (syntactically and semantically) according to the protocol requirements

Note 1 to entry: This type of test behavior is defined in this conformance document.

Note 2 to entry: The protocol requirements for this conformance specification are defined in ISO 15118-3.

3.32
verdict
test verdict
statement of "pass", "fail" or "inconclusive", as specified in an abstract test case, concerning conformance of an IUT with respect to that test case when it is executed

Note 1 to entry: Compare with ITU-T X.290.

4 Symbols (and abbreviated terms)

For the purposes of this document, the following abbreviations apply:

AC	Alternating Current
ATS	Abstract Test Suite
CPL	Control Pilot Line
DC	Direct Current
EIM	External Identification Means
ETSI	European Telecommunications Standards Institute
EV	Electric Vehicle
EVCC	Electric Vehicle Communication Controller
EVSE	Electric Vehicle Supply Equipment
HAL	Hardware Abstraction Layer
HPGP	HomePlug GreenPHY
ITB	Invalid Test Behavior
MME	Management Message Entry
MTC	Main Test Component
PICS	Protocol Implementation Conformance Statement
PIXIT	Protocol Implementation eXtra Information for Testing
PLC	Power Line Communication
PnC	Plug and Charge
PTC	Parallel Test Component
PWM	Pulse Width Modulation
SECC	Supply Equipment Communication Controller
SLAC	Signal Level Attenuation Characterization

© ISO 2018 – All rights reserved

Documents
Document Sharing Hub
Full document details: BS EN ISO 15118-5:2019

SUT	System Under Test
TC	Test Case
TCI	TTCN-3 Control Interface
TCI-CD	TCI-Coding and Decoding
TE	Test Execution
TFW	Test Framework
TP	Test Purpose
TRI	TTCN-3 Runtime Interface
TSI	TTCN-3 System Interface
TSS	Test Suite Structure
TTCN-3	Testing and Test Control Notation version 3
V2G	Vehicle-to-Grid
VTB	Valid Test Behavior

5 Conventions

5.1 Requirement structure

This document uses unique number identifiers for each individual requirement. This requirement structure allows for easier requirement tracking and management. The following format is used throughout this document:

"[V2G"Y"-"XXX"]" requirement text

Where:

— "V2G" represents the ISO 15118 set of standards;

— Y represents the document part of the ISO 15118 document set, for this document Y = 5;

— XXX represents the individual requirement number; and

— "requirement text" includes the actual text of the requirement.

5.2 Test system description

TTCN-3 is used in this document to define/specify the test system and the test cases inside the test suite. However, using TTCN-3 is not mandatory for the implementation of conformance tests for ISO 15118-3.

[V2G5-001] The implementers of conformance tests shall verify that the test objectives implemented in their environment are identical to those described in this document.

6 Test architecture reference model

6.1 General information

Figure 1 provides an overview on the test architecture for this document. The following subclauses define the interface requirements marked black in Figure 1 for platform and SUT adapters (see 6.2, 6.3) as well as the codecs (see 6.4). The Test Suite is defined in detail in the remainder of this document.

© ISO 2018 – All rights reserved

Full document details: BS EN ISO 15118-5:2019

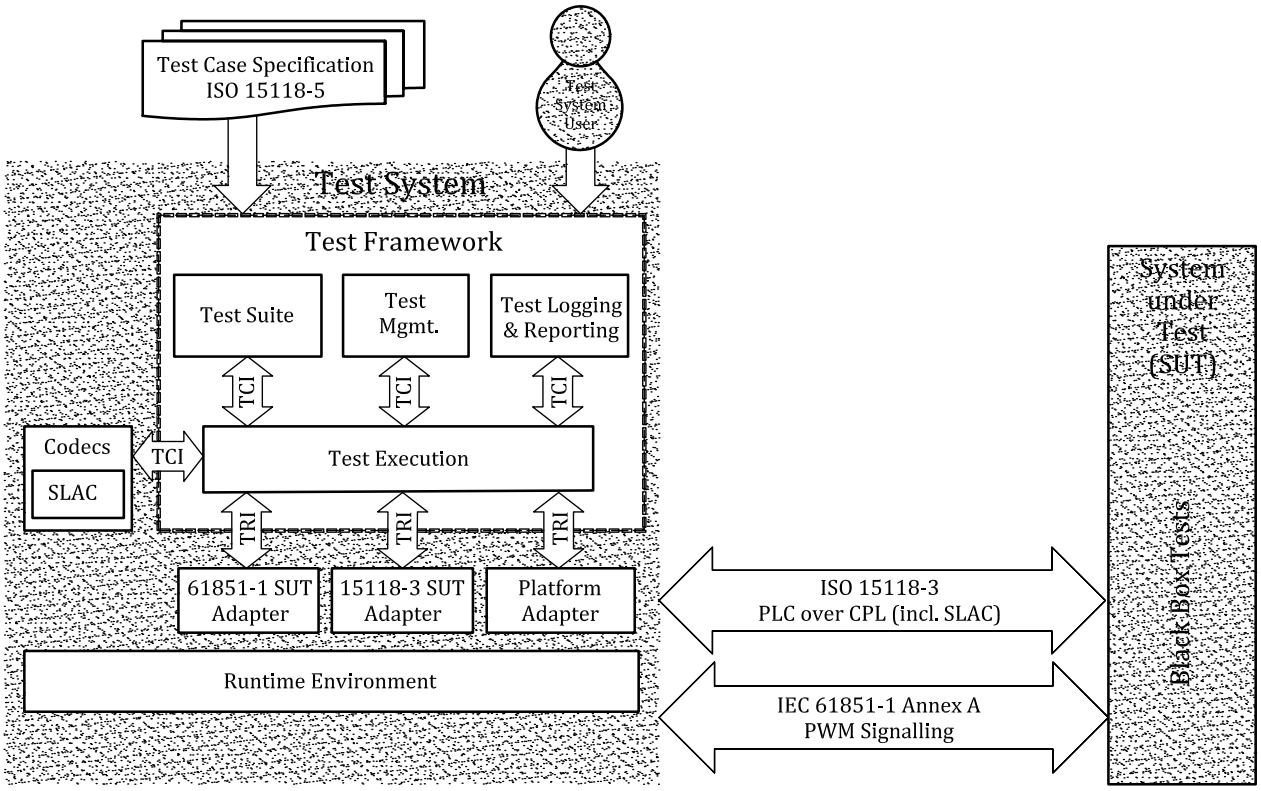

Figure 1 — Test architecture reference model for testing of ISO 15118-3

6.2 Platform adapter interface

The platform adapter within the test system is responsible for timers and external functions. Besides means for timers, which are typically provided as part of the test framework, no external functions are defined for ISO 15118 conformance testing.

[V2G5-002] The platform adapter of the test system shall implement the TriPlatformPA and the TriPlatformTE interfaces as defined in ETSI ES 201 873-5 V4.6.1, 6.5.3.

6.3 SUT adapter interfaces

The SUT adapter within the test system adapts the TTCN-3 communication operations to the SUT based on an abstract test system interface and implements the real test system interface. It is responsible to propagate message requests and procedure based calls from the Test Execution (see Figure 1) to the SUT, and to notify the Test Execution of any received test events by appending them to its port queues.

[V2G5-003] The SUT adapters of the test system shall implement the TriCommunicationSA and the TriCommunicationTE interfaces as defined in ETSI ES 201 873-5 V4.6.1, 6.5.2.

NOTE 1 The actual implementation of these adapters is out of scope of this document.

[V2G5-004] The IEC 61851-1 SUT adapter shall adapt the HAL 61851-1 functions to a PWM Signal defined in 7.7.7.

[V2G5-005] The ISO 15118-3 SUT adapter shall send/receive the encoded SLAC request/response messages through raw Ethernet frames to/from the SUT as defined in ISO 15118-3:2015, A.6 and A.9.

NOTE 2 The IEC 61851-1 SUT adapter can need additional hardware for adapting the HAL 61851-1 functions to PWM Signalling according to IEC 61851-1:2017, Annex A.

© ISO 2018 – All rights reserved

Documents
Document Sharing Hub
Full document details: BS EN ISO 15118-5:2019

6.4 Codecs

A codec is responsible for the external encoding and decoding of TTCN-3 values into bit strings suitable to be sent to the SUT. The Test Execution (TE) determines which codec shall be used and passes the TTCN-3 data to the appropriate encoder to obtain the encoded data. Received data is decoded in this entity by using the appropriate decoder, which translates the received data into TTCN-3 values cf. ETSI ES 201 873-6 V4.6.1 that can be matched against expected values or templates.

[V2G5-006] All codecs in this document shall implement the TCI-CD interface as defined in ETSI ES 201 873-6 V4.6.1, 7.3.2.

NOTE 1 For ISO 15118-3 conformance testing the SLAC codec (see Figure 1) is used to encode or decode messages consumable by the tester into bit strings consumable by the SUT.

NOTE 2 The exact implementation of the SLAC codec is out of scope of this document.

[V2G5-007] The SLAC codec shall encode TTCN-3 values as defined in G.3 into corresponding MME frames as defined in ISO 15118-3:2015, A.9 and HomePlug GreenPHY Spec. 1.1.1, July 4, 2013.

[V2G5-008] The SLAC codec shall decode MME frames as defined in G.3 into TTCN-3 values as defined in ISO 15118-3:2015, A.9 and HomePlug GreenPHY Spec. 1.1.1, July 4, 2013.

7 Test suite conventions

7.1 General information

This clause defines all conventions that are relevant for conformance tests of SUTs implementing ISO 15118-3.

7.2 Test suite structure (TSS)

A test suite is a complete set of test cases, possibly combined into groups or modules (e.g. for use cases or domains like AC, DC charging), that are necessary to perform conformance testing for a given SUT.

In each test case, the SUT is stimulated with specific inputs and the reactions are observed and evaluated. Depending on the test purpose different pre-conditions and post-conditions shall be considered for the formulation of the test behavior. The pre-conditions, post-conditions as well as test behaviors are encapsulated into individual functions and stored within separate modules. Thus, a complete test case is composed by the actual test behavior enveloped by pre- and post-conditions (see 7.7.5 for details). The corresponding grouping of functions can therefore be assigned to the lowest abstract hierarchical level (see Figure 2). The test cases are defined on the second level.

© ISO 2018 – All rights reserved

Full document details: BS EN ISO 15118-5:2019

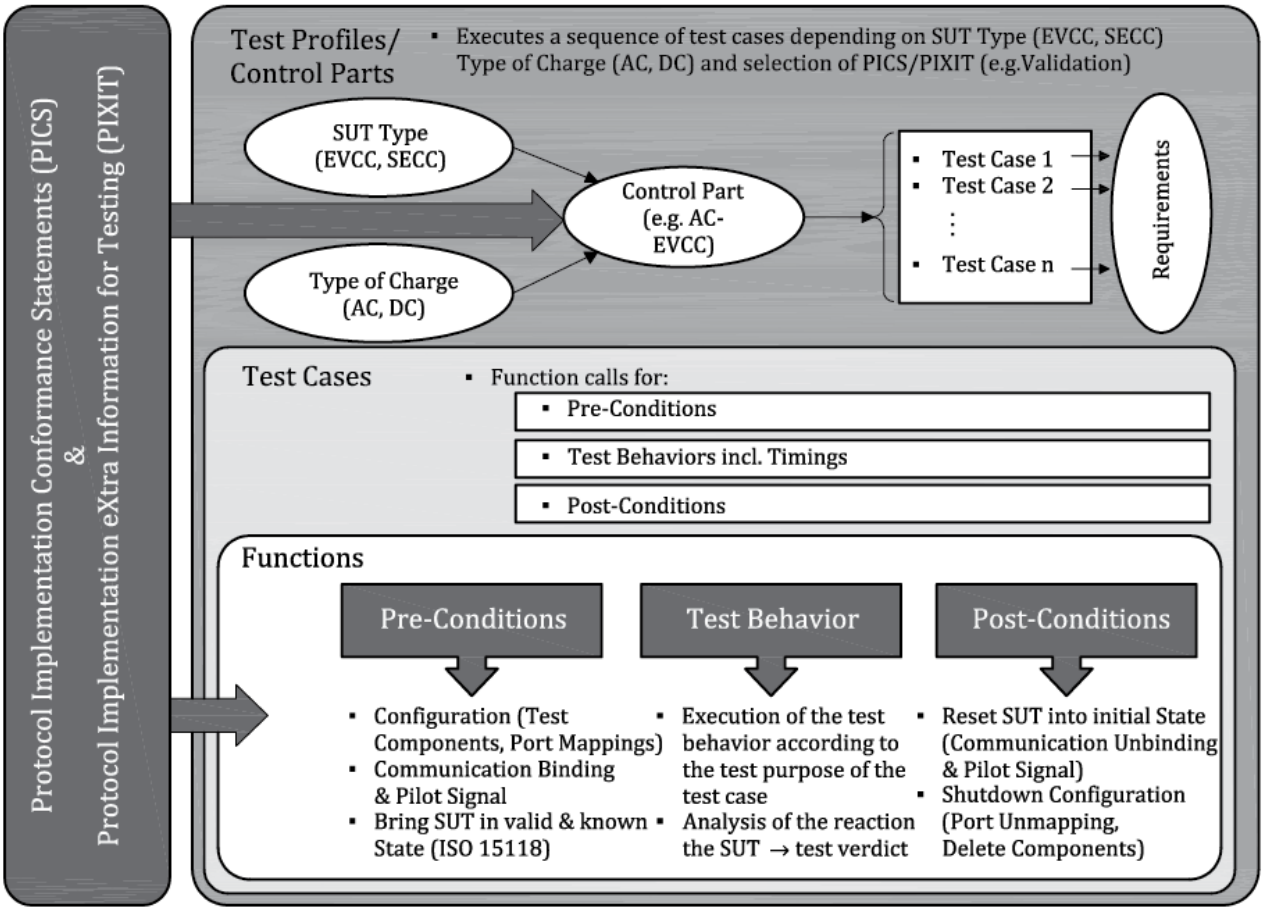

Figure 2 — General overview of the Test Suite Structure (TSS)

The test profile is a collection of self-contained test cases as well as PICS (see 7.3.3) and PIXIT (see 7.3.4) in order to represent a given use case. The selection is based on the use cases of the ISO 15118 standard and its corresponding requirements.

Hence the Test Suite Structure (TSS) is segmented into subgroups defined according to ISO 15118 use cases for conformance testing. Table 1 shows these subgroups, which are used for the organization of the test case specifications as well as for the test suite identifiers (see 7.4 for details).

Table 1 — Identifiers within the Test Suite Structure (TSS)

Identifiers	Values	Description
<sut>		System under Test
	EVCC	Electric Vehicle Communication Controller
	SECC	Supply Equipment Communication Controller
<dom>		Domain
	AC	AC specific behaviors
	DC	DC specific behaviors
	IN	Inductive specific behaviors
	CMN	Common behaviors
<ctx>	{fullname}	Context (e.g. name of message pattern signal name according to standard)

© ISO 2018 – All rights reserved

Documents
Document Sharing Hub
Full document details: BS EN ISO 15118-5:2019

NOTE 1 The domain for inductive charging is not relevant for this document but was is introduced for future purposes.

Table 2 describes the Annexes derived for this document.

Table 2 — Test suite structure — Annexes description

Annexes	Description
Configuration Annex A	The configuration annex contains constant definitions timers, PICS and PIXIT definitions. The configuration in Annex A shall be applied.
Control Part Annex B	The control part annex describes the execution order of modelled test cases (test groups). The EVCC control part subclauses contain the test groups if the SUT is an EVCC. The SECC control part subclauses contain the test groups if the SUT is an SECC. The control part in Annex B shall be followed.
Test Cases Annex C	The test case annexes contain the TTCN-3 test case files. The EVCC subclauses contain the test cases if the SUT is an EVCC. The SECC subclauses contain the test cases if the SUT is an SECC. The test cases in Annex C shall be considered.
Functions Annex D - E	The function annexes contain methods for supporting the test execution as well as the actual pre-, post-conditions and test behaviors of the ISO 15118 conformance tests. The EVCC subclauses contain the test behavior if the SUT is an EVCC. The SECC subclauses contain the test behavior if the SUT is an SECC. The Pre-condition subclause contains functions that are used for defining the pre-conditions of a test behavior. The Post-condition subclause contains functions that are used to establish the post-conditions of a test case. The Library Functions subclause contains utility functions used across the test suite for various purposes. The functions in Annex D and Annex E shall be considered.
Templates Annex F	The Templates subclause contains the TTCN-3 template files for matching a SUT's reaction on a stimulus against its expected behavior. The templates in Annex F shall be considered.
Data Structures Annex G	The Data Structures subclause contains data structures that are needed for testing of SLAC. The data structures in Annex G shall be considered.

7.3 Test profiles

This subclause defines test profiles for conformance with ISO 15118-3. A test profile consists of a test configuration as well as a selection and assignment of PICS/PIXIT. Depending on the test configuration a set of test components and ports are defined. The test profile furthermore includes a test group defining the set of relevant test cases and the sequence in which they are executed in order to perform a conformance test for a given use case.

7.3.1 Test configurations

The test configuration reflects various ISO 15118 scenarios. The main entities for the System Under Test (SUT) are:

— Electric Vehicle Communication Controller (EVCC); and

— Supply Equipment Communication Controller (SECC)

The combination of entities and additionally used test components are grouped by Test Configuration IDs (CF_Part_ID). Table 3 shows the test configurations for this document.

Table 3 — ISO 15118-5 test configurations

CF_Part_ID	SUT	Tester	PTCs
CF_05_001	SECC + PLC Bridge	EVCC + PLC Bridge	PTC1 = 61851
CF_05_002	EVCC + PLC Bridge	SECC + PLC Bridge	PTC1 = 61851

© ISO 2018 – All rights reserved

Full document details: BS EN ISO 15118-5:2019

7.3.2 Components and ports

In correspondence to the identified set of relevant test configurations this sub clause defines test components which reflect the main entities needed for stimulation of the SUT with respect to ISO 15118. Ports are used to connect these components with each other and the SUT. Port types define which kind of messages can be sent or received by this port. All relevant components and ports are defined in Table 4 and Table 5 respectively.

Table 4 — Component definitions

Components	Description
SECC_Tester (MTC)	This component type is the main type for the tests of an SECC. A SLAC_Port, HAL_61851_Port and a HAL_61851_Internal_Port (see Table 5) are assigned to this component type.
EVCC_Tester (MTC)	This component type is the main type for the tests of an EVCC. A SLAC_Port, HAL_61851_Port and a HAL_61851_Internal_Port (see Table 5) are assigned to this component type.
HAL_61851_Listener (PTC)	The HAL_61851_Listener is responsible for watching the correct IEC 61851 behavior and is used in the form of a parallel test component (PTC). This component uses the HAL_61851_Port (see Table 5) to communicate with an IEC 61851-1 SUT Adapter and the HAL_61851_Internal_Port to communicate with the MTC.

Table 5 — Port type definitions

Port Type	Description
SLAC_Port	This port is used to send/receive SLAC messages defined in ISO 15118-3 to/from the EVCC/SECC.
HAL_61851_Port	This port is used to interact with an IEC 61851 signalling unit. The unit will set the corresponding signalling to the SUT (SECC/EVCC). The specification of the IEC 61851 signalling unit is out of scope of this standard.
HAL_61851_Internal_Port	This port is used to synchronize the status of the IEC 61851-1 PWM signal between the MTC (SECC_Tester or EVCC_Tester) and PTC (HAL_61851_Listener_Port).

These components and ports compose relevant test configurations for this document. Whether the type EVCC_Tester or SECC_Tester is to be used as MTC depends on the type of the SUT.

[V2G5-009] If the SUT is an EVCC, the MTC shall use the type EVCC_Tester.

[V2G5-010] If the SUT is an SECC, the MTC shall use the type SECC_Tester.

The HAL_61851_Listener combines all necessary listener functionality into one component, independent on whether the MTC represents an SECC_Tester or an EVCC_Tester. The MTC always contains a TTCN-3 test configuration and delimits the lifeline during test execution. Next to using ports for communication purposes, local timers, variables or constants may be assigned to components to store dynamic information during test case execution.

In addition to the MTC and PTC and their corresponding port type definitions, a test configuration also consists of respective Test System Interfaces (TSI). An abstract Test System Interface (TSI) is specified as a collection of ports. A TSI has no local timers, constants or variables. Only ports are assigned to it. During the test case execution test components ports can be mapped dynamically to the TSI ports to establish communication channel to the real test system interface. In the test configuration the TSI uses the type System_EVCC or System_SECC depending on the type of the SUT. If the SUT is an EVCC, the TSI uses the type System_EVCC. If the SUT is an SECC, the TSI uses the type System_SECC.

The test configuration is illustrated in Figure 3. The type of the V2G components and ports (EVCC or SECC) depends on the SUT type.

© ISO 2018 – All rights reserved

Documents
Document Sharing Hub
Full document details: BS EN ISO 15118-5:2019

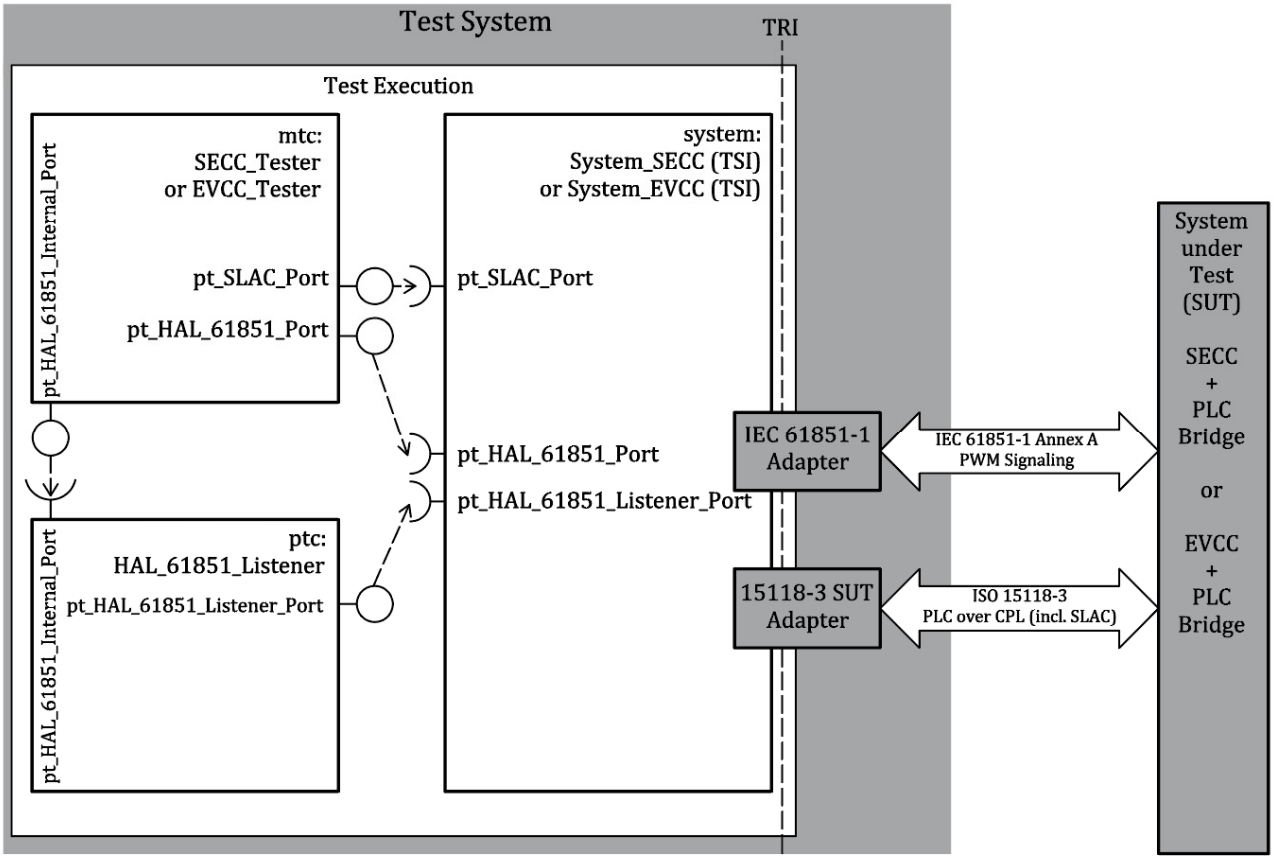

Figure 3 — ISO 15118-5 test configuration

As shown in Figure 3 the port mappings are defined statically as follows:

— The port pt_SLAC_Port of the TSI is always mapped to port pt_SLAC_Port of the MTC.

— The port pt_HAL_61851_Port of the TSI is always mapped to port pt_HAL_61851_Port of the MTC.

— The port pt_HAL_61851_Listener_Port of the TSI is always mapped to port pt_HAL_61851_Listener_Port of the v_HAL_61851_Listener. The pt_HAL_61851_Listener_Port is from the same type HAL_61851_Port as the pt_HAL_61851_Port.

— The internal port pt_HAL_61851_Internal_Port is not mapped to the TSI. This port is connected between the MTC and PTC.

7.3.3 Protocol implementation conformance statement (PICS) definition

To evaluate the conformance of a particular implementation, it is necessary to have a statement of the capabilities and options which have been implemented, and any features which have been omitted, so that the implementation can be tested for conformance against relevant requirements, and against those requirements only. Such a statement is called a Protocol Implementation Conformance Statement (PICS) cf. [ITU-T X.290].

All PICS defined in the ATS are summarized in Table 6, Table 7 and Table 8.

Table 6 — PICS for test system configurations CF_05_001 and CF_05_002 (SUT either SECC or EVCC)

PICS	Description
PICS_CMN_CMN_CombinedTesting	Indication for enabling combined testing including SLAC

© ISO 2018 – All rights reserved

Full document details: BS EN ISO 15118-5:2019

	association and V2G messaging
PICS_CMN_CMN_ChargingMode	Indication for testing either AC or DC charging mode
PICS_CMN_CMN_IdentificationMode	Indication for testing either EIM or PnC identification mode
PICS_CMN_CMN_PlugType	Indication for testing either type1 or type2 plug type
PICS_CMN_AC_CableCapability	Indication for used AC cable type Choice: i) capability13A, ii) capability20A, iii) capability32A, iv) capability63A, v) capability70A
PICS_CMN_CMN_InitiateCmAmpMap	Indication for initiating the Amplitude map process
PICS_CMN_CMN_WakeUp	Indication for the sleep time within a paused session
PICS_CMN_CMN_SlacTimeouts	Indication for enabling Test Group: SLAC timeouts
PICS_CMN_CMN_InvalidSlacDataFieldsAndMessages	Indication for enabling Test Group: Invalid SLAC data fields and messages
PICS_CMN_CMN_InvalidStatesAndDutyCycles	Indication for enabling Test Group: Invalid states and duty cycles

Table 7 — PICS for test system configuration CF_05_001 (SUT equals SECC)

PICS	Description
PICS_SECC_CMN_Pause	Indication for enabling a charging pause
PICS_SECC_CMN_EIMDone	Indication for initiating EIM Authorization process Choice: i) beforePlugin, ii) afterPlugin, iii) duringSlac, iv) v2gAuthorization

Table 8 — PICS for test system configuration CF_05_002 (SUT equals EVCC)

PICS	Description
PICS_EVCC_CMN_PmaxSchedulewithZeroPow	Indication for enabling a PmaxScheduleList with a list element pMax = 0W (triggering pause) Choice: i) sleepWithoutCharge, ii) sleepAfterCharge, iii) none_

7.3.4 Protocol implementation extra information for testing (PIXIT) definition

In order to ensure testability of ISO 15118-3 requirements depending on a specific behavior of the SUT, the following set of PIXIT is defined in addition to PICS in this document. PIXIT are used to indicate to the SUT that a specific capability of the SUT is tested.

NOTE 1 Due to the black box test paradigm in this document, it is not defined how to ensure that a corresponding PIXIT is set on the SUT side for a given test case execution.

All PIXIT defined in the ATS are summarized in Table 9 - Table 11.

Table 9 — Selected PIXIT for test system configurations CF_05_001 and CF_05_002 (SUT either SECC or EVCC)

PIXIT	Description
PIXIT_CMN_CMN_CmAmpMap	Indication for explicit testing of Amplitude map process
PIXIT_CMN_CMN_WakeUp	Indication for the wake-up time (SUT) within a paused session

© ISO 2018 – All rights reserved

Documents
Document Sharing Hub
Full document details: BS EN ISO 15118-5:2019

Table 10 — Selected PIXIT for test system configuration CF_05_001 (SUT equals SECC)

PIXIT	Description
PIXIT_SECC_CMN_CmValidate	Indication for explicit testing of SECC Validation process Choice: i) none_, ii) cmValidate
PIXIT_SECC_AC_InitialDutyCyle	Indication for starting with initial duty cycle of 5 % or 100 %
PIXIT_SECC_CMN_ArchitectureValidationNotRequired	Indication for SECC grid architecture which not requires a validation process
PIXIT_SECC_AC_ConnectionLossHandling	Indication for the implemented handling after connection loss (Option A: EVSE shall leave the logical network and shall switch to state E/F after connection loss, Option B: EVSE shall leave the logical network, shall stay in X2 state and waits for a new matching process)

Table 11 — Selected PIXIT for test system configuration CF_05_002 (SUT equals EVCC)

PIXIT	Description
PIXIT_EVCC_CMN_CmValidate	Indication for explicit testing of EVCC Validation process. If PIXIT_EVCC_CMN_CmValidate := cmValidate, test system sends a manipulated attenuation profile (attenuation was increased) to trigger a validation process Choice: i) cmValidate, ii) unknown, iii) none_
PIXIT_EVCC_CMN_FallbackValidationFailed	Indication for validation fallback handling if the SUT does not have implemented the validation process feature (failed) Choice: i) continue_, ii) skip, iii) terminate iv) unknown
PIXIT_EVCC_CMN_FallbackValidationNotRequired	Indication for validation fallback if the SECC grid architecture not requires a validation process (notRequired) Choice: i) continue_, ii) skip, iii) unknown
PIXIT_EVCC_CMN_ConcurrentValidation	Indication for handling if an SECC is occupied by another running validation process Choice: i) retry, ii) iterate, iii) unknown
PIXIT_EVCC_CMN_TTMatchingRepetitionConfig	Indication for the knowledge of the configuration parameter PIXIT_EVCC_CMN_TTMatchingRepetition and PIXIT_EVCC_CMN_TTMatchingRate
PIXIT_EVCC_CMN_TTMatchingRepetition	Predefined SUT value for the parameter TT_matching_repetition
PIXIT_EVCC_CMN_TTMatchingRate	Predefined SUT value for the parameter TT_matching_rate
PIXIT_EVCC_CMN_ValidationRetry	Predefined SUT value for time to wait for a retry of the validation process if a SECC is occupied by another running validation process
PIXIT_EVCC_CMN_Pause	Indication for enabling a charging pause Choice: i) pause, ii) unknown, iii) none_
PIXIT_EVCC_AC_ConnectionLossHandling	Indication for the implemented handling after connection loss (Option A: EV shall leave the logical network and shall wait for a new incoming matching trigger (control pilot X1 or X2 state), Option B: EV shall leave the logical network and shall restart the matching process after 'T_conn_resetup'.
PIXIT_EVCC_AC_TconnResetup	Predefined SUT value for the parameter T_conn_resetup

© ISO 2018 – All rights reserved

Full document details: BS EN ISO 15118-5:2019

7.3.5 Test control

The control part calls the test cases with actual parameters and controls their execution. Program statements PICS/PIXIT are used to specify the selection and execution order of the test cases (see Annex B). For each use case all valid PICS/PIXIT configurations are summarized in Table 12 - Table 15.

Table 12 — SECC AC PICS/PIXIT configuration

Configuration	EIM	PnC
1	PIXIT_SECC_AC_InitialDutyCyle := dc5 **and** PICS_CMN_CMN_IdentificationMode := eIM **and** PICS_SECC_CMN_EIMDone := afterPlugin **and** PICS_CMN_CMN_ChargingMode := aC	PIXIT_SECC_CMN_CmValidate == cmValidate := cmValidate **and** PICS_CMN_CMN_ChargingMode := aC
2	PIXIT_SECC_AC_InitialDutyCyle := dc100 **and** PICS_CMN_CMN_IdentificationMode := eIM **and** PICS_SECC_CMN_EIMDone := afterPlugin **and** PICS_CMN_CMN_ChargingMode := aC	PIXIT_SECC_CMN_CmValidate := cmValidate **and** PIXIT_SECC_CMN_ArchitectureValidationNotRequired := true **and** PICS_CMN_CMN_ChargingMode := aC
3	PICS_CMN_CMN_IdentificationMode := eIM **and** PICS_SECC_CMN_EIMDone := beforePlugin **and** PICS_CMN_CMN_ChargingMode := aC	PIXIT_SECC_CMN_CmValidate := none_ **and** PICS_CMN_CMN_ChargingMode := aC
4	PIXIT_SECC_CMN_CmValidate == cmValidate := cmValidate **and** PICS_CMN_CMN_ChargingMode := aC	PIXIT_CMN_CMN_CmAmpMap := false **and** PICS_CMN_CMN_ChargingMode := aC
5	PIXIT_SECC_CMN_CmValidate := cmValidate **and** PIXIT_SECC_CMN_ArchitectureValidationNotRequired := true **and** PICS_CMN_CMN_ChargingMode := aC	PICS_SECC_CMN_Pause := true **and** PICS_CMN_CMN_CombinedTesting := true **and** PIXIT_CMN_CMN_WakeUp > PICS_CMN_CMN_WakeUp **and** PICS_CMN_CMN_ChargingMode := aC
6	PIXIT_SECC_CMN_CmValidate := none_ **and** PICS_CMN_CMN_ChargingMode := aC	PICS_SECC_CMN_Pause := true **and** PICS_CMN_CMN_CombinedTesting := true **and** PIXIT_CMN_CMN_WakeUp < PICS_CMN_CMN_WakeUp **and** PICS_CMN_CMN_ChargingMode := aC
7	PIXIT_CMN_CMN_CmAmpMap := false **and** PICS_CMN_CMN_ChargingMode := aC	PICS_SECC_CMN_Pause := false **and** PICS_CMN_CMN_CombinedTesting := true **and** PICS_CMN_CMN_ChargingMode := aC
8	PIXIT_SECC_AC_InitialDutyCyle := dc5 **and** PICS_CMN_CMN_IdentificationMode := eIM **and** PICS_SECC_CMN_EIMDone := duringSlac **and** PICS_CMN_CMN_ChargingMode := aC	PICS_SECC_CMN_Pause := true **and** PICS_CMN_CMN_CombinedTesting := true **and** PICS_CMN_CMN_WakeUp < par_SECC_T_step_X1 **and** PIXIT_CMN_CMN_WakeUp > PICS_CMN_CMN_WakeUp **and** PICS_CMN_CMN_ChargingMode := aC
9	PICS_SECC_CMN_Pause := true **and** PICS_CMN_CMN_CombinedTesting := true **and** PIXIT_CMN_CMN_WakeUp > PICS_CMN_CMN_WakeUp **and** PICS_CMN_CMN_ChargingMode := aC	PICS_CMN_CMN_InitiateCmAmpMap := true **and** PIXIT_CMN_CMN_CmAmpMap := true **and** PICS_CMN_CMN_ChargingMode := aC
10	PICS_SECC_CMN_Pause := true **and** PICS_CMN_CMN_CombinedTesting := true **and** PIXIT_CMN_CMN_WakeUp < PICS_CMN_CMN_WakeUp **and** PICS_CMN_CMN_ChargingMode := aC	PICS_CMN_CMN_InitiateCmAmpMap := false **and** PIXIT_CMN_CMN_CmAmpMap := true **and** PICS_CMN_CMN_ChargingMode := aC
11	PICS_SECC_CMN_Pause := false **and** PICS_CMN_CMN_CombinedTesting := true **and** PICS_CMN_CMN_ChargingMode := aC	PIXIT_SECC_AC_InitialDutyCyle := dc5 **and** PICS_CMN_CMN_ChargingMode := aC
12	PIXIT_SECC_AC_InitialDutyCyle := dc100 **and** PICS_CMN_CMN_IdentificationMode := eIM **and**	PIXIT_SECC_AC_InitialDutyCyle := dc100 **and** PICS_CMN_CMN_ChargingMode := aC

AVA Documents
Document Sharing Hub

© ISO 2018 – All rights reserved

Full document details: BS EN ISO 15118-5:2019

Configuration	EIM	PnC
	PICS_SECC_CMN_EIMDone := duringSlac **and** PICS_CMN_CMN_ChargingMode := aC	
13	PICS_SECC_CMN_Pause := true **and** PICS_CMN_CMN_CombinedTesting := true **and** PICS_CMN_CMN_WakeUp < par_SECC_T_step_X1 **and** PIXIT_CMN_CMN_WakeUp > PICS_CMN_CMN_WakeUp **and** PICS_CMN_CMN_ChargingMode := aC	PICS_CMN_CMN_ChargingMode := aC
14	PICS_CMN_CMN_InitiateCmAmpMap := true **and** PIXIT_CMN_CMN_CmAmpMap := true **and** PICS_CMN_CMN_ChargingMode := aC	
15	PICS_CMN_CMN_InitiateCmAmpMap := false **and** PIXIT_CMN_CMN_CmAmpMap := true **and** PICS_CMN_CMN_ChargingMode := aC	
16	PIXIT_SECC_AC_InitialDutyCyle := dc5 **and** PICS_CMN_CMN_IdentificationMode := eIM **and** PICS_CMN_CMN_ChargingMode := aC	
17	PIXIT_SECC_AC_InitialDutyCyle := dc5 **and** PICS_CMN_CMN_ChargingMode := aC	
18	PIXIT_SECC_AC_InitialDutyCyle := dc5 **and** PIXIT_SECC_AC_ConnectionLossHandling := optionA **and** PICS_SECC_CMN_EIMDone := afterPlugin **and** PICS_CMN_CMN_IdentificationMode := eIM **and** PICS_CMN_CMN_ChargingMode := aC	
19	PIXIT_SECC_AC_InitialDutyCyle := dc5 **and** PIXIT_SECC_AC_ConnectionLossHandling := optionB **and** PICS_SECC_CMN_EIMDone := afterPlugin **and** PICS_CMN_CMN_IdentificationMode := eIM **and** PICS_CMN_CMN_ChargingMode := aC	
20	PIXIT_SECC_AC_InitialDutyCyle := dc100 **and** PICS_CMN_CMN_ChargingMode := aC	
21	PICS_CMN_CMN_ChargingMode := aC	

Table 13 — SECC DC PICS/PIXIT configuration

Configuration	EIM	PnC
1	PIXIT_SECC_CMN_CmValidate := cmValidate **and** PICS_CMN_CMN_ChargingMode := dC	PIXIT_SECC_CMN_CmValidate := cmValidate **and** PICS_CMN_CMN_ChargingMode := dC
2	PIXIT_SECC_CMN_CmValidate := cmValidate **and** PIXIT_SECC_CMN_ArchitectureValidationNotRequired := true **and** PICS_CMN_CMN_ChargingMode := dC	PIXIT_SECC_CMN_CmValidate := cmValidate **and** PIXIT_SECC_CMN_ArchitectureValidationNotRequired := true **and** PICS_CMN_CMN_ChargingMode := dC
3	PIXIT_SECC_CMN_CmValidate := none_ **and** PICS_CMN_CMN_ChargingMode := dC	PIXIT_SECC_CMN_CmValidate := none_ **and** PICS_CMN_CMN_ChargingMode := dC
4	PIXIT_CMN_CMN_CmAmpMap := false **and** PICS_CMN_CMN_ChargingMode := dC	PIXIT_CMN_CMN_CmAmpMap := false **and** PICS_CMN_CMN_ChargingMode := dC
5	PICS_SECC_CMN_Pause := true **and** PICS_CMN_CMN_CombinedTesting := true **and** PIXIT_CMN_CMN_WakeUp > PICS_CMN_CMN_WakeUp **and** PICS_CMN_CMN_ChargingMode := dC	PICS_SECC_CMN_Pause := true **and** PICS_CMN_CMN_CombinedTesting := true **and** PIXIT_CMN_CMN_WakeUp > PICS_CMN_CMN_WakeUp **and** PICS_CMN_CMN_ChargingMode := dC
6	PICS_SECC_CMN_Pause := true **and** PICS_CMN_CMN_CombinedTesting := true **and**	PICS_SECC_CMN_Pause := true **and** PICS_CMN_CMN_CombinedTesting := true **and**

© ISO 2018 – All rights reserved

Documents
Document Sharing Hub
Full document details: BS EN ISO 15118-5:2019

Configuration	EIM	PnC
	PIXIT_CMN_CMN_WakeUp < PICS_CMN_CMN_WakeUp **and** PICS_CMN_CMN_ChargingMode := dC	PIXIT_CMN_CMN_WakeUp < PICS_CMN_CMN_WakeUp **and** PICS_CMN_CMN_ChargingMode := dC
6	PICS_SECC_CMN_Pause := false **and** PICS_CMN_CMN_CombinedTesting := true **and** PICS_CMN_CMN_ChargingMode := dC	PICS_SECC_CMN_Pause := false **and** PICS_CMN_CMN_CombinedTesting := true **and** PICS_CMN_CMN_ChargingMode := dC
7	PICS_SECC_CMN_Pause := true **and** PICS_CMN_CMN_CombinedTesting := true **and** PICS_CMN_CMN_WakeUp < par_SECC_T_step_X1 **and** PIXIT_CMN_CMN_WakeUp > PICS_CMN_CMN_WakeUp **and** PICS_CMN_CMN_ChargingMode := dC	PICS_SECC_CMN_Pause := true **and** PICS_CMN_CMN_CombinedTesting := true **and** PICS_CMN_CMN_WakeUp < par_SECC_T_step_X1 **and** PIXIT_CMN_CMN_WakeUp > PICS_CMN_CMN_WakeUp **and** PICS_CMN_CMN_ChargingMode := dC
8	PICS_CMN_CMN_InitiateCmAmpMap := true **and** PIXIT_CMN_CMN_CmAmpMap := true **and** PICS_CMN_CMN_ChargingMode := dC	PICS_CMN_CMN_InitiateCmAmpMap := true **and** PIXIT_CMN_CMN_CmAmpMap := true **and** PICS_CMN_CMN_ChargingMode := dC
9	PICS_CMN_CMN_InitiateCmAmpMap := false **and** PIXIT_CMN_CMN_CmAmpMap := true **and** PICS_CMN_CMN_ChargingMode := dC	PICS_CMN_CMN_InitiateCmAmpMap := false **and** PIXIT_CMN_CMN_CmAmpMap := true **and** PICS_CMN_CMN_ChargingMode := dC
10	PICS_CMN_CMN_ChargingMode := dC	PICS_CMN_CMN_ChargingMode := dC

Table 14 — EVCC AC PICS/PIXIT configuration

Configuration	EIM	PnC
1	PIXIT_EVCC_CMN_CmValidate := cmValidate **and** PICS_CMN_CMN_ChargingMode := aC	PIXIT_EVCC_CMN_CmValidate := cmValidate **and** PICS_CMN_CMN_ChargingMode := aC
2	PIXIT_EVCC_CMN_CmValidate := none_ **and** PICS_CMN_CMN_ChargingMode := aC	PIXIT_EVCC_CMN_CmValidate := none_ **and** PICS_CMN_CMN_ChargingMode := aC
3	PIXIT_EVCC_CMN_CmValidate := cmValidate **and** PIXIT_EVCC_CMN_FallbackValidationFailed := skip **and** PICS_CMN_CMN_ChargingMode := aC	PIXIT_EVCC_CMN_CmValidate := cmValidate **and** PIXIT_EVCC_CMN_FallbackValidationFailed := skip **and** PICS_CMN_CMN_ChargingMode := aC
4	PIXIT_EVCC_CMN_CmValidate := cmValidate **and** PIXIT_EVCC_CMN_FallbackValidationNotRequired := continue_ **and** PICS_CMN_CMN_ChargingMode := aC	PIXIT_EVCC_CMN_CmValidate := cmValidate **and** PIXIT_EVCC_CMN_FallbackValidationNotRequired := continue_ **and** PICS_CMN_CMN_ChargingMode := aC
5	PIXIT_EVCC_CMN_CmValidate := cmValidate **and** PIXIT_EVCC_CMN_FallbackValidationNotRequired := skip **and** PICS_CMN_CMN_ChargingMode := aC	PIXIT_EVCC_CMN_CmValidate := cmValidate **and** PIXIT_EVCC_CMN_FallbackValidationNotRequired := skip **and** PICS_CMN_CMN_ChargingMode := aC
6	PIXIT_EVCC_CMN_CmValidate := cmValidate **and** PIXIT_EVCC_CMN_ConcurrentValidation := retry **and** PICS_CMN_CMN_ChargingMode := aC	PIXIT_EVCC_CMN_CmValidate := cmValidate **and** PIXIT_EVCC_CMN_ConcurrentValidation := retry **and** PICS_CMN_CMN_ChargingMode := aC
7	PIXIT_EVCC_CMN_Pause := pause **and** PICS_CMN_CMN_CombinedTesting := true **and** PIXIT_CMN_CMN_WakeUp > PICS_CMN_CMN_WakeUp **and** PICS_CMN_CMN_ChargingMode := aC	PIXIT_EVCC_CMN_Pause := pause **and** PICS_CMN_CMN_CombinedTesting := true **and** PIXIT_CMN_CMN_WakeUp > PICS_CMN_CMN_WakeUp **and** PICS_CMN_CMN_ChargingMode := aC
8	PIXIT_EVCC_CMN_Pause := pause **and** PICS_CMN_CMN_CombinedTesting := true **and** PIXIT_CMN_CMN_WakeUp < PICS_CMN_CMN_WakeUp **and** PICS_CMN_CMN_ChargingMode := aC	PIXIT_EVCC_CMN_Pause := pause **and** PICS_CMN_CMN_CombinedTesting := true **and** PIXIT_CMN_CMN_WakeUp < PICS_CMN_CMN_WakeUp **and** PICS_CMN_CMN_ChargingMode := aC
9	PIXIT_EVCC_CMN_Pause := none_ **and**	PIXIT_EVCC_CMN_Pause := none_ **and**

© ISO 2018 – All rights reserved

AVA Documents Document Sharing Hub

Full document details: BS EN ISO 15118-5:2019

Configuration	EIM	PnC
	PICS_CMN_CMN_CombinedTesting := true **and** PICS_CMN_CMN_ChargingMode := aC	PICS_CMN_CMN_CombinedTesting := true **and** PICS_CMN_CMN_ChargingMode := aC
10	PICS_EVCC_CMN_PmaxSchedulewithZeroPow := sleepWithoutCharge **and** PICS_CMN_CMN_CombinedTesting := true **and** par_V2G_SECC_Pmax0W < PICS_CMN_CMN_WakeUp **and** PICS_CMN_CMN_ChargingMode := aC	PICS_EVCC_CMN_PmaxSchedulewithZeroPow := sleepWithoutCharge **and** PICS_CMN_CMN_CombinedTesting := true **and** par_V2G_SECC_Pmax0W < PICS_CMN_CMN_WakeUp **and** PICS_CMN_CMN_ChargingMode := aC
11	PICS_EVCC_CMN_PmaxSchedulewithZeroPow := sleepAfterCharge **and** PICS_CMN_CMN_CombinedTesting := true **and** par_V2G_SECC_Pmax0W < PICS_CMN_CMN_WakeUp **and** PICS_CMN_CMN_ChargingMode := aC	PICS_EVCC_CMN_PmaxSchedulewithZeroPow := sleepAfterCharge **and** PICS_CMN_CMN_CombinedTesting := true **and** par_V2G_SECC_Pmax0W < PICS_CMN_CMN_WakeUp **and** PICS_CMN_CMN_ChargingMode := aC
12	PIXIT_CMN_CMN_CmAmpMap := false **and** PICS_CMN_CMN_ChargingMode := aC	PIXIT_CMN_CMN_CmAmpMap := false **and** PICS_CMN_CMN_ChargingMode := aC
13	PICS_CMN_CMN_InitiateCmAmpMap := true **and** PIXIT_CMN_CMN_CmAmpMap := true **and** PICS_CMN_CMN_ChargingMode := aC	PICS_CMN_CMN_InitiateCmAmpMap := true **and** PIXIT_CMN_CMN_CmAmpMap := true **and** PICS_CMN_CMN_ChargingMode := aC
14	PICS_CMN_CMN_InitiateCmAmpMap := false **and** PIXIT_CMN_CMN_CmAmpMap := true **and** PICS_CMN_CMN_ChargingMode := aC	PICS_CMN_CMN_InitiateCmAmpMap := false **and** PIXIT_CMN_CMN_CmAmpMap := true **and** PICS_CMN_CMN_ChargingMode := aC
15	PIXIT_EVCC_CMN_TTMatchingRepetitionConfig := true **and** PIXIT_EVCC_CMN_TTMatchingRepetition **and** PIXIT_EVCC_CMN_TTMatchingRate **and** PICS_CMN_CMN_ChargingMode := aC	PIXIT_EVCC_CMN_TTMatchingRepetitionConfig := true **and** PIXIT_EVCC_CMN_TTMatchingRepetition **and** PIXIT_EVCC_CMN_TTMatchingRate **and** PICS_CMN_CMN_ChargingMode := aC
16	PIXIT_EVCC_CMN_CmValidate := cmValidate **and** PIXIT_EVCC_CMN_FallbackValidationFailed := continue_ **and** PICS_CMN_CMN_ChargingMode := aC	PIXIT_EVCC_CMN_CmValidate := cmValidate **and** PIXIT_EVCC_CMN_FallbackValidationFailed := continue_ **and** PICS_CMN_CMN_ChargingMode := aC
17	PIXIT_EVCC_CMN_CmValidate := cmValidate **and** PIXIT_EVCC_CMN_FallbackValidationFailed := terminate **and** PICS_CMN_CMN_ChargingMode := aC	PIXIT_EVCC_CMN_CmValidate := cmValidate **and** PIXIT_EVCC_CMN_FallbackValidationFailed := terminate **and** PICS_CMN_CMN_ChargingMode := aC
18	PIXIT_EVCC_CMN_CmValidate := cmValidate **and** PIXIT_EVCC_CMN_ConcurrentValidation := iterate **and** PICS_CMN_CMN_ChargingMode := aC	PIXIT_EVCC_CMN_CmValidate := cmValidate **and** PIXIT_EVCC_CMN_ConcurrentValidation := iterate **and** PICS_CMN_CMN_ChargingMode := aC
19	PIXIT_EVCC_AC_ConnectionLossHandling == optionA **and** PICS_CMN_CMN_ChargingMode := aC	PIXIT_EVCC_AC_ConnectionLossHandling == optionA **and** PICS_CMN_CMN_ChargingMode := aC
20	PIXIT_EVCC_AC_ConnectionLossHandling == optionB **and** PIXIT_EVCC_AC_TconnResetup **and** PICS_CMN_CMN_ChargingMode := aC	PIXIT_EVCC_AC_ConnectionLossHandling == optionB **and** PIXIT_EVCC_AC_TconnResetup **and** PICS_CMN_CMN_ChargingMode := aC
21	PICS_CMN_CMN_IdentificationMode := eIM **and** PICS_CMN_CMN_ChargingMode := aC	PICS_CMN_CMN_ChargingMode := aC
22	PICS_CMN_CMN_ChargingMode := aC	

Table 15 — EVCC DC PICS/PIXIT configuration

Configuration	EIM	PnC
1	PIXIT_EVCC_CMN_CmValidate := cmValidate **and** PICS_CMN_CMN_ChargingMode := dC	PIXIT_EVCC_CMN_CmValidate := cmValidate **and** PICS_CMN_CMN_ChargingMode := dC
2	PIXIT_EVCC_CMN_CmValidate := none_ **and**	PIXIT_EVCC_CMN_CmValidate := none_ **and**

© ISO 2018 – All rights reserved

Full document details: BS EN ISO 15118-5:2019

Configuration	EIM	PnC
	PICS_CMN_CMN_ChargingMode := dC	PICS_CMN_CMN_ChargingMode := dC
3	PIXIT_EVCC_CMN_CmValidate := cmValidate **and** PIXIT_EVCC_CMN_FallbackValidationFailed := skip **and** PICS_CMN_CMN_ChargingMode := dC	PIXIT_EVCC_CMN_CmValidate := cmValidate **and** PIXIT_EVCC_CMN_FallbackValidationFailed := skip **and** PICS_CMN_CMN_ChargingMode := dC
4	PIXIT_EVCC_CMN_CmValidate := cmValidate **and** PIXIT_EVCC_CMN_FallbackValidationNotRequired := continue_ **and** PICS_CMN_CMN_ChargingMode := dC	PIXIT_EVCC_CMN_CmValidate := cmValidate **and** PIXIT_EVCC_CMN_FallbackValidationNotRequired := continue_ **and** PICS_CMN_CMN_ChargingMode := dC
5	PIXIT_EVCC_CMN_CmValidate := cmValidate **and** PIXIT_EVCC_CMN_FallbackValidationNotRequired := skip **and** PICS_CMN_CMN_ChargingMode := dC	PIXIT_EVCC_CMN_CmValidate := cmValidate **and** PIXIT_EVCC_CMN_FallbackValidationNotRequired := skip **and** PICS_CMN_CMN_ChargingMode := dC
6	PIXIT_EVCC_CMN_CmValidate := cmValidate **and** PIXIT_EVCC_CMN_ConcurrentValidation := retry **and** PICS_CMN_CMN_ChargingMode := dC	PIXIT_EVCC_CMN_CmValidate := cmValidate **and** PIXIT_EVCC_CMN_ConcurrentValidation := retry **and** PICS_CMN_CMN_ChargingMode := dC
7	PIXIT_EVCC_CMN_Pause := pause **and** PICS_CMN_CMN_CombinedTesting := true **and** PIXIT_CMN_CMN_WakeUp > PICS_CMN_CMN_WakeUp **and** PICS_CMN_CMN_ChargingMode := dC	PIXIT_EVCC_CMN_Pause := pause **and** PICS_CMN_CMN_CombinedTesting := true **and** PIXIT_CMN_CMN_WakeUp > PICS_CMN_CMN_WakeUp **and** PICS_CMN_CMN_ChargingMode := dC
8	PIXIT_EVCC_CMN_Pause := pause **and** PICS_CMN_CMN_CombinedTesting := true **and** PIXIT_CMN_CMN_WakeUp < PICS_CMN_CMN_WakeUp **and** PICS_CMN_CMN_ChargingMode := dC	PIXIT_EVCC_CMN_Pause := pause **and** PICS_CMN_CMN_CombinedTesting := true **and** PIXIT_CMN_CMN_WakeUp < PICS_CMN_CMN_WakeUp **and** PICS_CMN_CMN_ChargingMode := dC
9	PIXIT_EVCC_CMN_Pause := none_ **and** PICS_CMN_CMN_CombinedTesting := true **and** PICS_CMN_CMN_ChargingMode := dC	PIXIT_EVCC_CMN_Pause := none_ **and** PICS_CMN_CMN_CombinedTesting := true **and** PICS_CMN_CMN_ChargingMode := dC
10	PICS_EVCC_CMN_PmaxSchedulewithZeroPow := sleepWithoutCharge **and** PICS_CMN_CMN_CombinedTesting := true **and** par_V2G_SECC_Pmax0W < PICS_CMN_CMN_WakeUp **and** PICS_CMN_CMN_ChargingMode := dC	PICS_EVCC_CMN_PmaxSchedulewithZeroPow := sleepWithoutCharge **and** PICS_CMN_CMN_CombinedTesting := true **and** par_V2G_SECC_Pmax0W < PICS_CMN_CMN_WakeUp **and** PICS_CMN_CMN_ChargingMode := dC
11	PICS_EVCC_CMN_PmaxSchedulewithZeroPow := sleepAfterCharge **and** PICS_CMN_CMN_CombinedTesting := true **and** par_V2G_SECC_Pmax0W < PICS_CMN_CMN_WakeUp **and** PICS_CMN_CMN_ChargingMode := dC	PICS_EVCC_CMN_PmaxSchedulewithZeroPow := sleepAfterCharge **and** PICS_CMN_CMN_CombinedTesting := true **and** par_V2G_SECC_Pmax0W < PICS_CMN_CMN_WakeUp **and** PICS_CMN_CMN_ChargingMode := dC
12	PIXIT_CMN_CMN_CmAmpMap := false **and** PICS_CMN_CMN_ChargingMode := dC	PIXIT_CMN_CMN_CmAmpMap := false **and** PICS_CMN_CMN_ChargingMode := dC
13	PICS_CMN_CMN_InitiateCmAmpMap := true **and** PIXIT_CMN_CMN_CmAmpMap := true **and** PICS_CMN_CMN_ChargingMode := dC	PICS_CMN_CMN_InitiateCmAmpMap := true **and** PIXIT_CMN_CMN_CmAmpMap := true **and** PICS_CMN_CMN_ChargingMode := dC
14	PICS_CMN_CMN_InitiateCmAmpMap := false **and** PIXIT_CMN_CMN_CmAmpMap := true **and** PICS_CMN_CMN_ChargingMode := dC	PICS_CMN_CMN_InitiateCmAmpMap := false **and** PIXIT_CMN_CMN_CmAmpMap := true **and** PICS_CMN_CMN_ChargingMode := dC
15	PIXIT_EVCC_CMN_TTMatchingRepetitionConfig := true **and** PIXIT_EVCC_CMN_TTMatchingRepetition **and** PIXIT_EVCC_CMN_TTMatchingRate **and** PICS_CMN_CMN_ChargingMode := dC	PIXIT_EVCC_CMN_TTMatchingRepetitionConfig := true **and** PIXIT_EVCC_CMN_TTMatchingRepetition **and** PIXIT_EVCC_CMN_TTMatchingRate **and** PICS_CMN_CMN_ChargingMode := dC
16	PIXIT_EVCC_CMN_CmValidate := cmValidate **and**	PIXIT_EVCC_CMN_CmValidate := cmValidate **and**

© ISO 2018 – All rights reserved

AVA Documents Document Sharing Hub

Full document details: BS EN ISO 15118-5:2019

Configuration	EIM	PnC
	PIXIT_EVCC_CMN_FallbackValidationFailed := continue_ **and** PICS_CMN_CMN_ChargingMode := dC	PIXIT_EVCC_CMN_FallbackValidationFailed := continue_ **and** PICS_CMN_CMN_ChargingMode := dC
17	PIXIT_EVCC_CMN_CmValidate := cmValidate **and** PIXIT_EVCC_CMN_FallbackValidationFailed := terminate **and** PICS_CMN_CMN_ChargingMode := dC	PIXIT_EVCC_CMN_CmValidate := cmValidate **and** PIXIT_EVCC_CMN_FallbackValidationFailed := terminate **and** PICS_CMN_CMN_ChargingMode := dC
18	PIXIT_EVCC_CMN_CmValidate := cmValidate **and** PIXIT_EVCC_CMN_ConcurrentValidation := iterate **and** PICS_CMN_CMN_ChargingMode := dC	PIXIT_EVCC_CMN_CmValidate := cmValidate **and** PIXIT_EVCC_CMN_ConcurrentValidation := iterate **and** PICS_CMN_CMN_ChargingMode := dC
19	PICS_CMN_CMN_ChargingMode := dC	PICS_CMN_CMN_ChargingMode := dC

7.4 Test suite identifiers

The selection of common naming conventions is one simple and often used mechanism to implement test suites which are consistent, maintainable and understandable for multiple users. Therefore, based on common ETSI naming conventions more specific naming conventions for the ISO 15118 conformance test suite are defined.

7.4.1 Module identifiers

All modules defined in the TSS start with a capital letter. The ISO 15118 test suite specific module identifier for template, function or test case modules is defined as:

<modtype>_<sut>_<ctx>

The segments of this identifier are defined in Table 16. An example for test case module identifier is:

TestCases_SECC_CmSlacParm

Table 16 — ISO 15118 test suite naming convention for modules

Identifier	Values	Description
<modtype>		Module type
	TestCases	Module including test cases
	Functions	Module including functions
	Templates	Module including templates
<sut>		System under test
	EVCC	Electric Vehicle Communication Controller
	SECC	Supply Equipment Communication Controller
	CMN	Common (exclusively for template modules)
<ctx>	{fullname}	Context (e.g. name of message pattern signal name according to standard)

NOTE 1 For module types other than templates, functions or test cases there is no identifier format defined.

7.4.2 Test case identifiers

The naming conventions for test cases are using a prefix, which is defined by ETSI as shown in Table 17.

Table 17 — ETSI naming convention for test case names

Keyword	Definition	Example
testcase	Every testcase begins with TC (TC_)	TC_CmSlacParm

© ISO 2018 – All rights reserved

Documents
Document Sharing Hub
Full document details: BS EN ISO 15118-5:2019

name	TC_TestCaseName	

© ISO 2018 – All rights reserved

Documents
Document Sharing Hub
Full document details: BS EN ISO 15118-5:2019

The ISO 15118 test suite specific test case identifier is defined as:

TC_<sut>_<dom>_<ttyp>_<ctx>_<nn>

The segments of this identifier are described in Table 18. An example for test case identifier is:

TC_SECC_CMN_VTB_CmSlacParm_001

Table 18 — ISO 15118 test suite naming convention for test case identifiers

Identifier	Values	Description
<prefix>	TC	see Table 17
<sut>		System under test
	EVCC	Electric Vehicle Communication Controller
	SECC	Supply Equipment Communication Controller
<dom>		Domain
	AC	AC specific behaviors
	DC	DC specific behaviors
	CMN	Common
<ttyp>		Type of testing
	VTB	Valid test behavior
	ITB	Invalid test behavior
<ctx>	{fullname}	Context (e.g. name of message pattern signal name according to standard)
<nn>	{xxx}	Sequential number from 001 to 999

7.4.3 Template identifiers

The naming conventions for templates are using a prefix, which is defined by ETSI as shown in Table 19.

Table 19 — ETSI naming convention for templates

Keyword	Context	Definition	Example
template name	Templates with concrete attribute values	Every template begins with keyword m (m_)	m_DNSRequest
template name	Templates with wildcards or matching expression	If a template contains or refers to templates with wildcards {*|?} then template name begins with keyword mw (mw_)	mw_DNSResponse
template name	Templates with parameters, which do not assign or refer to templates with wildcards or matching expression	If a template contains attributes which are defined by parameters or constant values, then template name begins with keyword md (md_)	md_DNSResponse (integer ip)
template name	Templates with parameters, which do assign or refer to templates with wildcards or matching expression	If a template contains attributes which are defined by parameters, constant values or wildcards, then template name begins with keyword mdw (mdw_)	mdw_DNSResponse (integer ip)

© ISO 2018 – All rights reserved

Full document details: BS EN ISO 15118-5:2019

The ISO 15118 test suite specific template identifier is defined as:

<prefix>_<sut>_<dom>_<dtyp>_<nn>

The segments of this identifier are described in Table 20. An example for template identifier is:

md_EVCC_CMN_CmSlacParm_001

Table 20 — ISO 15118 test suite naming convention for template identifiers

Identifier	Values	Description
<prefix>		Type of template (see Table 19)
<sut>		System under test
	EVCC	Electric Vehicle Communication Controller
	SECC	Supply Equipment Communication Controller
	CMN	Common
<dom>		Domain
	AC	AC specific behaviors
	DC	DC specific behaviors
	CMN	Common
<dtyp>	{fullname}	Label of (root) data type according to standard
<nn>	{xxx}	Sequential number from 001 to 999

7.4.4 Function identifiers

The naming conventions for functions are using a prefix, which is defined by ETSI as shown in Table 21.

Table 21 — ETSI naming convention for function names

Keyword	Context	Definition	Example
function name	All functions	Every function begins with f (f_)	f_functionName

The ISO 15118 test suite naming convention for test case functions is defined as:

<prefix>_<sut>_<dom>_<ttyp>_<ctx>_<nn>

The segments of this identifier are described in Table 22. An example for template identifier is:

f_EVCC_CMN_ VTB_CmSlacParm_001

Table 22 — ISO 15118 test suite naming convention for function names

Identifier	Values	Description
<prefix>		f_ (see Table 21)
<sut>		System under test
	EVCC	Electric Vehicle Communication Controller
	SECC	Supply Equipment Communication Controller
<dom>		Domain
	AC	AC specific behaviors
	DC	DC specific behaviors
	CMN	Common
<ttyp>		Type of testing

© ISO 2018 – All rights reserved

Documents
Document Sharing Hub

Full document details: BS EN ISO 15118-5:2019

Identifier	Values	Description
	VTB	Valid test behavior
	ITB	Invalid test behavior
<ctx>	{fullname}	Context (e.g. name of message pattern signal name according to standard)
<nn>	{xxx}	Sequential number from 001 to 999

7.4.5 Timer identifiers

The naming conventions for timers are using a prefix, which is defined by ETSI as shown in Table 23.

Table 23 — ETSI naming convention for timers

Keyword	Context	Definition	Example
timer name	t_	Local timer	t_wait
timer name	tc_	Timer defined within a component	tc_authMin

The ISO 15118 test suite specific timer identifier is defined as:

<prefix>_<ctx>

The segments of this identifier are described in Table 24. An example for timer identifier is:

tc_V2G_EVCC_Msg_Timer

Table 24 — ISO 15118 test suite naming convention for timer identifiers

Identifier	Values	Description
<prefix>		Type of timer (see Table 23)
<ctx>	{fullname}	Context (e.g. name of timer according to ISO 15118-3 or if not part of the standard any given name describing the context of the timer)

7.4.6 PICS/PIXIT identifiers

The ISO 15118 test suite naming convention for PICS/PIXIT is defined as:

<pic>_<sut>_<dom>_<ctx>

The segments of this identifier are described in Table 25. An example for PICS/PIXIT identifier is:

PICS_SECC_CMN_CmValidate

Table 25 — ISO 15118 test suite naming convention for PICS/PIXIT identifiers

Identifier	Values	Description
<pic>		Protocol implementation capability
	PICS	Protocol Implementation Conformance Statement
	PIXIT	Protocol Implementation extra Information for Testing
<sut>		System under test
	EVCC	Electric Vehicle Communication Controller
	SECC	Supply Equipment Communication Controller
	CMN	Common
<dom>		Domain

© ISO 2018 – All rights reserved

Documents
Document Sharing Hub
Full document details: BS EN ISO 15118-5:2019

	AC	AC specific behaviors
	DC	DC specific behaviors
	CMN	Common
<ctx>	{fullname}	Context (e.g. name of message pattern signal name according to standard)

7.4.7 Verdict identifiers

In this sub clause the conventions for test verdicts are defined. The test verdicts defined in this document are listed in Table 26.

Table 26 — ISO 15118 test suite conventions on verdict handling

Verdict type	TTCN-3 Definition	ISO 15118 Test Suite
none	Is implicitly assigned in the beginning of every test case by default and is reported as a final verdict in the absence of any other verdict assignment during the test case execution.	No TSS specific definition (see TTCN-3 definition).
pass	Means that everything is OK. A verdict given when the observed outcome satisfies the test purpose and is valid with respect to the relevant requirements and with respect to the PICS. [ITU-T X.290]	If in review of a requirement the SUT has a correct behavior, then this verdict type shall be used.
inconc	A verdict given when the observed outcome is valid with respect to the relevant requirements but prevents the test purpose from being accomplished. [ITU-T X.290]	Means that neither pass nor fail can be reliably assigned.
fail	A verdict given when the observed outcome is syntactically invalid or inopportune with respect to the relevant requirements or the PICS/PIXIT. [ITU-T X.290]	If in review of a requirement the SUT has a wrong behavior, then this verdict type shall be used.

7.5 Test suite coverage

The following conditions apply in terms of test case coverage for this document regarding requirements defined in ISO 15118-3:

— Requirements that are out of scope according to the conventions defined in this document or cannot be tested in black-box tests are summarized in Table 27.

— Requirements that are not explicitly tested through a dedicated test case in the ATS but implicitly tested by the SUT Adapter/Codec are summarized in Table 28.

Table 27 — Requirements of ISO 15118-3 not considered in the ATS

List of requirement IDs	Comment (no consideration in ATS)
[V2G3-M09-05], [V2G3-M09-09], [V2G3-A06-02], [V2G3-A09-06], [V2G3-A09-20], [V2G3-A09-21], [V2G3-A09-22], [V2G3-A09-26], [V2G3-A09-27], [V2G3-A09-29], [V2G3-A09-48], [V2G3-A09-49], [V2G3-A09-69], [V2G3-A09-100], [V2G3-A09-102]	Cannot be tested explicitly in EVCC black box test configuration
[V2G3-M06-10], [V2G3-A06-03], [V2G3-A09-19], [V2G3-A09-88], [V2G3-A09-92], [V2G3-A09-103],	Cannot be tested explicitly in SECC black box test configuration

© ISO 2018 – All rights reserved

Documents
Document Sharing Hub

Full document details: BS EN ISO 15118-5:2019

List of requirement IDs	Comment (no consideration in ATS)
[V2G3-A09-104]	
[V2G3-M08-02], [V2G3-M09-18], [V2G3-A06-04], [V2G3-A09-119], [V2G3-A09-120]	Cannot be tested explicitly in SECC/EVCC black box test configuration
[V2G3-A11-08], [V2G3-A11-09], [V2G3-A11-10], [V2G3-A11-11], [V2G3-A11-12], [V2G3-A11-13], [V2G3-A11-14], [V2G3-A11-15]	Out of scope of the ATS (The requirements for calibrating the power level of the PLC signal are not considered in the ATS -> see sub clause 8.1)
[V2G3-M06-02], [V2G3-M06-03], [V2G3-M06-12], [V2G3-M06-14], [V2G3-A09-117]	Out of scope of this standard (Requirement refers to ISO 15118-2. Cannot be tested in the context of ISO 15118-3)
[V2G3-M06-01], [V2G3-A09-02], [V2G3-A09-93]	Out of scope of this standard (Requirement refers to external RFCs, standards, etc.)
[V2G3-M06-16], [V2G3-A06-01], [V2G3-A09-107], [V2G3-A10-01], [V2G3-A11-01], [V2G3-A11-02], [V2G3-A11-03], [V2G3-A11-04], [V2G3-A11-05], [V2G3-A11-06], [V2G3-A11-07]	Out of scope of this standard (Requirements may be validated with dedicated measurement equipment but are not considered in the ATS)
[V2G3-B09-01], [V2G3-B09-02], [V2G3-B09-03], [V2G3-B09-04], [V2G3-B11-01], [V2G3-B11-02], [V2G3-B11-03], [V2G3-B11-04], [V2G3-B11-05]	Out of scope of this standard (Requirements on IEEE 1901.2 G3-PLC are not covered in this standard)

Table 28 — Requirements of ISO 15118-3 implicitly covered by the SUT adapters / codecs

List of requirement IDs	Comment (implicitly tested)
[V2G3-A09-108]	Tested implicitly by ISO 15118-3 SUT adapter (refer to Part 5 reqs.)
[V2G3-A09-24], [V2G3-A09-55]	Tested implictly by ISO 15118-3 SUT adapter

The resulting test suite coverage in this document with reference to requirements in ISO 15118-3 is summarized in Table 29. It only includes requirements which are not listed for exclusion in Table 27 or Table 28. Table 29 defines the relevance of requirements of ISO 15118-3 for the ATS, based upon the type of SUT (EVCC or SECC), the authentication profile (EIM or PnC) and AC or DC charging. The following symbols are used in Table 29:

X Indicates requirements that are covered in the ATS with one or more test cases.

I Indicates requirements that are indirectly covered in the ATS but other than those listed in Table 29 can be directly associated to one or more test cases in the ATS.

P Indicates requirements that are only partially covered by one or more test cases in the ATS.

N Requirements that are not testable for the profile defined in the respective column.

- Requirements that are not applicable for the profile defined in the respective column.

O Requirements that are out of scope for the profile defined in the respective column.

Table 29 — ATS coverage of requirements in ISO 15118-3

Requirement ID	Covered in Test Suite								TC ID(s)/Comment
	SECC				EVCC				
	EIM		PnC		EIM		PnC		
	AC	DC	AC	DC	AC	DC	AC	DC	
[V2G3-M06-04]	X	O	O	O	—	—	—	—	Requirement is only testable if a corresponding PIXIT is considered for the profile defined in the respective column. Out of scope for the profile defined in the respective column (Requirement

© ISO 2018 – All rights reserved

Documents
Document Sharing Hub
Full document details: BS EN ISO 15118-5:2019

Requirement ID	Covered in Test Suite								TC ID(s)/Comment
	SECC				EVCC				
	EIM		PnC		EIM		PnC		
	AC	DC	AC	DC	AC	DC	AC	DC	
									refers to ISO 15118-2. Cannot be tested in the context of ISO 15118-3) TC_SECC_AC_VTB_CmSlacParm_001 TC_SECC_AC_VTB_CmSlacParm_002 TC_SECC_AC_VTB_CmSlacParm_003 TC_SECC_AC_VTB_CmSlacParm_004
[V2G3-M06-05]	X	—	—	—	—	—	—	—	Requirement is only testable if a corresponding PIXIT is considered TC_SECC_AC_VTB_CmSlacParm_001
[V2G3-M06-06]	X	—	—	—	—	—	—	—	Requirement is only testable if a corresponding PIXIT is considered TC_SECC_AC_VTB_PLCLinkStatus_001
[V2G3-M06-07]	X	—	—	—	—	—	—	—	Requirement is only testable if a corresponding PIXIT is considered TC_SECC_AC_VTB_CmSlacParm_002
[V2G3-M06-08]	X	—	—	—	—	—	—	—	Requirement is only testable if a corresponding PIXIT is considered TC_SECC_AC_VTB_CmSlacParm_001 TC_SECC_AC_VTB_CmSlacParm_003
[V2G3-M06-09]	I	—	—	—	—	—	—	—	Requirement is only testable if a corresponding PIXIT is considered. Tested indirectly by consideration of requirement [V2G3-M06-05] or [V2G3-M06-07] TC_SECC_AC_VTB_CmSlacParm_001 TC_SECC_AC_VTB_CmSlacParm_002 TC_SECC_AC_VTB_CmSlacParm_003
[V2G3-M06-11]	I	I	I	I	—	—	—	—	Tested indirectly by consideration of requirement [V2G3-A09-15] Group_[V2G3-M06-11]
[V2G3-M06-13]	—	—	—	—	I	I	I	I	Tested indirectly by consideration of requirement [V2G3-A09-05] Group_[V2G3-A09-05]_[V2G3-M06-13]
[V2G3-M06-15]	—	—	—	—	P	—	—	—	Requirement definition considers various possible scenarios, so the requirement can only be tested partially for exemplarily selected cases TC_EVCC_AC_VTB_AttenuationCharacterization_001 TC_EVCC_AC_VTB_AttenuationCharacterization_002
[V2G3-M07-01]	I	I	I	I	—	—	—	—	Tested indirectly by consideration of requirement [V2G3-A09-15] Group_[V2G3-M07-01]
[V2G3-M07-02]	I	I	I	I	—	—	—	—	Tested indirectly by consideration of requirement [V2G3-A09-15] TC_SECC_CMN_VTB_CmSlacParm_009
[V2G3-M07-03]	I	I	I	I	I	I	I	I	Tested indirectly by consideration of requirement [V2G3-M07-05] and [V2G3-M07-15]

© ISO 2018 – All rights reserved

AVA Documents Document Sharing Hub

Full document details: BS EN ISO 15118-5:2019

Requirement ID	Covered in Test Suite								TC ID(s)/Comment
	SECC				EVCC				
	EIM		PnC		EIM		PnC		
	AC	DC	AC	DC	AC	DC	AC	DC	
									Group_[V2G3-M07-03]
[V2G3-M07-04]	P	—	P	—	—	—	—	—	Requirement is only testable if a corresponding PIXIT is considered. Internal processing cannot be tested in SECC black box test configuration, so the requirement can only be tested partially TC_SECC_AC_VTB_PLCLinkStatus_011
[V2G3-M07-05]	P	P	P	P	—	—	—	—	Requirement is only testable if a corresponding PIXIT is considered. Internal processing cannot be tested in SECC black box test configuration, so the requirement can only be tested partially TC_SECC_AC_VTB_PLCLinkStatus_005 TC_SECC_AC_VTB_PLCLinkStatus_006 TC_SECC_DC_VTB_PLCLinkStatus_004
[V2G3-M07-06]	P	P	P	P	—	—	—	—	Requirement is only testable if a corresponding PIXIT is considered (AC). Internal states cannot be tested explicitly in SECC black box configuration, so the requirement can only be tested partially TC_SECC_AC_VTB_PLCLinkStatus_005 TC_SECC_AC_VTB_PLCLinkStatus_006 TC_SECC_DC_VTB_PLCLinkStatus_004
[V2G3-M07-07]	P	P	P	P	—	—	—	—	Requirement is only testable if a corresponding PIXIT is considered (AC). Internal states cannot be tested explicitly in SECC black box configuration, so the requirement can only be tested partially TC_SECC_AC_VTB_PLCLinkStatus_005 TC_SECC_AC_VTB_PLCLinkStatus_006 TC_SECC_DC_VTB_PLCLinkStatus_004
[V2G3-M07-08]	X	X	X	X	—	—	—	—	Requirement is only testable if a corresponding PIXIT is considered Group_[V2G3-M07-08]
[V2G3-M07-09]	P	P	P	P	—	—	—	—	Requirement is only testable if a corresponding PIXIT is considered. Internal processing cannot be tested in SECC black box test configuration, so the requirement can only be tested partially TC_SECC_AC_VTB_PLCLinkStatus_005 TC_SECC_AC_VTB_PLCLinkStatus_006 TC_SECC_AC_VTB_PLCLinkStatus_011 TC_SECC_DC_VTB_PLCLinkStatus_004
[V2G3-M07-10]	I	—	—	—	—	—	—	—	Tested indirectly by consideration of requirement [V2G3-M07-11] and [V2G3-M07-12] TC_SECC_AC_VTB_PLCLinkStatus_006 TC_SECC_AC_VTB_PLCLinkStatus_007
[V2G3-M07-11]	X	—	—	—	—	—	—	—	Requirement is only testable if a corresponding PIXIT is considered (see RQs [V2G3-M07-05] - [V2G3-M07-10]) TC_SECC_AC_VTB_PLCLinkStatus_006
[V2G3-M07-12]	P	—	—	—	—	—	—	—	Requirement is only testable if a corresponding PIXIT is considered. Internal states and processing cannot be tested explicitly in SECC black box configuration, so the requirement can only be

© ISO 2018 – All rights reserved

Full document details: BS EN ISO 15118-5:2019

Requirement ID	Covered in Test Suite								TC ID(s)/Comment
	SECC				EVCC				
	EIM		PnC		EIM		PnC		
	AC	DC	AC	DC	AC	DC	AC	DC	
									tested partially TC_SECC_AC_VTB_PLCLinkStatus_007
[V2G3-M07-13]	—	—	—	—	P	P	P	P	Internal states cannot be tested explicitly in EVCC black box configuration, so the requirement can only be tested partially TC_EVCC_CMN_VTB_PLCLinkStatus_006 TC_EVCC_CMN_VTB_PLCLinkStatus_007
[V2G3-M07-14]	—	—	—	—	I	—	I	—	Tested indirectly by consideration of requirement [V2G3-M07-15] and [V2G3-M07-16] TC_EVCC_AC_VTB_PLCLinkStatus_003 TC_EVCC_AC_VTB_PLCLinkStatus_004 TC_EVCC_AC_VTB_PLCLinkStatus_005 TC_EVCC_AC_VTB_PLCLinkStatus_007 TC_EVCC_AC_VTB_PLCLinkStatus_008
[V2G3-M07-15]	—	—	—	—	X	—	X	—	Requirement is only testable if a corresponding PIXIT is considered (see RQ [V2G3-M07-13]) TC_EVCC_AC_VTB_PLCLinkStatus_003 TC_EVCC_AC_VTB_PLCLinkStatus_007
[V2G3-M07-16]	—	—	—	—	P	—	P	—	Requirement is only testable if a corresponding PIXIT is considered. Internal states and processing cannot be tested explicitly in EVCC black box configuration, so the requirement can only be tested partially TC_EVCC_AC_VTB_PLCLinkStatus_004 TC_EVCC_AC_VTB_PLCLinkStatus_005 TC_EVCC_AC_VTB_PLCLinkStatus_008
[V2G3-M07-17]	—	—	—	—	X	—	X	—	Requirement is only testable if a corresponding PIXIT is considered (Only min timer defined) TC_EVCC_AC_VTB_PLCLinkStatus_004 TC_EVCC_AC_VTB_PLCLinkStatus_005 TC_EVCC_AC_VTB_PLCLinkStatus_008
[V2G3-M07-18]	—	—	—	—	X	—	X	—	Requirement is only testable if a corresponding PIXIT is considered TC_EVCC_AC_VTB_PLCLinkStatus_005 TC_EVCC_AC_VTB_PLCLinkStatus_008
[V2G3-M07-19]	—	—	—	—	P	P	P	P	Stored logical network parameter are indirectly testable under consideration of [V2G3-M07-21]. Internal processing cannot be tested explicitly in EVCC black box test configuration, so the requirement can only be tested partially. Only testable under consideration of ISO 15118-4 TCs as Pre-Condition with the consideration of a the corresponding PIXIT. Group_[V2G3-M07-19]_[V2G3-M07-29]
[V2G3-M07-20]	P	P	P	P	—	—	—	—	Stored logical network parameter are indirectly testable under consideration of [V2G3-M07-21]. Internal processing cannot be tested explicitly in EVCC black box test configuration, so the requirement can only be tested partially. Only

© ISO 2018 – All rights reserved

AVA Documents Document Sharing Hub

Full document details: BS EN ISO 15118-5:2019

Requirement ID	Covered in Test Suite								TC ID(s)/Comment
	SECC				EVCC				
	EIM		PnC		EIM		PnC		
	AC	DC	AC	DC	AC	DC	AC	DC	
									testable under consideration of ISO 15118-4 TCs as Pre-Condition with the consideration of a the corresponding PIXIT. Group_[V2G3-M07-20]
[V2G3-M07-21]	I	I	I	I	I	I	I	I	For EV side only indirectly testable if the SDP process is executed. For EVSE side indirectly testable under consideration [V2G3-M07-24]. Only testable under consideration of ISO 15118-4 TCs as Pre-Condition with the consideration of a the corresponding PIXIT. Group_[V2G3-M07-21]
[V2G3-M07-22]	I	I	I	I	I	I	I	I	Indirectly testable under consideration [V2G3-M07-21]. Only testable under consideration of ISO 15118-4 TCs as Pre-Condition with the consideration of a the corresponding PIXIT. TC_EVCC_AC_VTB_PLCLinkStatus_001 TC_EVCC_DC_VTB_PLCLinkStatus_001 TC_SECC_AC_VTB_PLCLinkStatus_002 TC_SECC_DC_VTB_PLCLinkStatus_001
[V2G3-M07-23]	I	I	I	I	I	I	I	I	Indirectly testable under consideration [V2G3-M07-21]. Only testable under consideration of ISO 15118-4 TCs as Pre-Condition with the consideration of a the corresponding PIXIT. TC_EVCC_AC_VTB_PLCLinkStatus_001 TC_EVCC_DC_VTB_PLCLinkStatus_001 TC_SECC_AC_VTB_PLCLinkStatus_002 TC_SECC_DC_VTB_PLCLinkStatus_001
[V2G3-M07-24]	X	X	X	X	—	—	—	—	Last known parameter set can only be tested indirectly under consideration of [V2G3-M07-21]. Only testable under consideration of ISO 15118-4 TCs as Pre-Condition with the consideration of a the corresponding PIXIT. TC_SECC_AC_VTB_PLCLinkStatus_003 TC_SECC_DC_VTB_PLCLinkStatus_002
[V2G3-M07-25]	X	X	X	X	—	—	—	—	Only testable under consideration of ISO 15118-4 TCs as Pre-Condition with the consideration of a the corresponding PIXIT. TC_SECC_AC_VTB_PLCLinkStatus_010 TC_SECC_AC_VTB_PLCLinkStatus_012 TC_SECC_DC_VTB_PLCLinkStatus_006 TC_SECC_DC_VTB_PLCLinkStatus_007
[V2G3-M07-26]	I	I	I	I	—	—	—	—	Last known parameter set can only be tested indirectly under consideration of [V2G3-M07-21]. Only testable under consideration of ISO 15118-4 TCs as Pre-Condition with the consideration of a the corresponding PIXIT. TC_SECC_AC_VTB_PLCLinkStatus_002 TC_SECC_DC_VTB_PLCLinkStatus_001
[V2G3-M07-27]	X	X	X	X	—	—	—	—	Only testable under consideration of ISO 15118-4 TCs as Pre-Condition with the consideration of a the corresponding PIXIT.

© ISO 2018 – All rights reserved

Full document details: BS EN ISO 15118-5:2019

Requirement ID	Covered in Test Suite								TC ID(s)/Comment
	SECC				EVCC				
	EIM		PnC		EIM		PnC		
	AC	DC	AC	DC	AC	DC	AC	DC	
									TC_SECC_AC_VTB_PLCLinkStatus_004 TC_SECC_DC_VTB_PLCLinkStatus_003
[V2G3-M07-28]	—	—	—	—	X	X	X	X	Only testable under consideration of ISO 15118-4 TCs as Pre-Condition with the consideration of a the corresponding PIXIT. Group_[V2G3-M07-28]
[V2G3-M07-29]	—	—	—	—	I	I	I	I	Indirectly testable under consideration [V2G3-M07-21]. Only testable under consideration of ISO 15118-4 TCs as Pre-Condition with the consideration of a the corresponding PIXIT. Group_[V2G3-M07-19]_[V2G3-M07-29]
[V2G3-M07-30]	—	—	—	—	I	I	I	I	Indirectly testable under consideration [V2G3-M07-21]. Only testable under consideration of ISO 15118-4 TCs as Pre-Condition with the consideration of a the corresponding PIXIT. TC_EVCC_AC_VTB_PLCLinkStatus_001 TC_EVCC_DC_VTB_PLCLinkStatus_001
[V2G3-M07-31]	X	X	X	X	—	—	—	—	Only testable under consideration of ISO 15118-4 TCs as Pre-Condition with the consideration of a the corresponding PIXIT. Group_[V2G3-M07-31]_[V2G3-M07-32]
[V2G3-M07-32]	X	X	X	X	—	—	—	—	Requirement is only testable if a corresponding PIXIT is considered. Group_[V2G3-M07-31]_[V2G3-M07-32]
[V2G3-M07-33]	X	X	X	X	—	—	—	—	Requirement is only testable if a corresponding PIXIT is considered. TC_SECC_AC_VTB_PLCLinkStatus_003 TC_SECC_AC_VTB_PLCLinkStatus_012 TC_SECC_DC_VTB_PLCLinkStatus_002 TC_SECC_DC_VTB_PLCLinkStatus_007
[V2G3-M07-34]	P	P	P	P	P	P	P	P	Internal states cannot be tested explicitly in SECC/EVCC black box configuration, so the requirement can only be tested partially TC_EVCC_CMN_VTB_PLCLinkStatus_008 TC_SECC_CMN_VTB_PLCLinkStatus_005 TC_SECC_AC_VTB_PLCLinkStatus_006 TC_SECC_AC_VTB_PLCLinkStatus_007
[V2G3-M08-01]	P	P	P	P	P	P	P	P	Table 3 can only be tested partially TC_EVCC_CMN_VTB_CmValidate_001 TC_SECC_CMN_VTB_PLCLinkStatus_004
[V2G3-M09-01]	X	X	X	X	—	—	—	—	TC_SECC_CMN_VTB_PLCLinkStatus_004
[V2G3-M09-02]	I	I	I	I	I	I	I	I	Tested indirectly by consideration of requirement [V2G3-A09-45] or [V2G3-A09-37] TC_EVCC_CMN_VTB_AttenuationCharacterization_001 TC_EVCC_CMN_VTB_AttenuationCharacterization_002 TC_SECC_CMN_VTB_AttenuationCharacterization_

© ISO 2018 – All rights reserved

AVA Documents Document Sharing Hub

Full document details: BS EN ISO 15118-5:2019

Requirement ID	Covered in Test Suite								TC ID(s)/Comment
	SECC				EVCC				
	EIM		PnC		EIM		PnC		
	AC	DC	AC	DC	AC	DC	AC	DC	
									001 TC_SECC_CMN_VTB_AttenuationCharacterization_003 TC_SECC_CMN_VTB_AttenuationCharacterization_020
[V2G3-M09-03]	N	N	N	N	X	X	X	X	Cannot be tested explicitly in SECC black box test configuration for the profile defined in the respective column TC_EVCC_CMN_VTB_AttenuationCharacterization_001 TC_EVCC_CMN_VTB_AttenuationCharacterization_002
[V2G3-M09-04]	X	X	X	X	N	N	N	N	Cannot be tested explicitly in EVCC black box test configuration for the profile defined in the respective column TC_SECC_CMN_VTB_AttenuationCharacterization_001 TC_SECC_CMN_VTB_AttenuationCharacterization_003 TC_SECC_CMN_VTB_AttenuationCharacterization_020
[V2G3-M09-06]	—	—	—	—	X	X	X	X	TC_EVCC_CMN_VTB_CmValidate_001 TC_EVCC_CMN_VTB_CmValidate_002 TC_EVCC_CMN_VTB_CmValidate_003
[V2G3-M09-07]	—	—	—	—	P	P	P	P	Requirement is only testable if a corresponding PIXIT is considered. Only the start of the validation can be tested, so the Requirement can only be tested partially Group_[V2G3-M09-07]_[V2G3-A09-57]
[V2G3-M09-08]	—	—	—	—	P	P	P	P	Requirement is only testable if a corresponding PIXIT is considered. Only one case can be considered, so the requirement can only be tested partially TC_EVCC_CMN_VTB_CmValidate_013 TC_EVCC_CMN_VTB_CmValidate_015
[V2G3-M09-10]	I	I	I	I	—	—	—	—	Tested indirectly by consideration of requirement [V2G3-A09-87] TC_SECC_CMN_VTB_CmValidate_001 TC_SECC_CMN_VTB_CmValidate_009 TC_SECC_CMN_VTB_CmValidate_011 TC_SECC_CMN_VTB_CmValidate_012
[V2G3-M09-11]	—	—	—	—	X	X	X	X	TC_EVCC_CMN_VTB_CmValidate_001 TC_EVCC_CMN_VTB_CmValidate_002 TC_EVCC_CMN_VTB_CmValidate_003
[V2G3-M09-12]	P	P	P	P	P	P	P	P	Only a part of the message sequence will be considered, so the requirement can only be tested partially Group_[V2G3-M09-12]_[V2G3-A09-54]
[V2G3-M09-13]	X	X	X	X	—	—	—	—	Requirement is only testable if a corresponding

© ISO 2018 – All rights reserved

Full document details: BS EN ISO 15118-5:2019

Requirement ID	Covered in Test Suite								TC ID(s)/Comment
	SECC				EVCC				
	EIM		PnC		EIM		PnC		
	AC	DC	AC	DC	AC	DC	AC	DC	
									PIXIT is considered TC_SECC_CMN_VTB_CmValidate_009
[V2G3-M09-14]	—	—	—	—	X	X	X	X	Requirement is only testable if a corresponding PIXIT is considered TC_EVCC_CMN_VTB_CmValidate_001 TC_EVCC_CMN_VTB_CmValidate_002 TC_EVCC_CMN_VTB_CmValidate_003
[V2G3-M09-15]	N	N	N	N	P	P	P	P	Cannot be tested explicitly in SECC black box test configuration for the profile defined in the respective column due to strong configuration dependency on the SUT. Can only be tested partially with exemplarily parameterized duty cycles for the profile defined in the respective column TC_EVCC_CMN_VTB_CmValidate_002 TC_EVCC_CMN_VTB_CmValidate_003
[V2G3-M09-16]	I	I	I	I	I	I	I	I	Tested indirectly by consideration of the SDP process within sleep mode configuration. Requirement is only testable if a corresponding PIXIT is considered Group_[V2G3-M09-16]
[V2G3-M09-17]	P	P	P	P	P	P	P	P	Internal states and processing cannot be tested explicitly in SECC/EVCC black box configuration, so the requirement can only be tested partially TC_EVCC_AC_VTB_PLCLinkStatus_006 TC_EVCC_DC_VTB_PLCLinkStatus_003 TC_SECC_AC_VTB_PLCLinkStatus_008 TC_SECC_DC_VTB_PLCLinkStatus_005
[V2G3-M09-19]	P	P	P	P	P	P	P	P	Internal states and processing cannot be tested explicitly in SECC/EVCC black box configuration, so the requirement can only be tested partially TC_EVCC_CMN_VTB_PLCLinkStatus_002 TC_SECC_CMN_VTB_PLCLinkStatus_002
[V2G3-M12-01]	I	I	I	I	I	I	I	I	Tested indirectly by consideration of the SDP process within sleep mode configuration. Requirement is only testable if a corresponding PIXIT is considered Group_[V2G3-M12-01]
[V2G3-A06-05]	—	—	—	—	P	P	P	P	Requirement definition considers various possible scenarios, so the requirement can only be tested partially for exemplarily selected cases TC_EVCC_CMN_VTB_CmSlacParm_009
[V2G3-A08-01]	P	P	P	P	P	P	P	P	Table A.1 can only be tested partially Group_[V2G3-A08-01]
[V2G3-A09-01]	P	P	P	P	P	P	P	P	Only a part of the message sequence will be considered, so the requirement can only be tested partially Group_[V2G3-A09-01]_[V2G3-A09-17]

© ISO 2018 – All rights reserved

AVA Documents Document Sharing Hub

Full document details: BS EN ISO 15118-5:2019

Requirement ID	Covered in Test Suite								TC ID(s)/Comment
	SECC				EVCC				
	EIM		PnC		EIM		PnC		
	AC	DC	AC	DC	AC	DC	AC	DC	
[V2G3-A09-03]	P	P	P	P	—	—	—	—	Internal states cannot be tested explicitly in SECC black box configuration, so the requirement can only be tested partially Group_[V2G3-A09-03]
[V2G3-A09-04]	P	P	P	P	P	P	P	P	Table A.2 can only be tested partially Group_[V2G3-A09-04]

© ISO 2018 – All rights reserved

Documents
Document Sharing Hub
Full document details: BS EN ISO 15118-5:2019

Requirement ID	Covered in Test Suite								TC ID(s)/Comment
	SECC				EVCC				
	EIM		PnC		EIM		PnC		
	AC	DC	AC	DC	AC	DC	AC	DC	
[V2G3-A09-05]	—	—	—	—	P	P	P	P	Internal timings cannot be tested explicitly in EVCC black box configuration, so the requirement can only be tested partially Group_[V2G3-A09-05]_[V2G3-M06-13]
[V2G3-A09-07]	—	—	—	—	P	P	P	P	Internal timings cannot be tested explicitly in EVCC black box configuration, so the requirement can only be tested partially Group_[V2G3-A09-07]_[V2G3-A09-08]_[V2G3-A09-10]
[V2G3-A09-08]	—	—	—	—	I	I	I	I	Tested indirectly by consideration of requirement [V2G3-A09-10] Group_[V2G3-A09-07]_[V2G3-A09-08]_[V2G3-A09-10]
[V2G3-A09-09]	—	—	—	—	I	I	I	I	Tested indirectly by consideration of requirement [V2G3-A09-10] Group_[V2G3-A09-09]
[V2G3-A09-10]	—	—	—	—	P	P	P	P	Internal states and timings cannot be tested explicitly in EVCC black box configuration, so the requirement can only be tested partially Group_[V2G3-A09-07]_[V2G3-A09-08]_[V2G3-A09-10]
[V2G3-A09-11]	I	I	I	I	—	—	—	—	Tested indirectly by consideration of requirement [V2G3-A09-15] Group_[V2G3-A09-11]_[V2G3-A09-15]
[V2G3-A09-12]	I	I	I	I	—	—	—	—	Tested indirectly by consideration of requirement [V2G3-A09-13] TC_SECC_CMN_VTB_CmSlacParm_004 TC_SECC_CMN_VTB_CmSlacParm_005 TC_SECC_CMN_VTB_CmSlacParm_006
[V2G3-A09-13]	P	P	P	P	—	—	—	—	Internal states and timings cannot be tested explicitly in SECC black box configuration, so the requirement can only be tested partially TC_SECC_CMN_VTB_CmSlacParm_004 TC_SECC_CMN_VTB_CmSlacParm_005 TC_SECC_CMN_VTB_CmSlacParm_006
[V2G3-A09-14]	I	I	I	I	—	—	—	—	Tested indirectly by consideration of requirement [V2G3-A09-13] TC_SECC_CMN_VTB_CmSlacParm_005 TC_SECC_CMN_VTB_CmSlacParm_006
[V2G3-A09-15]	P	P	P	P	—	—	—	—	Internal timings cannot be tested explicitly in SECC black box configuration, so the requirement can only be tested partially Group_[V2G3-A09-11]_[V2G3-A09-15]
[V2G3-A09-16]	P	P	P	P	—	—	—	—	Requirement definition considers various possible scenarios, so the requirement can only be tested partially for exemplarily selected cases TC_SECC_CMN_VTB_AttenuationCharacterization_002

© ISO 2018 – All rights reserved

Documents
Document Sharing Hub
Full document details: BS EN ISO 15118-5:2019

Requirement ID	Covered in Test Suite								TC ID(s)/Comment
	SECC				EVCC				
	EIM		PnC		EIM		PnC		
	AC	DC	AC	DC	AC	DC	AC	DC	
[V2G3-A09-17]	P	P	P	P	P	P	P	P	Only a part of the message sequence will be considered, so the requirement can only be tested partially Group_[V2G3-A09-01]_[V2G3-A09-17]
[V2G3-A09-18]	P	P	P	P	P	P	P	P	Only a part of the message sequence will be considered, so the requirement can only be tested partially Group_[V2G3-A09-18]
[V2G3-A09-23]	P	P	P	P	P	P	P	P	Table A.4 can only be tested partially Group_[V2G3-A09-23]
[V2G3-A09-25]	—	—	—	—	P	P	P	P	Internal timings cannot be tested explicitly in EVCC black box configuration, so the requirement can only be tested partially Group_[V2G3-A09-25]_[V2G3-A09-28]
[V2G3-A09-28]	—	—	—	—	P	P	P	P	Internal states cannot be tested explicitly in EVCC black box configuration, so the requirement can only be tested partially Group_[V2G3-A09-25]_[V2G3-A09-28]
[V2G3-A09-30]	—	—	—	—	I	I	I	I	Tested indirectly by consideration of requirement [V2G3-A09-123] Group_[V2G3-A09-30]_[V2G3-A09-31]_[V2G3-A09-32]
[V2G3-A09-31]	—	—	—	—	I	I	I	I	Tested indirectly by consideration of requirement [V2G3-A09-123] Group_[V2G3-A09-30]_[V2G3-A09-31]_[V2G3-A09-32]
[V2G3-A09-32]	—	—	—	—	I	I	I	I	Tested indirectly by consideration of requirement [V2G3-A09-123] Group_[V2G3-A09-30]_[V2G3-A09-31]_[V2G3-A09-32]
[V2G3-A09-33]	—	—	—	—	I	I	I	I	Tested indirectly by consideration of requirement [V2G3-A09-37] TC_EVCC_CMN_VTB_AttenuationCharacterization_002
[V2G3-A09-34]	—	—	—	—	P	P	P	P	TC_EVCC_CMN_VTB_CmSlacMatch_012
[V2G3-A09-35]	—	—	—	—	I	I	I	I	Tested indirectly by consideration of requirement [V2G3-A09-123] Group_[V2G3-A09-35]
[V2G3-A09-36]	—	—	—	—	I	I	I	I	Tested indirectly by consideration of requirement [V2G3-A09-123] TC_EVCC_CMN_VTB_AttenuationCharacterization_011
[V2G3-A09-37]	—	—	—	—	P	P	P	P	Internal timings cannot be tested explicitly in EVCC black box configuration, so the requirement can only be tested partially TC_EVCC_CMN_VTB_AttenuationCharacterization_001 TC_EVCC_CMN_VTB_AttenuationCharacterization_002

© ISO 2018 – All rights reserved

Full document details: BS EN ISO 15118-5:2019

Requirement ID	Covered in Test Suite								TC ID(s)/Comment
	SECC				EVCC				
	EIM		PnC		EIM		PnC		
	AC	DC	AC	DC	AC	DC	AC	DC	
									TC_EVCC_AC_VTB_AttenuationCharacterization_001 TC_EVCC_AC_VTB_AttenuationCharacterization_002
[V2G3-A09-38]	—	—	—	—	P	P	P	P	Only one case can be considered, so the requirement can only be tested partially Group_[V2G3-A09-38]
[V2G3-A09-39]	I	I	I	I	—	—	—	—	Tested indirectly by consideration of requirement [V2G3-A09-40] TC_SECC_CMN_VTB_AttenuationCharacterization_012
[V2G3-A09-40]	I	I	I	I	—	—	—	—	Tested indirectly by consideration of requirement [V2G3-A09-40] TC_SECC_CMN_VTB_AttenuationCharacterization_012
[V2G3-A09-41]	I	I	I	I	—	—	—	—	Tested indirectly by consideration of requirement [V2G3-A09-41] Group_[V2G3-A09-41]
[V2G3-A09-42]	I	I	I	I	—	—	—	—	Tested indirectly by consideration of requirement [V2G3-A09-45] Group_[V2G3-A09-42]_[V2G3-A09-43]
[V2G3-A09-43]	I	I	I	I	—	—	—	—	Tested indirectly by consideration of requirement [V2G3-A09-45] Group_[V2G3-A09-42]_[V2G3-A09-43]
[V2G3-A09-44]	I	I	I	I	—	—	—	—	Tested indirectly by consideration of requirement [V2G3-A09-45] Group_[V2G3-A09-44]_[V2G3-A09-45]
[V2G3-A09-45]	P	P	P	P	—	—	—	—	Internal timings cannot be tested explicitly in SECC black box configuration, so the requirement can only be tested partially Group_[V2G3-A09-44]_[V2G3-A09-45]
[V2G3-A09-46]	P	P	P	P	—	—	—	—	Internal states cannot be tested explicitly in SECC black box configuration, so the requirement can only be tested partially Group_[V2G3-A09-46]
[V2G3-A09-47]	I	I	I	I	—	—	—	—	Tested indirectly by consideration of requirement [V2G3-A09-46] Group_[V2G3-A09-47]
[V2G3-A09-50]	—	—	—	—	P	P	P	P	Requirement is only testable if a corresponding PIXIT is considered. Only one case can be considered, so the requirement can only be tested partially TC_EVCC_CMN_VTB_CmValidate_016 TC_EVCC_CMN_VTB_CmValidate_017
[V2G3-A09-51]	—	—	—	—	P	P	P	P	Requirement is only testable if a corresponding PIXIT is considered. Only one case can be considered, so the requirement can only be tested partially

© ISO 2018 – All rights reserved

Documents
Document Sharing Hub

Full document details: BS EN ISO 15118-5:2019

Requirement ID	Covered in Test Suite								TC ID(s)/Comment
	SECC				EVCC				
	EIM		PnC		EIM		PnC		
	AC	DC	AC	DC	AC	DC	AC	DC	
									TC_EVCC_CMN_VTB_CmValidate_013 TC_EVCC_CMN_VTB_CmValidate_014 TC_EVCC_CMN_VTB_CmValidate_015
[V2G3-A09-52]	P	P	P	P	P	P	P	P	Only a part of the message sequence will be considered, so the requirement can only be tested partially Group_[V2G3-A09-52]
[V2G3-A09-53]	X	X	X	X	—	—	—	—	Requirement is only testable if a corresponding PIXIT is considered TC_SECC_CMN_VTB_CmValidate_010
[V2G3-A09-54]	P	P	P	P	P	P	P	P	Requirement is only testable if a corresponding PIXIT is considered. Table A.5 can only be tested partially Group_[V2G3-M09-12]_[V2G3-A09-54]
[V2G3-A09-56]	I	I	I	I	I	I	I	I	Requirement is only testable if a corresponding PIXIT is considered. Tested indirectly by consideration of requirement [V2G3-A09-57] or [V2G3-A09-58] Group_[V2G3-A09-56]
[V2G3-A09-57]	—	—	—	—	X	X	X	X	Requirement is only testable if a corresponding PIXIT is considered Group_[V2G3-M09-07]_[V2G3-A09-57]
[V2G3-A09-58]	P	P	P	P	—	—	—	—	Requirement is only testable if a corresponding PIXIT is considered. Only one case can be considered, so the requirement can only be tested partially TC_SECC_CMN_VTB_CmValidate_001 TC_SECC_CMN_VTB_CmValidate_009 TC_SECC_CMN_VTB_CmValidate_010 TC_SECC_CMN_VTB_CmValidate_011 TC_SECC_CMN_VTB_CmValidate_012
[V2G3-A09-59]	I	I	I	I	I	I	I	I	Requirement is only testable if a corresponding PIXIT is considered. Tested indirectly by consideration of requirement [V2G3-A09-60] or [V2G3-A09-61] Group_[V2G3-A09-59]
[V2G3-A09-60]	—	—	—	—	X	X	X	X	Requirement is only testable if a corresponding PIXIT is considered Group_[V2G3-A09-60]
[V2G3-A09-61]	P	P	P	P	—	—	—	—	Requirement is only testable if a corresponding PIXIT is considered. Only one case can be considered, so the requirement can only be tested partially TC_SECC_CMN_VTB_CmValidate_001 TC_SECC_CMN_VTB_CmValidate_011 TC_SECC_CMN_VTB_CmValidate_012
[V2G3-A09-62]	—	—	—	—	P	P	P	P	Requirement is only testable if a corresponding PIXIT is considered. Internal timings cannot be tested explicitly in EVCC black box configuration

© ISO 2018 – All rights reserved

Documents
Document Sharing Hub
Full document details: BS EN ISO 15118-5:2019