BS EN ISO 15494:2018+A1:2020

BSI Standards Publication

Plastics piping systems for industrial applications — Polybutene (PB), polyethylene (PE), polyethylene of raised temperature resistance (PE-RT), crosslinked polyethylene (PE-X), polypropylene (PP) — Metric series for specifications for components and the system

Documents
Document Sharing Hub

Full document details: BS EN ISO 15494:2018+A1:2020

National foreword

This British Standard is the UK implementation of EN ISO 15494:2018+A1:2020. It is identical to ISO 15494:2015, incorporating amendment 1:2020. It supersedes BS EN ISO 15494:2018, which is withdrawn.

The start and finish of text introduced or altered by amendment is indicated in the text by tags. Tags indicating changes to ISO text carry the number of the ISO amendment. For example, text altered by ISO amendment 1 is indicated by ▌A1⟩ ⟨A1▌.

The UK participation in its preparation was entrusted to Technical Committee PRI/88/2, Plastics piping for pressure applications.

A list of organizations represented on this committee can be obtained on request to its committee manager.

This publication does not purport to include all the necessary provisions of a contract. Users are responsible for its correct application.

© The British Standards Institution 2020
Published by BSI Standards Limited 2020

ISBN 978 0 539 04911 4

ICS 23.040.01

Compliance with a British Standard cannot confer immunity from legal obligations.

This British Standard was published under the authority of the Standards Policy and Strategy Committee on 30 November 2018.

Amendments/corrigenda issued since publication

Date	Text affected
30 November 2020	Implementation of ISO amendment 1:2020 with CEN endorsement A1:2020

Documents
Document Sharing Hub

Full document details: BS EN ISO 15494:2018+A1:2020

EUROPEAN STANDARD

NORME EUROPÉENNE

EUROPÄISCHE NORM

EN ISO 15494:2018 +A1

November 2020

ICS 23.040.01

English Version

Plastics piping systems for industrial applications - Polybutene (PB), polyethylene (PE), polyethylene of raised temperature resistance (PE-RT), crosslinked polyethylene (PE-X), polypropylene (PP) - Metric series for specifications for components and the system (ISO 15494:2015)

Systèmes de canalisations en matières plastiques pour les applications industrielles - Polybutène (PB), polyéthylène (PE), polyéthylène de meilleure résistance à la température (PE-RT), polyéthylène réticulé (PE-X), polypropylène (PP) - Séries métriques pour les spécifications pour les composants et le système (ISO 15494:2015)

Kunststoff-Rohrleitungssysteme für industrielle Anwendungen - Polybuten (PB), Polyethylen (PE), Polyethylen erhöhter Temperaturbeständigkeit (PE-RT), vernetztes Polyethylen (PE-X), Polypropylen (PP) - Metrische Reihen für Anforderungen an Rohrleitungsteile und das Rohrleitungssystem (ISO 15494:2015)

This European Standard was approved by CEN on 19 February 2018.

CEN members are bound to comply with the CEN/CENELEC Internal Regulations which stipulate the conditions for giving this European Standard the status of a national standard without any alteration. Up-to-date lists and bibliographical references concerning such national standards may be obtained on application to the CEN-CENELEC Management Centre or to any CEN member.

This European Standard exists in three official versions (English, French, German). A version in any other language made by translation under the responsibility of a CEN member into its own language and notified to the CEN-CENELEC Management Centre has the same status as the official versions.

CEN members are the national standards bodies of Austria, Belgium, Bulgaria, Croatia, Cyprus, Czech Republic, Denmark, Estonia, Finland, Former Yugoslav Republic of Macedonia, France, Germany, Greece, Hungary, Iceland, Ireland, Italy, Latvia, Lithuania, Luxembourg, Malta, Netherlands, Norway, Poland, Portugal, Romania, Serbia, Slovakia, Slovenia, Spain, Sweden, Switzerland, Turkey and United Kingdom.

EUROPEAN COMMITTEE FOR STANDARDIZATION
COMITÉ EUROPÉEN DE NORMALISATION
EUROPÄISCHES KOMITEE FÜR NORMUNG

CEN-CENELEC Management Centre: Rue de la Science 23, B-1040 Brussels

© 2018 CEN All rights of exploitation in any form and by any means reserved worldwide for CEN national Members

Ref. No. EN ISO 15494:2018+A1:2020: E

Documents
Document Sharing Hub

Full document details: BS EN ISO 15494:2018+A1:2020

European foreword

The text of ISO 15494:2015 has been prepared by Technical Committee ISO/TC 138 "Plastics pipes, fittings and valves for the transport of fluids" of the International Organization for Standardization (ISO) and has been taken over as EN ISO 15494:2018 by Technical Committee CEN/TC 155 "Plastics piping systems and ducting systems" the secretariat of which is held by NEN.

This European Standard shall be given the status of a national standard, either by publication of an identical text or by endorsement, at the latest by April 2019, and conflicting national standards shall be withdrawn at the latest by April 2019.

Attention is drawn to the possibility that some of the elements of this document may be the subject of patent rights. CEN shall not be held responsible for identifying any or all such patent rights.

This document supersedes EN ISO 15494:2015.

This document has been prepared under a mandate given to CEN by the European Commission and the European Free Trade Association, and supports essential requirements of EU Directive(s).

For the relationship with EU Directive(s) see informative Annex ZA, which is an integral part of this document.

According to the CEN-CENELEC Internal Regulations, the national standards organizations of the following countries are bound to implement this European Standard: Austria, Belgium, Bulgaria, Croatia, Cyprus, Czech Republic, Denmark, Estonia, Finland, Former Yugoslav Republic of Macedonia, France, Germany, Greece, Hungary, Iceland, Ireland, Italy, Latvia, Lithuania, Luxembourg, Malta, Netherlands, Norway, Poland, Portugal, Romania, Serbia, Slovakia, Slovenia, Spain, Sweden, Switzerland, Turkey and the United Kingdom.

Endorsement notice

The text of ISO 15494:2015 has been approved by CEN as EN ISO 15494:2018 without any modification.

Foreword to amendment A1

This document (EN ISO 15494:2018/A1:2020) has been prepared by Technical Committee ISO/TC 138 "Plastics pipes, fittings and valves for the transport of fluids" in collaboration with Technical Committee CEN/TC 155 "Plastics piping systems and ducting systems" the secretariat of which is held by NEN.

This European Standard shall be given the status of a national standard, either by publication of an identical text or by endorsement, at the latest by May 2021, and conflicting national standards shall be withdrawn at the latest by May 2021.

Attention is drawn to the possibility that some of the elements of this document may be the subject of patent rights. CEN shall not be held responsible for identifying any or all such patent rights.

According to the CEN-CENELEC Internal Regulations, the national standards organizations of the following countries are bound to implement this European Standard: Austria, Belgium, Bulgaria, Croatia, Cyprus, Czech Republic, Denmark, Estonia, Finland, France, Germany, Greece, Hungary, Iceland, Ireland, Italy, Latvia, Lithuania, Luxembourg, Malta, Netherlands, Norway, Poland, Portugal, Republic of North Macedonia, Romania, Serbia, Slovakia, Slovenia, Spain, Sweden, Switzerland, Turkey and the United Kingdom.

Endorsement notice

The text of ISO 15494:2015/Amd 1:2020 has been approved by CEN as EN ISO 15494:2018/A1:2020 without any modification.

Documents
Document Sharing Hub
Full document details: BS EN ISO 15494:2018+A1:2020

Annex ZA
(informative)

Relationship between this European Standard and the essential requirements of Directive 2014/68/EU for pressure equipment aimed to be covered

This European Standard has been prepared under a Commission's standardization request to provide one voluntary means of conforming to essential requirements of Directive 2014/68/EU of the European Parliament and of the Council of 15 May 2014 on the harmonisation of the laws of the Member States relating to the making available on the market of pressure equipment.

Once this standard is cited in the Official Journal of the European Union under that Directive, compliance with the normative clauses of this standard given in Table ZA.1 confers, within the limits of the scope of this standard, a presumption of conformity with the corresponding essential requirements of that Directive, and associated EFTA regulations.

Table ZA.1 — Correspondence between this European Standard and Annex I of the Directive 2014/68/EU

Essential Requirements of Directive 2014/68/EU	Clause(s)/sub-clause(s) of this EN	Remarks/Notes
2.2.1	A.1, B.1, C.1, D.1, E.1	Design for adequate strength
2.6	10.1	Corrosion protection
3.1.2	12	Permanent joining
3.2.2 and 7.4	8.2.1, 8.2.2, 8.2.3 A.4.1/2, B.4.1/2, C.4.1/2, D.4.1/2, E.4.1/2 A.6, B.6, C.6, D.6, E.6	Proof testing
3.3	16	Marking
4.1.a), 4.1.c)	5.2, A.1, B.1, C.1, D.1, E.1	Materials properties

WARNING 1 — Presumption of conformity stays valid only as long as a reference to this European Standard is maintained in the list published in the Official Journal of the European Union. Users of this standard should consult frequently the latest list published in the Official Journal of the European Union.

WARNING 2 — Other Union legislation may be applicable to the product(s) falling within the scope of this standard.

Documents
Document Sharing Hub

Full document details: BS EN ISO 15494:2018+A1:2020

Contents

Page

Foreword ..... **vi**
Introduction ..... **vii**
1 Scope **1**
2 Normative references **2**
3 Terms and definitions **4**
3.1 Geometrical definitions 4
3.2 Material definitions 5
3.3 Definitions related to material characteristics 6
3.4 Definitions related to service conditions 6
4 Symbols and abbreviated terms **7**
4.1 Symbols 7
4.2 Abbreviated terms 8
5 Material **9**
5.1 General 9
5.2 Hydrostatic strength properties 9
5.3 Material characteristics 9
5.4 Reprocessable and recyclable material 9
5.5 Materials for components not made from PB, PE, PE-RT, PE-X, or PP 9
5.5.1 General 9
5.5.2 Metallic materials 10
5.5.3 Sealing materials 10
5.5.4 Other materials 10
6 General characteristics **10**
6.1 Appearance 10
6.2 Colour 10
6.3 Influence of UV radiation 10
7 Geometrical characteristics **10**
7.1 General 10
7.2 Mean outside diameters, out-of-roundness (ovality), and tolerances 11
7.3 Wall thicknesses and related tolerances 11
7.4 Angles 11
7.5 Laying lengths 11
7.6 Threads 11
7.7 Mechanical fittings 11
7.8 Joint dimensions of valves 11
8 Mechanical characteristics **11**
8.1 Resistance to internal pressure of components 11
8.2 Calculation of the test pressure for components 12
8.2.1 Pipes 12
8.2.2 Fittings 12
8.2.3 Valves 12
8.2.4 Resistance to rapid crack propagation, RCP 12
9 Physical characteristics **12**
10 Chemical characteristics **13**
10.1 Effects on the component material(s) 13
10.2 Effects on the fluids 13
11 Electrical characteristics **13**
12 Performance requirements **13**
12.1 General 13

© ISO 2015 – All rights reserved
Documents
Document Sharing Hub
Full document details: BS EN ISO 15494:2018+A1:2020

12.2 Fusion compatibility ... 13
13 Classification of components ... 13
14 Design and installation ... 14
15 Declaration of conformity ... 14
16 Marking ... 14
16.1 General ... 14
16.2 Minimum required marking of pipes ... 14
16.3 Minimum required marking of fittings ... 15
16.4 Minimum required marking of valves ... 15
Annex A (normative) **Specific characteristics and requirements for industrial piping systems made from polybutene (PB)** ... **16**
Annex B (normative) **Specific characteristics and requirements for industrial piping systems made from polyethylene (PE)** ... **29**
Annex C (normative) **Specific characteristics and requirements for industrial piping systems made from polyethylene of raised temperature resistance (PE-RT)** ... **55**
Annex D (normative) **Specific characteristics and requirements for industrial piping systems made from crosslinked polyethylene (PE-X)** ... **61**
Annex E (normative) **Specific characteristics and requirements for industrial piping systems made from polypropylene (PP)** ... **71**
Annex F (informative) **Design and installation** ... **97**
Bibliography ... **98**

© ISO 2015 – All rights reserved

Documents
Document Sharing Hub
Full document details: BS EN ISO 15494:2018+A1:2020

Foreword

ISO (the International Organization for Standardization) is a worldwide federation of national standards bodies (ISO member bodies). The work of preparing International Standards is normally carried out through ISO technical committees. Each member body interested in a subject for which a technical committee has been established has the right to be represented on that committee. International organizations, governmental and non-governmental, in liaison with ISO, also take part in the work. ISO collaborates closely with the International Electrotechnical Commission (IEC) on all matters of electrotechnical standardization.

The procedures used to develop this document and those intended for its further maintenance are described in the ISO/IEC Directives, Part 1. In particular the different approval criteria needed for the different types of ISO documents should be noted. This document was drafted in accordance with the editorial rules of the ISO/IEC Directives, Part 2 (see www.iso.org/directives).

Attention is drawn to the possibility that some of the elements of this document may be the subject of patent rights. ISO shall not be held responsible for identifying any or all such patent rights. Details of any patent rights identified during the development of the document will be in the Introduction and/or on the ISO list of patent declarations received (see www.iso.org/patents).

Any trade name used in this document is information given for the convenience of users and does not constitute an endorsement.

For an explanation on the meaning of ISO specific terms and expressions related to conformity assessment, as well as information about ISO's adherence to the WTO principles in the Technical Barriers to Trade (TBT) see the following URL: Foreword - Supplementary information.

The committee responsible for this document is Technical Committee ISO/TC 138, *Plastics piping systems*, Subcommittee SC 3, *Plastics pipes and fittings for industrial applications*.

This second edition cancels and replaces the first edition (ISO 15494:2003), which has been technically revised.

© ISO 2015 – All rights reserved
Documents
Document Sharing Hub
Full document details: BS EN ISO 15494:2018+A1:2020

Introduction

This International Standard specifies the characteristics and requirements for a piping system and its components made from polybutene (PB), polyethylene (PE), polyethylene of raised temperature resistance (PE-RT), crosslinked polyethylene (PE-X), or polypropylene (PP), as applicable, intended to be used for industrial applications above ground or below ground by authorities, design engineers, certification bodies, inspection bodies, testing laboratories, manufacturers, and users.

At the date of publication of this International Standard, standards for piping systems of other plastics used for industrial applications are the following:

ISO 10931, *Plastics piping systems for industrial applications — Poly(vinylidene fluoride) (PVDF) — Specifications for components and the system*

ISO 15493, *Plastics piping systems for industrial applications — Acrylonitrile-butadiene-styrene (ABS), unplasticized poly(vinyl chloride) (PVC-U), chlorinated poly(vinyl chloride) (PVC-C) — Specifications for components and the system — Metric series*

© ISO 2015 – All rights reserved

Documents
Document Sharing Hub
Full document details: BS EN ISO 15494:2018+A1:2020

This page deliberately left blank

Documents
Document Sharing Hub

INTERNATIONAL STANDARD **ISO 15494:2015+A1:2020**

Plastics piping systems for industrial applications — Polybutene (PB), polyethylene (PE), polyethylene of raised temperature resistance (PE-RT), crosslinked polyethylene (PE-X), polypropylene (PP) — Metric series for specifications for components and the system

1 Scope

This International Standard specifies the characteristics and requirements for components such as pipes, fittings, and valves made from one of the following materials intended to be used for thermoplastics piping systems in the field of industrial applications above and below ground:

— polybutene (PB);

— polyethylene (PE);

— polyethylene of raised temperature resistance (PE-RT);

— crosslinked polyethylene (PE-X);

— polypropylene (PP).

NOTE 1 Requirements for industrial valves are given in this International Standard and/or in other standards. Valves are to be used with components conforming to this International Standard provided that they conform additionally to the relevant requirements of this International Standard.

This International Standard is applicable to either PB, PE, PE-RT, PE-X, or PP pipes, fittings, valves, and their joints and to joints with components of other plastics and non-plastic materials, depending on their suitability, intended to be used for the conveyance of liquid and gaseous fluids as well as solid matter in fluids for industrial applications such as the following:

— chemical plants;

— industrial sewerage engineering;

— power engineering (cooling and general purpose water);

— mining;

— electroplating and pickling plants;

— semiconductor industry;

— agricultural production plants;

— fire fighting;

— water treatment;

— geothermal.

NOTE 2 Where relevant, national regulations (e.g. water treatment) are applicable.

Other application areas are permitted if the requirements of this International Standard and/or applicable national requirements are fulfilled.

National regulations in respect of fire behaviour and explosion risk are applicable.

Documents
Document Sharing Hub

© ISO 2015 – All rights reserved

Full document details: BS EN ISO 15494:2018+A1:2020

The components have to withstand the mechanical, thermal, and chemical demands to be expected and have to be resistant to the fluids to be conveyed.

Characteristics and requirements which are applicable for all materials (PB, PE, PE-RT, PE-X, or PP) are covered by the relevant clauses of this International Standard. Those characteristics and requirements which are dependent on the material are given in the relevant normative annex for each material (see Table 1).

Table 1 — Material-specific annexes

Material	Annex
Polybutene (PB)	A
Polyethylene (PE)	B
Polyethylene of raised temperature resistance (PE-RT)	C
Crosslinked polyethylene (PE-X)	D
Polypropylene (PP)	E

Components conforming to any of the product standards listed in the bibliography or with national standards, as applicable, may be used with components conforming to this International Standard, provided that they conform to the requirements for joint dimensions and to the relevant requirements of this International Standard.

2 Normative references

The following documents, in whole or in part, are normatively referenced in this document and are indispensable for its application. For dated references, only the edition cited applies. For undated references, the latest edition of the referenced document (including any amendments) applies.

ISO 7-1, *Pipe threads where pressure-tight joints are made on the threads — Part 1: Dimensions, tolerances and designation*

ISO 179-2, *Plastics — Determination of Charpy impact properties — Part 2: Instrumented impact test*

ISO 228-1, *Pipe threads where pressure-tight joints are not made on the threads — Part 1: Dimensions, tolerances and designation.*

ISO 472, *Plastics — Vocabulary*

ISO 1043-1, *Plastics — Symbols and abbreviated terms — Part 1: Basic polymers and their special characteristics*

ISO 1133-1, *Plastics — Determination of the melt mass-flow rate (MFR) and melt volume-flow rate (MVR) of thermoplastics — Part 1: Standard method*

ISO 1167-1, *Thermoplastics pipes, fittings and assemblies for the conveyance of fluids — Determination of the resistance to internal pressure — Part 1: General method*

ISO 1167-2, *Thermoplastics pipes, fittings and assemblies for the conveyance of fluids — Determination of the resistance to internal pressure — Part 2: Preparation of pipe test pieces*

ISO 1167-3, *Thermoplastics pipes, fittings and assemblies for the conveyance of fluids — Determination of the resistance to internal pressure — Part 3: Preparation of components*

ISO 1167-4, *Thermoplastics pipes, fittings and assemblies for the conveyance of fluids — Determination of the resistance to internal pressure — Part 4: Preparation of assemblies*

ISO 1183-1, *Plastics — Methods for determining the density of non-cellular plastics — Part 1: Immersion method, liquid pyknometer method and titration method*

© ISO 2015 – All rights reserved
Documents
Document Sharing Hub
Full document details: BS EN ISO 15494:2018+A1:2020

ISO 1183-2, *Plastics — Methods for determining the density of non-cellular plastics — Part 2: Density gradient column method*

ISO 2505, *Thermoplastics pipes — Longitudinal reversion — Test method and parameters*

ISO 3126, *Plastics piping systems — Plastics components — Determination of dimensions*

ISO 4065, *Thermoplastics pipes — Universal wall thickness table*

ISO 4427-1:2007, *Plastics piping systems — Polyethylene (PE) pipes and fittings for water supply — Part 1: General*

ISO 4437-2, *Plastics piping systems for the supply of gaseous fuels - Polyethylene (PE) — Part 2: Pipes*

ISO 6964, *Polyolefin pipes and fittings — Determination of carbon black content by calcination and pyrolysis — Test method and basic specification*

ISO 9080:2012, *Plastics piping and ducting systems — Determination of the long-term hydrostatic strength of thermoplastics materials in pipe form by extrapolation*

ISO 10147, *Pipes and fittings made of crosslinked polyethylene (PE-X) — Estimation of the degree of crosslinking by determination of the gel content*

ISO 11357-6, *Plastics — Differential scanning calorimetry (DSC) — Part 6: Determination of oxidation induction time (isothermal OIT) and oxidation induction temperature (dynamic OIT)*

ISO 11922-1, *Thermoplastics pipes for the conveyance of fluids — Dimensions and tolerances — Part 1: Metric series*

ISO 12162, *Thermoplastics materials for pipes and fittings for pressure applications — Classification, designation and design coefficient*

ISO 13477, *Thermoplastics pipes for the conveyance of fluids — Determination of resistance to rapid crack propagation (RCP) — Small-scale steady-state test (S4 test)*

ISO 13478, *Thermoplastics pipes for the conveyance of fluids — Determination of resistance to rapid crack propagation (RCP) — Full-scale test (FST)*

ISO 13760, *Plastics pipes for the conveyance of fluids under pressure — Miner's rule — Calculation method for cumulative damage*

ISO 14531-1, *Plastics pipes and fittings — Crosslinked polyethylene (PE-X) pipe systems for the conveyance of gaseous fuels — Metric series — Specifications — Part 1: Pipes*

ISO 15512, *Plastics — Determination of water content*

ISO 15853, *Thermoplastics materials — Preparation of tubular test pieces for the determination of the hydrostatic strength of materials used for injection moulding.*

ISO 16135, *Industrial valves — Ball valves of thermoplastics materials*

ISO 16136, *Industrial valves — Butterfly valves of thermoplastics materials*

ISO 16137, *Industrial valves — Check valves of thermoplastics materials*

ISO 16138, *Industrial valves — Diaphragm valves of thermoplastics materials*

ISO 16139, *Industrial valves — Gate valves of thermoplastics materials*

ISO 16871, *Plastics piping and ducting systems — Plastics pipes and fittings — Method for exposure to direct (natural) weathering*

ISO 18553, *Method for the assessment of the degree of pigment or carbon black dispersion in polyolefin pipes, fittings and compounds*

AVA Documents
Document Sharing Hub

© ISO 2015 – All rights reserved

Full document details: BS EN ISO 15494:2018+A1:2020

ISO 21787, *Industrial valves — Globe valves of thermoplastics materials*

IEC 60529, *Degrees of protection provided by enclosures (IP-code)*

EN 712, *Thermoplastics piping systems — End-load bearing mechanical joints between pressure pipes and fittings — Test method for resistance to pull-out under constant longitudinal force*

EN 12099, *Plastics piping systems — Polyethylene piping materials and components — Determination of volatile content*

3 Terms and definitions

For the purposes of this document, the terms and definitions given in ISO 472, ISO 1043-1, and the following apply.

3.1 Geometrical definitions

NOTE The symbols d_e and e correspond to d_{ey} and e_y, given in other International Standards such as ISO 11922-1.

3.1.1
nominal outside diameter
d_n
specified outside diameter assigned to a nominal size DN/OD

Note 1 to entry: The nominal inside diameter of a socket is equal to the nominal outside diameter of the corresponding pipe.

Note 2 to entry: It is expressed in millimetres.

3.1.2
outside diameter at any point
d_e
value of the measurement of the outside diameter through its cross-section at any point of the pipe, rounded to the next greater 0,1 mm

3.1.3
mean outside diameter
d_{em}
value of the measurement of the outer circumference of the pipe or spigot end of a fitting in any cross-section divided by π (= 3,142), rounded to the next greater 0,1 mm

3.1.4
mean inside diameter of a socket
arithmetical mean of two measured inside diameters perpendicular to each other

3.1.5
nominal size
DN/OD
numerical designation of the size of a component, other than a component designated by thread size, which is a convenient round number, approximately equal to the manufacturing dimension in millimetres (mm) and related to the outside diameter

3.1.6
nominal size of flange
DN
numerical designation of the size of a flange for reference purposes and related to the manufacturing dimension in millimetres

© ISO 2015 – All rights reserved
Documents
Document Sharing Hub
Full document details: BS EN ISO 15494:2018+A1:2020

3.1.7
out-of-roundness
ovality
difference between the maximum and the minimum outside diameter in the same cross-section of a pipe or spigot

3.1.8
nominal wall thickness
e_n
numerical designation of the wall thickness of a component, which is a convenient round number, approximately equal to the manufacturing dimension in millimetres (mm)

Note 1 to entry: For thermoplastics components conforming to the different annexes of ISO 15494, the value of the nominal wall thickness, e_n, is identical to the specified minimum wall thickness at any point, e_{min}.

3.1.9
wall thickness at any point
e
wall thickness at any point around the circumference of a component rounded to the next greater 0,1 mm

3.1.10
minimum wall thickness at any point
e_{min}
minimum value for the wall thickness at any point around the circumference of a component, as specified

Note 1 to entry: The symbol for the wall thickness of the fittings and valves body at any point is *E*.

3.1.11
pipe series
S
dimensionless number for pipe designation conforming to ISO 4065

Note 1 to entry: The relationship between the pipe series, S, and the standard dimension ratio, SDR, is given by the following formula as specified in ISO 4065:

$$S = \frac{SDR - 1}{2}$$

Note 2 to entry: Flanges are designated on the basis of PN.

3.1.12
standard dimension ratio
SDR
numerical designation of a pipe series, which is a convenient round number, approximately equal to the dimension ratio of the nominal outside diameter, d_n, and the nominal wall thickness, e_n

3.2 Material definitions

3.2.1
melt mass-flow rate
MFR
value relating to the viscosity of the molten material at a specified temperature and load

Note 1 to entry: It is expressed in grams per 10 min (g/10 min).

3.2.2
virgin material
material in a form such as granules or powder that has not been subjected to use or processing other than that required for its manufacture and to which no reprocessable or recyclable materials have been added

© ISO 2015 – All rights reserved

Documents
Document Sharing Hub
Full document details: BS EN ISO 15494:2018+A1:2020

3.2.3
own reprocessable material
material prepared from clean rejected unused pipes, fittings, or valves, including trimmings from the production of pipes, fittings, or valves, that will be reprocessed in a manufacturer's plant after having been previously processed by the same manufacturer in the production of components by, for example, injection-moulding or extrusion

Note 1 to entry: Only those thermoplastics parts of valves may be used which are made from material conforming to this International Standard.

3.3 Definitions related to material characteristics

3.3.1
lower confidence limit of the predicted hydrostatic strength
σ_{LPL}
quantity with the dimensions of stress, which represents the 97,5 % lower confidence limit of the predicted hydrostatic strength at a temperature, θ, and time, t

Note 1 to entry: It is expressed in megapascals.

3.3.2
minimum required strength
MRS
value of σ_{LPL} at 20 °C and 50 years, rounded down to the next smaller value of the R10 series or the R20 series

Note 1 to entry: The R10 series conforming to ISO 3 and the R20 series to ISO 497.

3.3.3
design stress
σ_{s}
allowable stress for a given application at 20 °C that is derived from the MRS by dividing it by the coefficient C

Note 1 to entry: Design stress can be calculated using the following formula:

$$\sigma_{\mathrm{s}} = \frac{\mathrm{MRS}}{C}$$

Note 2 to entry: It is expressed in megapascals.

3.3.4
design coefficient
C
coefficient with a value greater than one which takes into consideration service conditions as well as the properties of the components of a piping system other than those represented in the lower confidence limit

3.4 Definitions related to service conditions

3.4.1
nominal pressure
PN
numerical designation used for reference purposes related to the mechanical characteristics of the components of a piping system

Note 1 to entry: A pressure, in bar, with the numerical value of PN is identical with the pressure, PS, as defined by Reference [16] if both pressures are taken at 20 °C.

© ISO 2015 – All rights reserved
Documents
Document Sharing Hub
Full document details: BS EN ISO 15494:2018+A1:2020

Note 2 to entry: For plastics piping systems conveying water, it corresponds to the maximum continuous operating pressure in bar, which can be sustained for water at 20 °C for 50 years, based on the following minimum design coefficient:

$$PN = \frac{10\sigma_s}{[S]} = \frac{20\sigma_s}{SDR - 1}$$

where

σ_s is expressed in MPa;

PN is expressed in bar.

Note 3 to entry: 1 bar = 0,1 MPa = 10^5 Pa; 1 MPa= 1 N/mm^2.

3.4.2
hydrostatic stress
σ
stress induced in the wall of a pipe when an internal hydrostatic pressure is applied

Note 1 to entry: The hydrostatic stress is related to the applied internal hydrostatic pressure, in bar p, the wall thickness, e, at any point and the mean outside diameter, d_{em}, of a pipe and calculated using the following formula:

$$\sigma = p\frac{d_{em} - e_{min}}{20e_{min}}$$

Note 2 to entry: Formula is applicable for pipes only.

Note 3 to entry: It is expressed in megapascals.

3.4.3
long-term hydrostatic stress
σ_{LTHS}
quantity with the dimensions of stress, which represents the predicted mean strength at a temperature T and time t

Note 1 to entry: It is expressed in megapascals.

[SOURCE: ISO 9080:2012, 3.9]

4 Symbols and abbreviated terms

4.1 Symbols

C design coefficient (design factor)

d_e outside diameter (at any point)

d_{em} mean outside diameter

d_n nominal outside diameter

DN nominal size of flange

e wall thickness (at any point)

e_n nominal wall thickness

l_0 free length

© ISO 2015 – All rights reserved

Documents
Document Sharing Hub
Full document details: BS EN ISO 15494:2018+A1:2020

p	internal hydrostatic pressure
p_S	maximum allowable pressure
T	temperature
t	time
ρ	material density
σ	hydrostatic stress
σ_{LPL}	lower confidence limit of the predicted hydrostatic strength
σ_{LTHS}	long-term hydrostatic strength
σ_S	design stress

4.2 Abbreviated terms

MFR	melt mass-flow rate
MOP	maximum operating pressure
MRS	minimum required strength
OIT	oxidation induction time
PB	polybutene
PE	polyethylene
PE-RT	polyethylene of raised temperature resistance
PE-X	crosslinked polyethylene
PP	polypropylene
PP-H	polypropylene homopolymer
PP-B	polypropylene block-copolymer
PP-R	polypropylene random-copolymer
PP-RCT	polypropylene random-copolymer with modified crystallinity
PN	nominal pressure
S	pipe series S
SDR	standard dimension ratio
TIR	true impact rate

© ISO 2015 – All rights reserved
Documents
Document Sharing Hub
Full document details: BS EN ISO 15494:2018+A1:2020

5 Material

5.1 General

The material from which the components are made shall either be PB, PE, PE-RT, PE-X, or PP, as applicable, to which are added those additives that are needed to facilitate the manufacture of pipes, fittings, and valves conforming to this International Standard.

If additives are used, they shall be uniformly dispersed.

The additives shall not be used separately or together in quantities sufficient to impair the fabrication or fusion characteristics of the component or to impair the chemical, physical, or mechanical characteristics as specified in this International Standard.

5.2 Hydrostatic strength properties

The material shall be evaluated according to ISO 9080 by analysis of pressure tests carried out in accordance with ISO 1167-1 and ISO 1167-2 to classify the material in accordance with ISO 12162.

Conformity of the relevant material to the reference curves given for PB (see Annex A), PE (see Annex B), PE-RT (see Annex C), PE-X (see Annex D), and PP (see Annex E) shall be proven according to the applicable Annex of this International Standard. At least 97,5 % of the data points shall be on or above the reference curves. For design, these reference curves shall be used as a basis.

The material shall be classified by the raw material producer.

NOTE In some cases, the component manufacturer can be regarded as the raw material producer.

Where fittings and valves are manufactured from the same material as pipes, the material classification shall be the same as for pipes.

For the classification of a material intended only for the manufacture of fittings and valves, the test piece shall be an injection-moulded or extruded test piece in form of a pipe where a test pressure is applied according to ISO 1167-1. The free length shall be $3d_n$, as defined in ISO 1167-2 or ISO 15853.

5.3 Material characteristics

The details of the material characteristics of PB, PE, PE-RT, PE-X, and PP mechanical and physical properties with requirements are given in the applicable Annex of this International Standard.

5.4 Reprocessable and recyclable material

The use of own reprocessable material obtained during the production and testing of components according to this International Standard is permitted in addition to virgin material, with the exception of PE-X.

Reprocessable material obtained from external sources and recyclable material shall not be used.

5.5 Materials for components not made from PB, PE, PE-RT, PE-X, or PP

5.5.1 General

All components shall conform to the relevant International Standard(s). Alternative standards may be applied in cases where suitable International Standard(s) do not exist. In all cases, fitness for purpose of the components shall be demonstrated.

Materials and constituent elements used in making the relevant component (including rubber, greases, and any metal parts as may be used) shall have comparable resistance to the external and internal environments as all other elements of the piping system according to this International Standard.

AVA Documents
Document Sharing Hub

© ISO 2015 – All rights reserved

Full document details: BS EN ISO 15494:2018+A1:2020

Materials other than PB, PE, PE-RT, PE-X, or PP in contact with components conforming to this International Standard shall not adversely affect the performance of the components or initiate stress cracking.

5.5.2 Metallic materials

All metal parts susceptible to corrosion shall be adequately protected.

When dissimilar metallic materials are used which can be in contact with moisture, steps shall be taken to avoid the possibility of galvanic corrosion.

5.5.3 Sealing materials

Sealing materials shall have no detrimental effects on the properties of the components, joints, and assemblies.

5.5.4 Other materials

Greases or lubricants shall not exude onto fusion areas and shall not affect the long-term performance of materials conforming to this International Standard.

6 General characteristics

6.1 Appearance

When viewed without magnification, the internal and external surfaces of the components shall be smooth, clean, and free from scoring, cavities, and other surface defects to an extent that would prevent conformity to this International Standard. The components shall not contain visible impurities.

Each end of a component shall be square to its axis and shall be deburred.

6.2 Colour

The colour of the components depends on the material used and shall be as given for PB, PE, PE-RT, PE-X, or PP in the applicable Annex of this International Standard.

NOTE Attention is drawn to the need to take account of any relevant legislation relating to the colour coding of piping in respect of its purpose or contents for the location in which the components are intended to be used.

6.3 Influence of UV radiation

Components for external above ground installations shall be adequately protected against UV radiation or the material shall be resistant to UV radiation for the intended application. For products which are usually stored outside in direct sunlight prior to installation, the effect of UV radiation shall be taken into account. To assess materials for resistance to UV radiation for storage purposes, pipe is subject to a cumulative radiant exposure of ≥3,5 GJ/m^2 in accordance with ISO 16871. Following this exposure, the pipe is assessed for any significant change in mechanical properties.

7 Geometrical characteristics

7.1 General

The measurement shall not be made less than 24 h after manufacture.

Dimensions shall be measured in accordance with ISO 3126 at (23 ± 2) °C after being conditioned for at least 4 h unless specified otherwise in the relevant material annex.

© ISO 2015 – All rights reserved
Documents
Document Sharing Hub
Full document details: BS EN ISO 15494:2018+A1:2020

Indirect measurement during the stage of production is allowed at shorter time periods providing that evidence is shown of correlation.

The given figures are schematic sketches only, to indicate the relevant dimensions. They do not necessarily represent the manufactured component(s). The given dimensions shall be followed.

Dimensions not given shall be specified by the manufacturer.

7.2 Mean outside diameters, out-of-roundness (ovality), and tolerances

For components made from PB, PE, PE-RT, PE-X or PP, as applicable, the diameters, out-of-roundness (ovality) and related tolerances shall conform to the applicable annex of this International Standard.

The out-of-roundness (ovality) shall be measured at the point of manufacture.

7.3 Wall thicknesses and related tolerances

For components made from PB, PE, PE-RT, PE-X or PP, as applicable, the wall thicknesses and related tolerances shall conform to the applicable annex of this International Standard.

7.4 Angles

The permitted deviations from the nominal or declared angle for a nonlinear fitting shall be +/− 2° where the angle comprises the relevant change of axis of the flow through the fitting.

NOTE The preferred nominal angles for a nonlinear fitting are 45° or 90°.

7.5 Laying lengths

The laying lengths for fittings and valves shall be declared by the manufacturer.

The laying lengths are intended to assist in the design of moulds and are not intended to be used for quality control purposes. ISO 265-1 may be used as a guideline.

7.6 Threads

Threads used for jointing shall conform to ISO 7-1. Where a thread is used as a fastening thread for jointing an assembly (e.g. union nuts), a thread conforming to ISO 228-1 is preferred.

7.7 Mechanical fittings

Mechanical fittings such as adaptors, unions, compression fittings, and reducing bushes may be used provided that their joint dimensions are in accordance with the applicable dimensions of components conforming to this International Standard.

7.8 Joint dimensions of valves

The joint dimensions of valves shall conform to the relevant dimensions of pipes and fittings conforming to this International Standard.

8 Mechanical characteristics

8.1 Resistance to internal pressure of components

Components shall withstand the hydrostatic stress induced by internal hydrostatic pressure without bursting or leaking when tested in accordance with ISO 1167-1, ISO 1167-2, and ISO 1167-3 and the test conditions specified for PB, PE, PE-RT, PE-X, or PP in the applicable annex of this International Standard.

AVA Documents
Document Sharing Hub

© ISO 2015 – All rights reserved

Full document details: BS EN ISO 15494:2018+A1:2020

8.2 Calculation of the test pressure for components

8.2.1 Pipes

The hydrostatic test pressure, *p*, expressed in bar, shall be determined for pipes using Formula (1):

$$\sigma = p\frac{d_{\mathrm{em}} - e_{\mathrm{min}}}{20e_{\mathrm{min}}} \tag{1}$$

where

σ is the hydrostatic stress for PB, PE, PE-RT, PE-X, or PP conforming to the applicable Annex of this International Standard.

8.2.2 Fittings

The hydrostatic test pressure, *p*, expressed in bar, shall be determined for fittings using Formula (2). For S and SDR respectively, the value of the corresponding pipe shall be taken:

$$p = \frac{10\sigma}{[\mathrm{S}]} = \frac{20\sigma}{\mathrm{SDR} - 1} \tag{2}$$

8.2.3 Valves

The hydrostatic test pressure, *p*, expressed in bar, is defined for valves in ISO 16135, ISO 16136, ISO 16137, ISO 16138, ISO 16139, or ISO 21787, as applicable, depending on the valve type.

8.2.4 Resistance to rapid crack propagation, RCP

For a pipeline systems carrying air or a compressible gas, for design purposes, the resistance of the material to the phenomenon known as rapid crack propagation shall be taken into account (see ISO 4427-1:2007, Annex B). The critical pressure *pc* is dependent on the material, pipe diameter, and operating temperature.

The critical pressure *pc* measured in accordance with ISO 13477 S4 test or ISO 13478 Full Scale Test shall be greater than 1,5 times the maximum operating pressure of the pipeline system.

Information provided by the pipe or material supplier should be taken into account when designing an industrial pipeline system for the transport of air or a compressible gas. Polyethylene (PE) pipe produced in accordance with ISO 4437-2 for natural gas applications is resistant to RCP for diameters up to 90 mm operated at 4 bar and temperature above 0 °C. Testing has shown that SDR11 pipe in some PE 100 materials can be operated up to 10 bar at 0 °C dependent on diameter. Crosslinked polyethylene (PE-X) pipe produced in accordance with ISO 14531-1 has been shown to be resistant to RCP at temperatures down to −50 °C.

9 Physical characteristics

The physical characteristics of components made from PB, PE, PE-RT, PE-X, or PP shall conform to the applicable annex of this International Standard.

© ISO 2015 – All rights reserved
Documents
Document Sharing Hub
Full document details: BS EN ISO 15494:2018+A1:2020

10 Chemical characteristics

10.1 Effects on the component material(s)

Where fluids other than water are to be conveyed, the effect of the fluid on the component material should be considered.

NOTE 1 Guidance is given in ISO/TR 10358 or by the component manufacturer.

NOTE 2 If it is necessary to evaluate the chemical resistance of the pipe for a particular application, then the pipe can be classified in accordance with ISO 4433-1 and ISO 4433-2.

10.2 Effects on the fluids

Where fluids other than water are to be conveyed, the effect of the component material on the fluid should be considered.

11 Electrical characteristics

The electrical protection that shall be provided by the fusion process depends on the characteristics of the electricity power source.

NOTE The relevant component during the fusion process is part of an electrical system as defined in Reference [15] or Reference [13], respectively.

Protection against direct contacts with active parts (live conductors) is required in accordance with IEC 60529. This protection is a function of the work site conditions.

The surface finish of the terminal pins shall allow a minimum contact resistance.

12 Performance requirements

12.1 General

When components made from the same material conforming to this International Standard are jointed to each other, the pipes, fittings, valves, and the joints shall conform to the requirements of the applicable annex of this International Standard.

NOTE If test pressures defined for pipes are used for assemblies made from components of dissimilar materials (e.g. screwed joints, flanged joints), the resulting strain exceeds the strain occurring under service conditions. These strains unavoidably cause leakage. Therefore, in this International Standard, the time related strain behaviour of the assemblies is taken into account and the test pressures derived from the isochronous stress-strain-diagram are used.

12.2 Fusion compatibility

The manufacturer of components shall declare which components and materials conforming to this International Standard may be fused by using the same procedures (e.g. times, temperatures, fusion pressures) to conform to the requirements of this International Standard. If there is a need for deviation in fusion procedures, the manufacturer shall state this.

13 Classification of components

The classification of pipes shall be based on the pipe series, S, or the standard dimension ratio, SDR, or the nominal pressure, PN, as applicable.

The classification of fittings shall be based on the corresponding pipe together with the pipe series S or the standard dimension ratio, SDR, or the nominal pressure, PN, as applicable.

Documents
Document Sharing Hub

© ISO 2015 – All rights reserved

Full document details: BS EN ISO 15494:2018+A1:2020

Valves shall be classified in accordance with the requirements of ISO 16135, ISO 16136, ISO 16137, ISO 16138, ISO 16139, or ISO 21787, as applicable, depending on the valve type.

14 Design and installation

For the design and installation of thermoplastic piping systems for industrial applications, see Annex F.

15 Declaration of conformity

The manufacturer shall declare conformity to this International Standard by marking the component in accordance with Clause 16 and, under request, issue a statement of conformity.

16 Marking

16.1 General

Marking elements shall be printed or formed directly on the component or be on a label in such a way that after storage, weathering and handling, and the installation, legibility is maintained.

NOTE The manufacturer is not responsible for marking of the component being illegible due to actions caused during installation and use such as painting, scratching, covering, or by use of detergents, etc. unless agreed upon or specified by the manufacturer.

Marking shall not initiate cracks or other types of defects which adversely influence the performance of the component.

If printing is used, the colouring of the printed information shall differ from the basic colouring of the component.

The size of the marking shall be such that the marking is legible without magnification.

16.2 Minimum required marking of pipes

The minimum required marking of pipes shall conform to Table 2.

Pipes shall be marked at intervals of maximum 1 m, at least once per pipe.

Table 2 — Minimum required marking of pipes

Aspects	Marking or symbol[c]
Number of the International Standard	ISO 15494
Manufacturer's name and/or trade mark	*Name or symbol*
Nominal outside diameter, d_n	e.g. 110
Nominal wall thickness, e_n, or pipe series, S, or standard dimension ratio, SDR, or nominal pressure, PN	e.g. 10,0 or e.g. S 5 or SDR 11 or e.g. PN 10
Material[a]	e.g. PP-H
Manufacturer's information	[b]

[a] If different types of a material are available, this shall be marked, e.g. PP-H or PP-R.

[b] For providing traceability, the following details shall be given:

— production period, year and month, in figures or in code;

— name or code for the production site if the manufacturer is producing at different sites.

[c] Information on abbreviations may be found in Reference [14] and/or in national rules.

© ISO 2015 – All rights reserved
Documents
Document Sharing Hub
Full document details: BS EN ISO 15494:2018+A1:2020

16.3 Minimum required marking of fittings

The minimum required marking of fittings shall conform to Table 3, except for fittings with $d_n \leq 32$ mm, for which the minimum required marking shall be directly on the fitting, as follows:

— manufacturer's name and/or trade mark;

— nominal outside diameter(s);

— material;

— nominal wall thickness, e_n, or pipe series S or SDR or PN, as applicable.

Table 3 — Minimum required marking of fittings

Aspects	Marking or symbol[e]
Number of the standard[a]	ISO 15494
Manufacturer's name and/or trade mark	*Name or symbol*
Nominal outside diameter(s), d_n	e.g. 63-32-63
Nominal wall thickness, e_n, or pipe series, S, or standard dimension ratio, SDR, or nominal pressure, PN	e.g. 5,8 or e.g. S 5 or SDR 11 or e.g. PN 10
Nominal size DN[b]	e.g. DN 50
Material[c]	e.g. PP-H
Manufacturer's information	[d]

[a] This information may either be marked directly on the fitting or on a label attached to the fitting or on the packaging. If different types of a material are available, this shall be marked, e.g. PP-H or PP-R.

[b] Applicable to flanges only.

[c] If different types of material are available, this shall be marked directly on the fitting or on a label attached to the fitting or on the packaging.

[d] For providing traceability, the following details shall be given:

— production period, year and month, in figures or in code;

— name or code for the production site if the manufacturer is producing at different sites.

[e] Information on abbreviations may be found in Reference [14] and/or in national rules.

16.4 Minimum required marking of valves

Valves shall be marked in accordance with the requirements of ISO 16135, ISO 16136, ISO 16137, ISO 16138, ISO 16139, or ISO 21787, as applicable, depending on the valve type.

© ISO 2015 – All rights reserved

Documents
Document Sharing Hub
Full document details: BS EN ISO 15494:2018+A1:2020

Annex A
(normative)

Specific characteristics and requirements for industrial piping systems made from polybutene (PB)

A.1 Material

A.1.1 Material for components

To prove conformance with the reference curves given in Figure A.1, the material shall be tested in accordance with 5.2 at 20 °C, 60 °C to 80 °C, and 95 °C as well as at various hydrostatic (hoop) stresses in such a way that at each temperature, at least three failure times fall in each of the following time intervals. Conformance with the reference lines should be demonstrated by plotting the individual experimental results on the graph. At least 97,5 % of them should lie on or above the following reference line:

— 10 h to 100 h;

— 100 h to 1 000 h;

— 1 000 h to 8 760 h;

— >8 760 h.

In tests lasting more than 8 760 h, any time which is reached at a certain stress and time at least on or above the relevant reference curve may be considered as failure time.

The values of the minimum required hydrostatic strength (see reference curves given in Figure A.1) in the temperature range of 10 °C to 110 °C are calculated using Formula (A.1) and Formula (A.2). The dotted lines of the reference curves apply if tests with longer testing times are carried out at 80 °C, 90 °C, 95 °C, and 110 °C, as applicable. The longer testing times shall be deduced from the extrapolation time limits given in ISO 9080:2012.

First branch (i.e. the left hand portion of the curves as shown in Figure A.1).

— PB: $$\log t = -430{,}866 - 125010{,}0\frac{\log\sigma}{T} + 173892{,}7\cdot\frac{1}{T} + 290{,}0569\cdot\log\sigma \quad \text{(A.1)}$$

Second branch (i.e. the right hand portion of the curves as shown in Figure A.1).

— PB: $$\log t = -129{,}895 - 37262{,}7\frac{\log\sigma}{T} + 52556{,}48\cdot\frac{1}{T} + 88{,}56735\cdot\log\sigma \quad \text{(A.2)}$$

NOTE The calculation for PB is based on ISO 12230.

© ISO 2015 – All rights reserved
Documents
Document Sharing Hub
Full document details: BS EN ISO 15494:2018+A1:2020

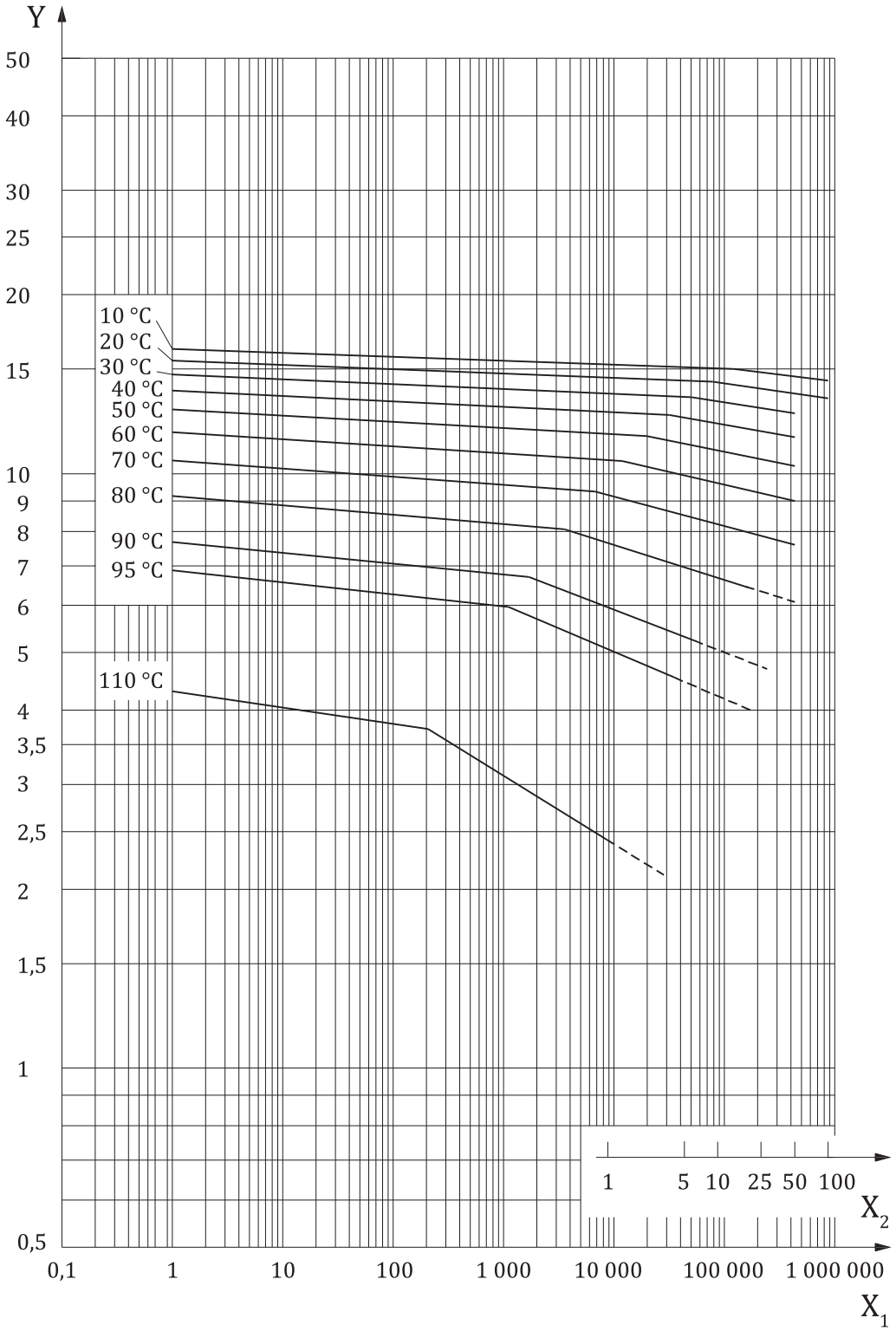

Key

X_1 time to failure, in hours (h)

X_2 time to failure, in years

Y hoop stress, in megapascal (MPa)

Figure A.1 — Minimum required hydrostatic strength curves for PB

© ISO 2015 – All rights reserved

Documents
Document Sharing Hub
Full document details: BS EN ISO 15494:2018+A1:2020

A.1.2 MRS-value

When evaluated in accordance with 5.2, PB shall have a minimum required strength, MRS, at least equal to 12,5 MPa.

A.1.3 Material characteristics

The material from which the components are manufactured shall conform to the requirements given in Table A.1.

Table A.1 — Material characteristics of PB

Characteristic	Requirements[a]	Test parameters		Test method
Pigment dispersion	≤Grade 3	Preparation of test pieces	Compression or microtome cut [b]	ISO 18553
Thermal stability tested by resistance to internal pressure at 110 °C	No failure during the test period	End caps Orientation Conditioning period Type of test Hydrostatic (hoop) stress Test temperature Test period	Type A according to ISO 1167-1 Free According to ISO 1167-1 Water-in-air 2,4 MPa 110 °C 8 760 h	ISO 1167-1 ISO 1167-2

[a] Conformity to the requirements shall be declared by the raw material producer.

[b] In case of dispute, the compression method shall be used.

A.1.4 Crystallization

Due to the slow crystallization, crystalline transformation, and shrinkage which takes places after PB compounds are cooled from the melt, physical and mechanical testing in accordance with A.4.1 and measurement of dimensions shall be delayed after extrusion or moulding, according to recommendations obtained from the manufacturer or material supplier. Components manufactured from PB compounds shall be conditioned in accordance with the manufacturer's recommendations prior to measurement of dimensions.

A.2 General characteristics: Colour

Colour shall be agreed upon between manufacturer and purchaser.

A.3 Geometrical characteristics

A.3.1 Dimensions of pipes

A.3.1.1 Diameters and related tolerances

The mean outside diameter, d_{em}, and the related tolerances shall conform to Table A.2, appropriate to the tolerance grade, whereby the average value of the measurements of the outside diameter made at a distance of d_n and $0{,}1d_n$ from the end of the test pieces shall be within the tolerance range for d_{em} specified in Table A.2.

© ISO 2015 – All rights reserved
Documents
Document Sharing Hub
Full document details: BS EN ISO 15494:2018+A1:2020

A.3.1.2 Out-of-roundness

The out-of-roundness for straight lengths shall conform to Table A.2 when measured at the point of manufacture. If other values for the out-of-roundness than those given in Table A.2 are necessary, they shall be agreed upon between manufacturer and purchaser.

For coiled pipes, the maximum out-of-roundness shall be specified by agreement between manufacturer and purchaser.

Table A.2 — Mean outside diameters, related tolerances and out-of-roundness of pipes

Dimensions in millimetres

Nominal outside diameter d_n	**Mean outside diameter** d_{em} min.	**Tolerance of outside diameter** Grade A[a]	**Out-of-roundness**[b] (straight pipes) Grade M[a] max.
12	12,0	+0,3	1,0
16	16,0	+0,3	1,0
20	20,0	+0,3	1,0
25	25,0	+0,3	1,0
32	32,0	+0,3	1,0
40	40,0	+0,4	1,0
50	50,0	+0,5	1,2
63	63,0	+0,6	1,5
75	75,0	+0,7	1,8
90	90,0	+0,9	2,2
110	110,0	+1,0	2,7
125	125,0	+1,2	3,0
140	140,0	+1,3	3,4
160	160,0	+1,5	3,9

[a] In accordance with ISO 11922-1.

[b] For straight pipes: Grade M ($0{,}024 d_n$).

Tolerances of the outside diameter are rounded up to the next 0,1 mm.

A.3.1.3 Wall thicknesses and related tolerances

The wall thickness, *e*, and the related tolerances shall conform to Table A.3.

Components intended to be welded shall have a minimum wall thickness of 1,9 mm.

Table A.3 — Wall thicknesses and related tolerances

Dimensions in millimetres

Nominal outside diameter	**Wall thickness, *e*, and related tolerances**[c]											
	Pipe series S and standard dimension ratio, SDR											
	S 10 SDR 21		S 8 SDR 17		S 6,3 SDR 13,6		S 5 SDR 11		S 4 SDR 9		S 3,2 SDR 7,4	
d_n	e_n	a	e_n	a	e_n	a	e_n	a	e_n	a	e_n	a
12	1,3[b]	+0,3	1,3[b]	+0,3	1,3[b]	+0,3	1,3[b]	+0,3	1,4	+0,3	1,7	+0,3

[a] Tolerance of the wall thickness: $0{,}1 e_n$ + 0,1 mm, rounded up to the next 0,1 mm.

[b] For d_n = 12, a non-preferred wall thickness of 1,1 mm may be chosen.

[c] All dimensions correspond to ISO 4065.

© ISO 2015 – All rights reserved

Documents
Document Sharing Hub
Full document details: BS EN ISO 15494:2018+A1:2020

Nominal outside diameter	Wall thickness, *e*, and related tolerances[c]											
	Pipe series S and standard dimension ratio, SDR											
	S 10 SDR 21		S 8 SDR 17		S 6,3 SDR 13,6		S 5 SDR 11		S 4 SDR 9		S 3,2 SDR 7,4	
d_n	e_n	a	e_n	a	e_n	a	e_n	a	e_n	a	e_n	a
16	1,3	+0,3	1,3	+0,3	1,3	+0,3	1,5	+0,3	1,8	+0,3	2,2	+0,4
20	1,3	+0,3	1,3	+0,3	1,5	+0,3	1,9	+0,3	2,3	+0,4	2,8	+0,4
25	1,3	+0,3	1,5	+0,3	1,9	+0,3	2,3	+0,4	2,8	+0,4	3,5	+0,5
32	1,6	+0,3	1,9	+0,3	2,4	+0,4	2,9	+0,4	3,6	+0,5	4,4	+0,6
40	1,9	+0,3	2,4	+0,4	3,0	+0,4	3,7	+0,5	4,5	+0,6	5,5	+0,7
50	2,4	+0,4	3,0	+0,4	3,7	+0,5	4,6	+0,6	5,6	+0,7	6,9	+0,8
63	3,0	+0,4	3,8	+0,5	4,7	+0,6	5,8	+0,7	7,1	+0,9	8,6	+1,0
75	3,6	+0,5	4,5	+0,6	5,6	+0,7	6,8	+0,8	8,4	+1,0	10,3	+1,2
90	4,3	+0,6	5,4	+0,7	6,7	+0,8	8,2	+1,0	10,1	+1,2	12,3	+1,4
110	5,3	+0,7	6,6	+0,8	8,1	+1,0	10,0	+1,1	12,3	+1,4	15,1	+1,7
125	6,0	+0,7	7,4	+0,9	9,2	+1,1	11,4	+1,3	14,0	+1,5	17,1	+1,9
140	6,7	+0,8	8,3	+1,0	10,3	+1,2	12,7	+1,4	15,7	+1,7	19,2	+2,1
160	7,7	+0,9	9,5	+1,1	11,8	+1,3	14,6	+1,6	17,9	+1,9	21,9	+2,3

a Tolerance of the wall thickness: $0{,}1e_n$ + 0,1 mm, rounded up to the next 0,1 mm.

b For d_n = 12, a non-preferred wall thickness of 1,1 mm may be chosen.

c All dimensions correspond to ISO 4065.

A.3.2 Dimensions of fittings

A.3.2.1 General

This Annex is applicable for the following types of fittings:

— socket fusion fittings;

— electrofusion fittings;

— flange adaptors and loose backing flanges;

— mechanical fittings.

A.3.2.2 Socket fusion fittings

A.3.2.2.1 Types of socket fusion fittings

Socket fusion fittings (see Figure A.2) shall be classified in the following two types.

— **Type A**: Fittings intended to be used with pipes having dimensions as given in A.3.1 where no external machining of the pipe is required.

— **Type B**: Fittings intended to be used with pipes having dimensions as given in A.3.1 where machining of the outside surface of the pipe is necessary in accordance with the instructions of the manufacturer.

A.3.2.2.2 Diameters and lengths of sockets

The nominal diameter(s), d_n, of a socket fusion fitting shall correspond to, and be designated by, the nominal outside diameter(s) of the pipe(s) for which it is designed.

© ISO 2015 – All rights reserved
Documents
Document Sharing Hub
Full document details: BS EN ISO 15494:2018+A1:2020

The diameters and lengths of sockets for socket fusion fittings of type A shall conform to Table A.4. For socket fusion fittings of type B, the diameters and lengths of sockets shall conform to Table A.5.

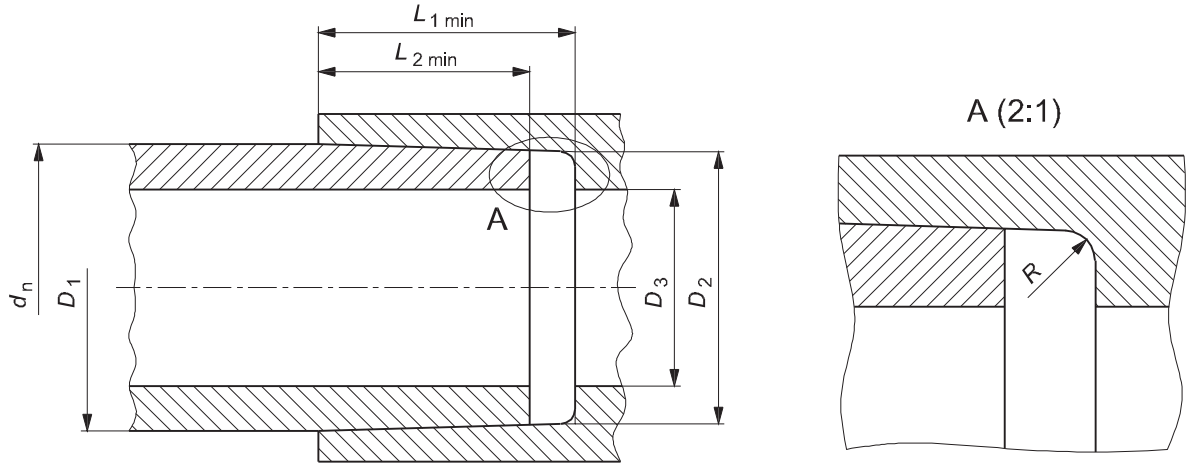

Key

D_1 inside diameter of the socket mouth which comprises the mean diameter of the circle at the inner section of the extension of the socket with the plane of the socket mouth

D_2 mean inside diameter of the socket root which comprises the mean diameter of the circle in a plane parallel to the plane of the socket mouth and separated from it by a distance of L_{1min}

D_3 minimum diameter of the flow channel (bore) through the body of a fitting

L_{1min} minimum socket length which comprises the distance from the socket mouth to the shoulder

L_{2min} minimum insertion length which comprises the depth of the penetration of the heated pipe end into the socket

R minimum radius at socket root

Figure A.2 — Diameters and lengths of socket fusion fittings

Table A.4 — Diameters and lengths of sockets for socket fusion fittings of type A

Dimensions in millimetres

Nominal outside diameter of pipe	Mean outside diameter of pipe	Mean inside diameter				Out-of-round-ness	Bore	Radius at socket root	Socket length	Penetration of pipe into socket
		Socket mouth		Socket root						
d_n	d_{em}	D_1		D_2			D_3[a]	R	L_1[b]	L_2[c]
	min.	min.		min.		max.	min.	max.	min.	min.
16	16,0	15,2	+0,3	15,1	+0,3	0,4	9,0	2,5	13,0	9,5
20	20,0	19,2	+0,3	19,0	+0,3	0,4	13,0	2,5	14,5	11,0
25	25,0	24,2	+0,3	23,9	+0,4	0,4	18,0	2,5	16,0	12,5
32	32,0	31,1	+0,4	30,9	+0,4	0,5	25,0	3,0	18,0	14,5
40	40,0	39,0	+0,4	38,8	+0,4	0,5	31,0	3,0	20,5	17,0
50	50,0	48,9	+0,5	48,7	+0,5	0,6	39,0	3,0	23,5	20,0
63	63,0	61,9	+0,6	61,6	+0,5	0,6	49,0	4,0	27,5	24,0
75	75,0	74,3	+0,6	73,1	+0,6	1,0	59,0	4,0	30,0	26,0
90	90,0	89,3	+0,6	87,9	+0,6	1,0	69,0	4,0	33,0	29,0
110	110,0	109,4	+0,6	107,7	+0,6	1,0	85,0	4,0	37,0	32,5

[a] Only applicable, if a shoulder exists.

[b] Length of the socket (rounded), d16 to d63: $L_{1min} = 0{,}3d_n + 8{,}5$ mm; d75 to 110: $L_{1min} = 0{,}2d_n + 15$ mm

[c] Penetration of pipe into socket, d16 to d63; $L_{2min} = L_{1min} - 3{,}5$ mm; d75 to d110; No formula available

© ISO 2015 – All rights reserved

Documents
Document Sharing Hub
Full document details: BS EN ISO 15494:2018+A1:2020

Table A.5 — Diameters and lengths of sockets for socket fusion fittings of type B

Dimensions in millimetres

Nominal outside diameter of pipe	Mean outside diameter of pipe		Mean inside diameter				Out-of-roundness	Bore	Radius at socket root	Socket length	Penetration of pipe into socket
			Socket mouth		Socket root						
d_n	d_{em}		D_1		D_2			D_3[a]	R	L_1[b]	L_2[c]
	min.	max.	min.		min.		max.	min.	max.	min.	min.
16	15,8	16,0	15,2	+0,3	15,1	+0,3	0,4	11,0	2,5	13,0	9,5
20	19,8	20,0	19,2	+0,3	19,0	+0,3	0,4	13,0	2,5	14,5	11,0
25	24,8	25,0	24,2	+0,3	23,9	+0,4	0,4	18,0	2,5	16,0	12,5
32	31,8	32,0	31,1	+0,4	30,9	+0,4	0,5	25,0	3,0	18,0	14,5
40	39,8	40,0	39,0	+0,4	38,8	+0,4	0,5	31,0	3,0	20,5	17,0
50	49,8	50,0	48,9	+0,5	48,7	+0,5	0,6	39,0	3,0	23,5	20,0
63	62,7	63,0	61,9	+0,6	61,6	+0,5	0,6	49,0	4,0	27,5	24,0
75	74,7	75,0	73,7	+0,5	73,4	+0,5	1,0	58,0	4,0	31,0	27,5
90	89,7	90,0	88,6	+0,6	88,2	+0,6	1,0	69,0	4,0	35,5	32,0
110	109,6	110,0	108,4	+0,6	108,0	+0,6	1,0	85,0	4,0	41,5	38,0

a Only applicable if a shoulder exists.

b Length of the socket (rounded), $L_{1min} = 0{,}3d_n + 8{,}5$ min.

c Penetration of pipe into socket, $L_{2min} = L_{1min} - 3{,}5$ mm.

A.3.2.2.3 Other dimensions

Other dimensions of socket fusion fittings shall be specified by the manufacturer.

A.3.2.3 Electrofusion fittings

A.3.2.3.1 Dimensions of sockets of electrofusion fittings

The dimensions of sockets of electrofusion fittings (see Figure A.3) shall conform to Table A.6.

In the case of a fitting having sockets of different sizes (e.g. reduction), each socket shall conform to the requirements of the corresponding nominal diameter.

In case of using spigot end fittings, the outside tubular length of the fusion end shall allow the assembly with an electrofusion fitting.

© ISO 2015 – All rights reserved
Documents
Document Sharing Hub
Full document details: BS EN ISO 15494:2018+A1:2020

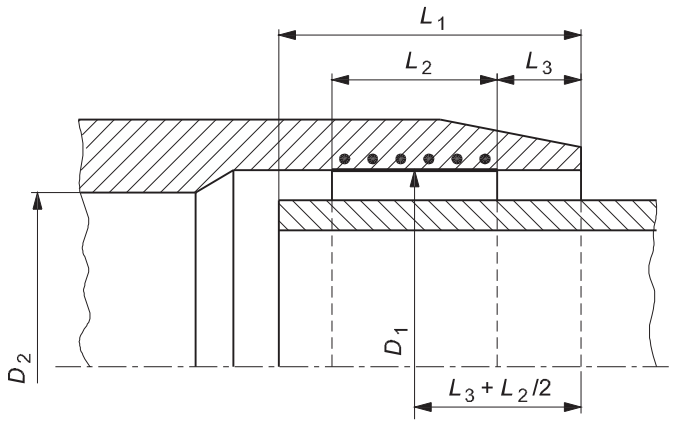

Key

D_1 mean inside diameter in the fusion zone measured in a plane parallel to the plane of the mouth at a distance of $L_3 + 0{,}5L_2$ from that face

D_2 bore, which is the minimum diameter of the flow channel through the body of the fitting

L_1 depth of penetration of the pipe or male end of a spigot end fitting; in case of a coupling without stop, it is not greater than half the total length of the fitting

L_2 heated length within a socket as declared by the manufacturer, to be the nominal length of the fusion zone

L_3 distance between the mouth of the fitting and the start of the fusion zone as declared by the manufacturer to be the nominal unheated entrance length of the fitting ($L_3 \geq 5$ mm)

Figure A.3 — Dimensions of sockets of electrofusion fittings

Table A.6 — Dimensions of sockets of electrofusion fittings

Dimensions in millimetres

Nominal diameter of fitting d_n	**Depth of penetration**[a] L_1		**Length of the fusion zone** L_2
	min.	max.	min.
16	20	35	10
20	20	37	10
25	20	40	10
32	20	44	10
40	20	49	10
50	20	55	10
63	23	63	11
75	25	70	12
90	28	79	13
110	32	85	15
125	35	90	16
140	38	95	18
160	42	101	20

[a] The manufacturer shall declare the actual maximum and minimum values of D_1 and L_1 to determine suitability for clamping and joint assembly.

The mean inside diameter of the fitting in the middle of the fusion zone (see D_1 in Figure A.3) shall be not less than d_n.

© ISO 2015 – All rights reserved

Documents
Document Sharing Hub
Full document details: BS EN ISO 15494:2018+A1:2020