BS EN ISO 15653:2010

BSI Standards Publication

# Metallic materials — Method of test for the determination of quasistatic fracture toughness of welds

bsi.

...making excellence a habit.™

Document Sharing Hub

**National foreword**

This British Standard is the UK implementation of EN ISO 15653:2010. It supersedes BS 7448-2:1997 which is withdrawn.

The UK participation in its preparation was entrusted by Technical Committee ISE/101, Test methods for metals, to Subcommittee ISE/101/4, Toughness testing.

A list of organizations represented on this committee can be obtained on request to its secretary.

This publication does not purport to include all the necessary provisions of a contract. Users are responsible for its correct application.

© BSI 2010

ISBN 978 0 580 71613 3

ICS 25.160.40

**Compliance with a British Standard cannot confer immunity from legal obligations.**

This British Standard was published under the authority of the Standards Policy and Strategy Committee on 31 July 2010.

**Amendments and Corrigenda issued since publication**

| Date | Text affected |
|---|---|

Documents
Document Sharing Hub

Full document details: BS EN ISO 15653:2010

EUROPEAN STANDARD

NORME EUROPÉENNE

EUROPÄISCHE NORM

# EN ISO 15653

April 2010

ICS 25.160.40

English Version

## Metallic materials - Method of test for the determination of quasistatic fracture toughness of welds (ISO 15653:2010)

Matériaux métalliques - Méthode d'essai pour la détermination de la ténacité quasi statique à la rupture des soudures (ISO 15653:2010)

Metallische Werkstoffe - Prüfverfahren zur Bestimmung der quasistatischen Bruchzähigkeit von Schweißverbindungen (ISO 15653:2010)

This European Standard was approved by CEN on 23 January 2010.

CEN members are bound to comply with the CEN/CENELEC Internal Regulations which stipulate the conditions for giving this European Standard the status of a national standard without any alteration. Up-to-date lists and bibliographical references concerning such national standards may be obtained on application to the CEN Management Centre or to any CEN member.

This European Standard exists in three official versions (English, French, German). A version in any other language made by translation under the responsibility of a CEN member into its own language and notified to the CEN Management Centre has the same status as the official versions.

CEN members are the national standards bodies of Austria, Belgium, Bulgaria, Croatia, Cyprus, Czech Republic, Denmark, Estonia, Finland, France, Germany, Greece, Hungary, Iceland, Ireland, Italy, Latvia, Lithuania, Luxembourg, Malta, Netherlands, Norway, Poland, Portugal, Romania, Slovakia, Slovenia, Spain, Sweden, Switzerland and United Kingdom.

EUROPEAN COMMITTEE FOR STANDARDIZATION
COMITÉ EUROPÉEN DE NORMALISATION
EUROPÄISCHES KOMITEE FÜR NORMUNG

**Management Centre: Avenue Marnix 17, B-1000 Brussels**

© 2010 CEN All rights of exploitation in any form and by any means reserved worldwide for CEN national Members.

Ref. No. EN ISO 15653:2010: E

Documents
Document Sharing Hub

Full document details: BS EN ISO 15653:2010

# Foreword

This document (EN ISO 15653:2010) has been prepared by Technical Committee ISO/TC 164 "Mechanical testing of metals" in collaboration with Technical Committee CEN/TC 121 “Welding” the secretariat of which is held by DIN.

This European Standard shall be given the status of a national standard, either by publication of an identical text or by endorsement, at the latest by October 2010, and conflicting national standards shall be withdrawn at the latest by October 2010.

Attention is drawn to the possibility that some of the elements of this document may be the subject of patent rights. CEN [and/or CENELEC] shall not be held responsible for identifying any or all such patent rights.

According to the CEN/CENELEC Internal Regulations, the national standards organizations of the following countries are bound to implement this European Standard: Austria, Belgium, Bulgaria, Croatia, Cyprus, Czech Republic, Denmark, Estonia, Finland, France, Germany, Greece, Hungary, Iceland, Ireland, Italy, Latvia, Lithuania, Luxembourg, Malta, Netherlands, Norway, Poland, Portugal, Romania, Slovakia, Slovenia, Spain, Sweden, Switzerland and the United Kingdom.

**Endorsement notice**

The text of ISO 15653:2010 has been approved by CEN as a EN ISO 15653:2010 without any modification.

Documents
Document Sharing Hub



Full document details: BS EN ISO 15653:2010

# INTERNATIONAL STANDARD

# ISO 15653

First edition
2010-04-15

## Metallic materials — Method of test for the determination of quasistatic fracture toughness of welds

*Matériaux métalliques — Méthode d'essai pour la détermination de la ténacité quasi statique à la rupture des soudures*

Reference number
ISO 15653:2010(E)

Documents
Document Sharing Hub
© ISO 2010

Full document details: BS EN ISO 15653:2010

**PDF disclaimer**

This PDF file may contain embedded typefaces. In accordance with Adobe's licensing policy, this file may be printed or viewed but shall not be edited unless the typefaces which are embedded are licensed to and installed on the computer performing the editing. In downloading this file, parties accept therein the responsibility of not infringing Adobe's licensing policy. The ISO Central Secretariat accepts no liability in this area.

Adobe is a trademark of Adobe Systems Incorporated.

Details of the software products used to create this PDF file can be found in the General Info relative to the file; the PDF-creation parameters were optimized for printing. Every care has been taken to ensure that the file is suitable for use by ISO member bodies. In the unlikely event that a problem relating to it is found, please inform the Central Secretariat at the address given below.

**COPYRIGHT PROTECTED DOCUMENT**

© ISO 2010

All rights reserved. Unless otherwise specified, no part of this publication may be reproduced or utilized in any form or by any means, electronic or mechanical, including photocopying and microfilm, without permission in writing from either ISO at the address below or ISO's member body in the country of the requester.

ISO copyright office
Case postale 56 • CH-1211 Geneva 20
Tel. + 41 22 749 01 11
Fax + 41 22 749 09 47
E-mail copyright@iso.org
Web www.iso.org

Published in Switzerland



© ISO 2010 – All rights reserved

Documents
Document Sharing Hub

Full document details: BS EN ISO 15653:2010

# Contents

Page

Foreword ..... iv
1 Scope ..... 1
2 Normative references ..... 1
3 Terms and definitions ..... 1
4 Symbols and units ..... 3
5 Principle ..... 3
6 Choice of specimen design, specimen orientation and notch location ..... 4
6.1 Classification of target area for notching ..... 4
6.2 Specimen design ..... 4
6.3 Specimen and crack plane orientation ..... 4
7 Pre-machining metallography ..... 8
7.1 Microstructural assessment of macrosections ..... 8
7.2 Additional requirements for heat-affected zone tests ..... 9
8 Machining ..... 9
8.1 Tolerances on specimen dimensions ..... 9
8.2 Notch placement for through-thickness notched specimens ..... 10
8.3 Notch placement for surface-notched specimens ..... 10
8.4 Notch machining ..... 10
9 Specimen preparation ..... 15
9.1 Fatigue precracking ..... 15
9.2 Side grooving ..... 15
10 Test apparatus, requirements and test procedure ..... 15
11 Post-test metallography ..... 15
11.1 General ..... 15
11.2 Through-thickness notched specimens ..... 16
11.3 Surface-notched specimens ..... 16
11.4 Assessment of pop-in ..... 16
12 Post-test analysis ..... 19
12.1 Choice of tensile properties ..... 19
12.2 $K_{Ic}$ ..... 20
12.3 $\delta$ and $J$ ..... 20
12.4 Qualification requirements ..... 20
13 Test report ..... 24
Annex A (informative) Examples of notch locations ..... 25
Annex B (informative) Examples of pre-test and post-test metallography ..... 27
Annex C (normative) Residual-stress modification and precracking technique ..... 29
Annex D (normative) Assessment of pop-in ..... 31
Annex E (informative) Shallow-notched specimen testing ..... 37
Bibliography ..... 41

© ISO 2010 – All rights reserved


Documents
Document Sharing Hub
Full document details: BS EN ISO 15653:2010

## Foreword

ISO (the International Organization for Standardization) is a worldwide federation of national standards bodies (ISO member bodies). The work of preparing International Standards is normally carried out through ISO technical committees. Each member body interested in a subject for which a technical committee has been established has the right to be represented on that committee. International organizations, governmental and non-governmental, in liaison with ISO, also take part in the work. ISO collaborates closely with the International Electrotechnical Commission (IEC) on all matters of electrotechnical standardization.

International Standards are drafted in accordance with the rules given in the ISO/IEC Directives, Part 2.

The main task of technical committees is to prepare International Standards. Draft International Standards adopted by the technical committees are circulated to the member bodies for voting. Publication as an International Standard requires approval by at least 75 % of the member bodies casting a vote.

Attention is drawn to the possibility that some of the elements of this document may be the subject of patent rights. ISO shall not be held responsible for identifying any or all such patent rights.

ISO 15653 was prepared by Technical Committee ISO/TC 164, *Mechanical testing of metals*, Subcommittee SC 4, *Toughness testing — Fracture (F), Pendulum (P), Tear (T).*


© ISO 2010 – All rights reserved
Documents
Document Sharing Hub
Full document details: BS EN ISO 15653:2010

# Metallic materials — Method of test for the determination of quasistatic fracture toughness of welds

## 1 Scope

This International Standard specifies methods for determining fracture toughness in terms of $K$ (stress intensity factor), $\delta$ (crack tip opening displacement, CTOD) and $J$ (experimental equivalent of the $J$-integral) for welds in metallic materials.

This International Standard is complementary to ISO 12135, which covers all aspects of fracture toughness testing of parent metal and which needs to be used in conjunction with this document. This International Standard describes methods for determining point values of fracture toughness. It should not be considered a way of obtaining a valid $R$-curve (resistance-to-crack-extension curve). However, the specimen preparation methods described in this International Standard could be usefully employed when determining $R$-curves for welds. The methods use fatigue precracked specimens which have been notched, after welding, in a specific target area in the weld. Methods are described to evaluate the suitability of a weld for notch placement within the target area, which is either within the weld metal or within the weld heat-affected zone (HAZ), and then, where appropriate, to evaluate the effectiveness of the fatigue crack in sampling these areas.

## 2 Normative references

The following referenced documents are indispensable for the application of this document. For dated references, only the edition cited applies. For undated references, the latest edition of the referenced document (including any amendments) applies.

ISO 3785, *Metallic materials — Designation of test specimen axes in relation to product texture*

ISO 12135, *Metallic materials — Unified method of test for the determination of quasistatic fracture toughness*

## 3 Terms and definitions

For the purposes of this document, the terms and definitions given in ISO 12135 and the following apply.

**3.1**
**stretch zone width**
**SZW**
increase in crack length associated with crack tip blunting — i.e. prior to the onset of unstable crack extension, pop-in (see 3.3) or slow stable crack extension — and occurring in the same plane as the fatigue precrack

**3.2**
**target area**
intended fatigue crack tip position within the weld metal or HAZ

NOTE See 3.7 and 3.9.

© ISO 2010 – All rights reserved

Documents
Document Sharing Hub
Full document details: BS EN ISO 15653:2010

**3.3**
**pop-in**
an abrupt discontinuity in the force versus displacement record, featured as a sudden increase in displacement and, generally, a sudden decrease in force, subsequent to which displacement and force increase to above their values at pop-in

**3.4**
**local compression**
controlled compression applied to specimens in the thickness direction on the unnotched ligament prior to fatigue cracking using hardened steel platens

NOTE See Annex C.

**3.5**
**welding**
an operation in which two or more parts are united by means of heat, friction, pressure or all three of these, in such a way that there is continuity in the nature of the metal between these parts

NOTE Filler metal, the melting temperature of which is of the same order as that of the parent metal, may or may not be used.

**3.6**
**weld**
union of pieces of metal made by welding

**3.7**
**weld metal**
all metal melted during the making of a weld and retained in the weld

**3.8**
**parent metal**
**base metal**
metal to be joined by welding

**3.9**
**heat-affected zone**
**HAZ**
zone in the parent metal that is metallurgically affected by the heat of welding

**3.10**
**fusion line**
**FL**
junction between the weld metal and the parent metal heat-affected zone

**3.11**
**weld positional**
**WP**
target position for the fatigue crack tip, defined with respect to a reference line

NOTE See Figure A.1 for examples.

**3.12**
**specific microstructure**
**SM**
target microstructure for the fatigue crack tip

NOTE See Figure A.2 for examples.


© ISO 2010 – All rights reserved
Documents
Document Sharing Hub
Full document details: BS EN ISO 15653:2010

**3.13**
**specimen blank**
specimen prepared from weld metal plus parent metal prior to notching

**3.14**
**postweld heat treatment**
heat treatment applied after welding for the purpose of reducing residual stresses or modifying weld properties

## 4 Symbols and units

For the purposes of this document, the symbols and units given in Table 1 apply in addition to those in ISO 12135.

**Table 1 — Symbols and units**

| Symbol | Unit | Designation |
|---|---|---|
| $d_1$, $d_2$ | mm | Lengths of microstructural features associated with pop-in. |
| $h$ | mm | Effective weld width, defined as shortest distance between fatigue crack tip and weld fusion line within the central 75 % of the thickness (see Figures 13 and 14). |
| HV10 | | Vickers hardness using 10 kg force. |
| N | | Normal to welding direction. |
| P | | Parallel to welding direction. |
| Q | | Weld thickness direction. |
| $R_{p0,2b}$ | MPa | 0,2 % offset yield strength of parent metal at the temperature of the fracture test. |
| $R_{p0,2w}$ | MPa | 0,2 % offset yield strength of weld metal at the temperature of the fracture test. |
| $R_{mb}$ | MPa | Tensile strength of parent metal at the temperature of the fracture test. |
| $R_{mw}$ | MPa | Tensile strength of weld metal at the temperature of the fracture test. |
| $s_1$ | mm | Distance between crack tip and target area measured in the crack plane (see Figure 12). |
| $s_2$ | mm | Distance between crack tip and target area measured perpendicular to the crack plane (see Figure 12). |
| $V$, $V_1$, $V_2$ | mm | Crack mouth opening displacement. |
| X | | Direction parallel to primary grain flow of parent metal. |
| Y | | Direction transverse to primary grain flow and to thickness of parent metal. |
| Z | | Direction through thickness of parent metal. |
| $\Delta a_{pop}$ | mm | Maximum length of brittle crack extension (beyond SZW) (see 3.1) associated with pop-in. |
| $\lambda$ | mm | Length of specific microstructure measured in pre-test or post-test metallography (see Figure B.2). |

## 5 Principle

This International Standard specifies procedures for the determination of fracture toughness on notched-plus-fatigue-cracked specimens taken from welds. It pertains to situations where the crack tip is

a) located in relation to a weld feature of interest, referred to as “weld positional” (WP);

b) specifically located within a microstructure of interest, referred to as “specific microstructure” (SM).

Metallographic examination of the weld is used to confirm that the target weld feature and/or microstructure is indeed present at the crack tip and in sufficient quantity for testing.

© ISO 2010 – All rights reserved

Documents
Document Sharing Hub
Full document details: BS EN ISO 15653:2010

Specimen geometry and notch orientation are chosen, and a fatigue crack then extended from the specimen's notch tip into the target weld feature or microstructure by applying a controlled alternating force to the specimen. The purpose of the test is to determine weld fracture toughness in the absence of significant welding stresses. To achieve this and to produce a straight-fronted fatigue crack, modifications to the fatigue precracking procedure may be required. These modifications are usually necessary when testing as-welded or partially stress-relieved welds.

The fracture toughness test is performed and evaluated in accordance with ISO 12135, but subject to additional requirements of this test method regarding post-test analysis (see 12.1, 12.2 and 12.3) and qualification (see 12.4).

Post-test metallography is often required to make certain that the crack tip was located in the target weld feature and/or microstructure and to determine the significance of pop-ins.

The sequence of operations is summarized in Figure 1.

## 6 Choice of specimen design, specimen orientation and notch location

### 6.1 Classification of target area for notching

A specimen selected for weld positional (WP) testing is intended to test a defined weld region with respect to a reference position (e.g. the weld metal centreline).

A specimen selected for specific microstructure (SM) testing is intended to sample a specific microstructure along the whole or part of the crack front length within the central 75 % of the specimen thickness.

NOTE Some examples of WP and SM notch locations are given in Annex A.

WP weld metal centreline notch locations sampling predominantly grain-refined regions may give misleading (overly high) values of fracture toughness for misaligned two-pass and parallel multi-pass welds. For these welds, it is recommended that the SM notch locations shown in Figures A.2 iv) and A.2 v), respectively, be used.

### 6.2 Specimen design

Specimen design shall be of compact or single-edge-notched bend configuration as defined in ISO 12135 and may be plain-sided or side-grooved. Bend specimens notched into the plate thickness (see Figures 2, 3 and 4, parent metal specimens XY and YX and weld metal specimens NP and PN) are referred to as through-thickness notched specimens, whilst those notched into the planar surface of the plate (see Figures 2, 3 and 4, parent metal specimens XZ and YZ and weld metal specimens NQ and PQ) are referred to as surface-notched specimens.

NOTE Tolerances on weld specimen dimensions are less stringent than those for testing parent metal (see 8.1).

Test specimens shall have the dimension $B$ or $W$ (see Figure 5) equal to the full thickness of the parent metal adjacent to the weld to be tested (excluding weld overfill).

Testing of sub-sized (i.e. $B$ or $W <$ full thickness in directions Q for weld and Z for parent metal in Figures 2, 3 and 4) and/or side-grooved specimens is permitted, but shall be properly identified as such in the test report. Results from sub-sized and/or side-grooved specimens may differ from those from full-thickness specimens owing to size effects and/or different microstructural regions being tested.

### 6.3 Specimen and crack plane orientation

Specimen and crack plane orientation relative to the weld and parent metal working directions shall be defined using the identification system described in Figures 2, 3 and 4.


© ISO 2010 – All rights reserved
Documents
Document Sharing Hub
Full document details: BS EN ISO 15653:2010

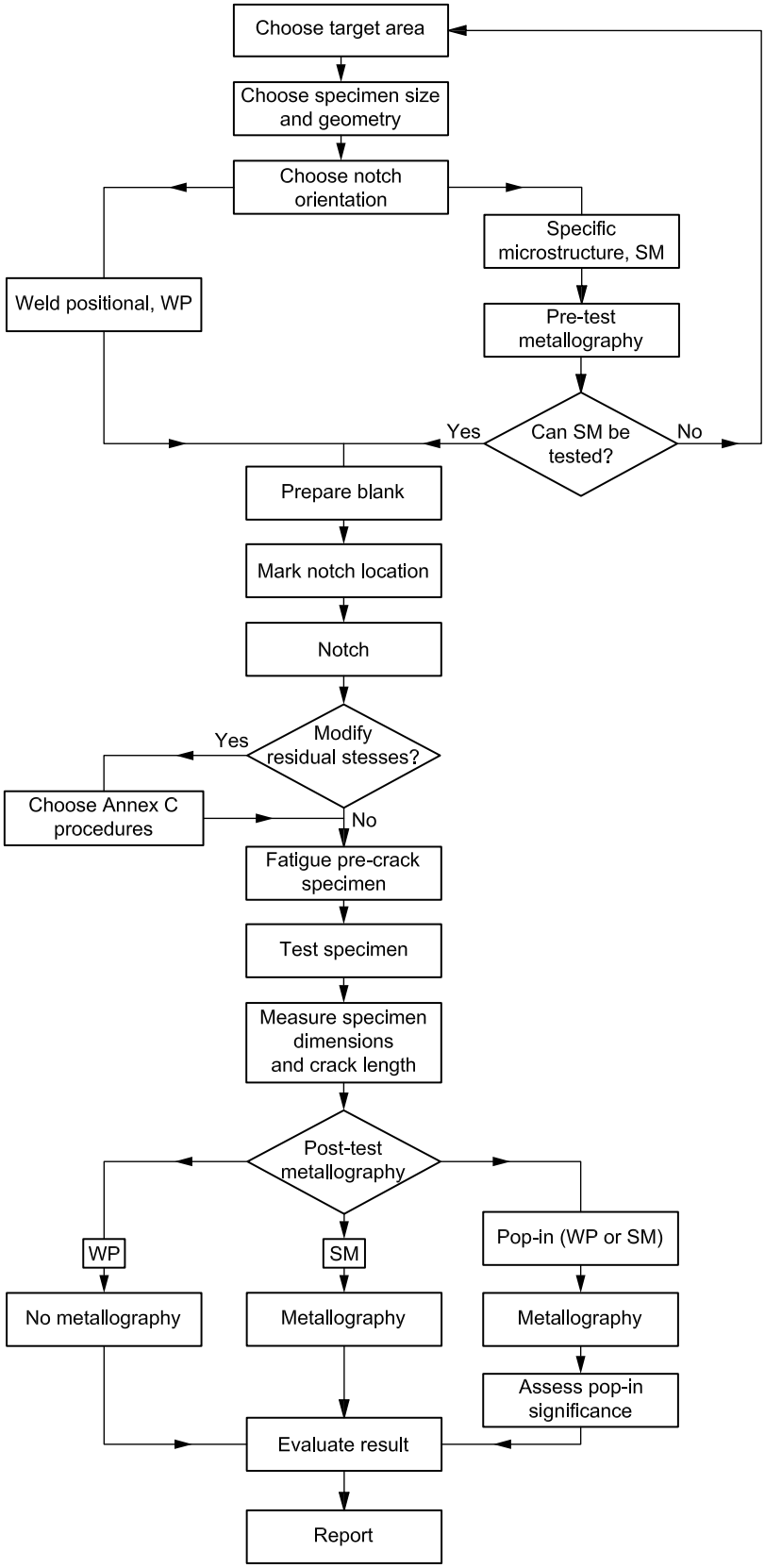


**Figure 1 — Flow chart for testing**

© ISO 2010 – All rights reserved

Documents
Document Sharing Hub
Full document details: BS EN ISO 15653:2010

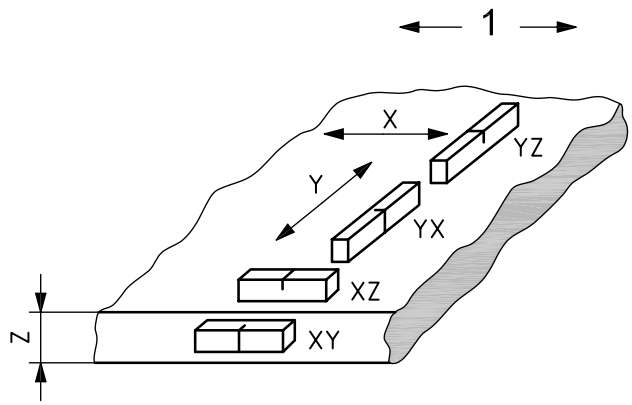


**a) Parent metal**

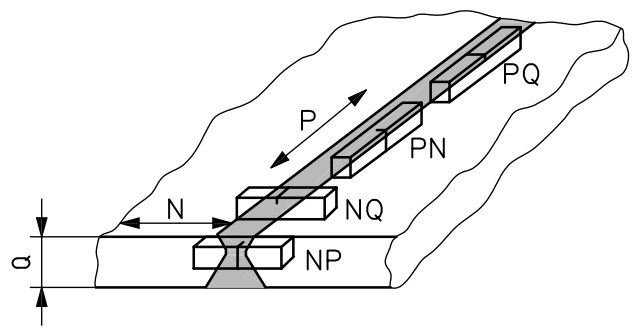


**b) Weld metal**

**Key**

1 rolling direction

N = normal to weld direction

P = parallel to weld direction

Q = weld thickness direction

First letter in designation: the direction normal to the crack plane.

Second letter in designation: the expected direction of crack propagation.

See ISO 3785 for the definitions of X, Y and Z.

Specimen orientations NP and PN shall be referred to as through-thickness notched, whilst specimen orientations NQ and PQ shall be referred to as surface-notched.

**Figure 2 — Crack plane orientation code for fracture toughness specimens of parent metal and weld metal**



© ISO 2010 – All rights reserved

Documents
Document Sharing Hub

Full document details: BS EN ISO 15653:2010

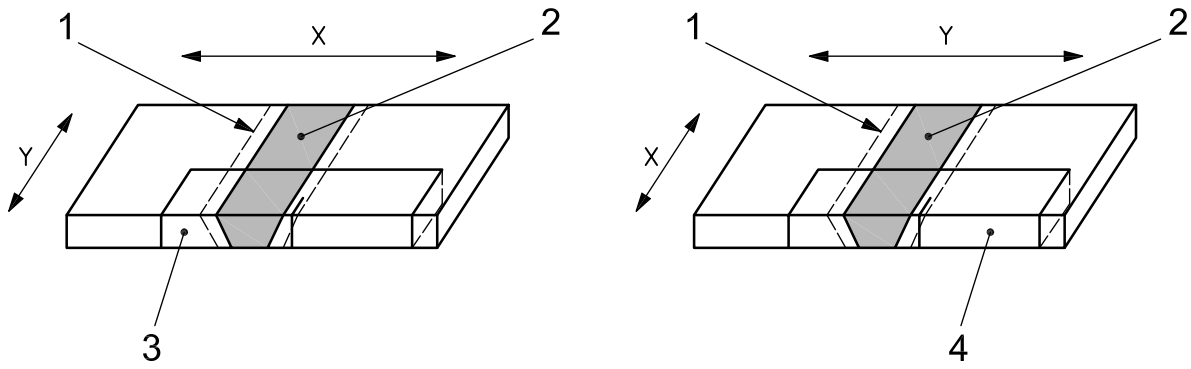


**a) Typical butt weld**

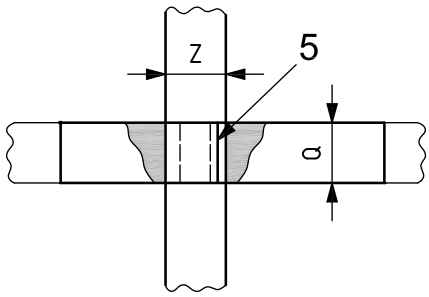


**b) Cruciform joint**

**Key**

1 HAZ
2 weld
3 weld specimen orientation NP/XY
4 weld specimen orientation NP/YX
5 through-crack NP/ZX or NP/ZY

X = rolling direction
Q = weld thickness direction

For tests of the HAZ, where the rolling direction of the parent metal may affect resistance to crack extension, the weld and parent metal orientations may be combined to give both the weld direction and the parent metal rolling direction as shown in this figure and Figure 4.

**Figure 3 — Crack plane orientation code for fracture toughness specimens for testing the HAZ of a typical butt weld and cruciform joint**

© ISO 2010 – All rights reserved

Documents
Document Sharing Hub
Full document details: BS EN ISO 15653:2010

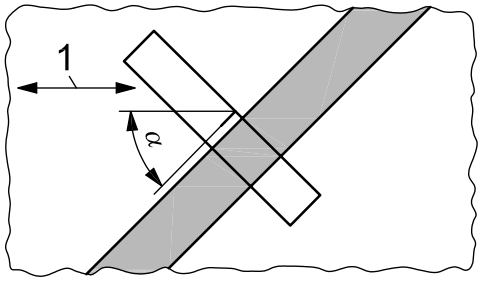


NP/Xα

**a) Typical butt weld**

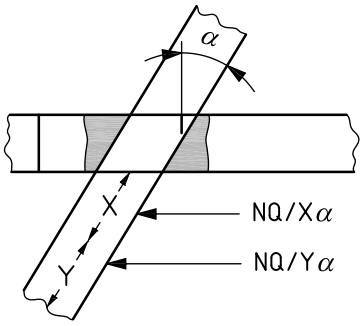


**b) Angled cruciform joint**

**Key**

1 rolling direction

For tests of the HAZ, where the rolling direction of the parent metal may affect resistance to crack extension, the weld and parent metal orientations may be combined to give both the weld direction and the parent metal rolling direction as shown in this figure and Figure 3.

**Figure 4 — Crack plane orientation code for fracture toughness specimens for testing the HAZ at an angle, $\alpha$, to the parent metal rolling direction for a typical butt weld and angled cruciform joint**

## 7 Pre-machining metallography

### 7.1 Microstructural assessment of macrosections

When the notch target area is defined as SM, either separate macrosections or the ends of the welds shall be prepared with the plane of the section perpendicular to the welding direction. These transverse weld sections shall bound the length of weld to be tested to ensure that the target microstructure is present at the expected crack tip position and in sufficient quantity for testing. The macrosections shall be polished, etched and examined at a magnification suitable to identify the target area prior to specimen manufacture. Where separate macrosections are prepared, their positions along the weld shall be recorded.

Examination of the macrosections shall be used to establish that

a) in a through-thickness notched specimen, the intended crack tip is likely to reside in the target area within the central 75 % of the thickness;

b) in a surface-notched specimen, the intended crack tip is no more than 0,5 mm from the target area.


© ISO 2010 – All rights reserved
Documents
Document Sharing Hub
Full document details: BS EN ISO 15653:2010