BS EN ISO 16092-2:2020

BSI Standards Publication

Machine tools safety — Presses

Part 2: Safety requirement for mechanical presses

Documents
Document Sharing Hub

Full document details: BS EN ISO 16092-2:2020

National foreword

This British Standard is the UK implementation of EN ISO 16092-2:2020. It supersedes BS EN 692:2005+A1:2009, which is withdrawn.

The UK participation in its preparation was entrusted to Technical Committee MTE/1/1, Machine tools - Safety.

A list of organizations represented on this committee can be obtained on request to its committee manager.

This publication does not purport to include all the necessary provisions of a contract. Users are responsible for its correct application.

© The British Standards Institution 2020
Published by BSI Standards Limited 2020

ISBN 978 0 580 95612 6

ICS 25.120.10; 25.080.01

Compliance with a British Standard cannot confer immunity from legal obligations.

This British Standard was published under the authority of the Standards Policy and Strategy Committee on 30 September 2020.

Amendments/corrigenda issued since publication

Date	Text affected

Documents
Document Sharing Hub

Full document details: BS EN ISO 16092-2:2020

EUROPEAN STANDARD

NORME EUROPÉENNE

EUROPÄISCHE NORM

EN ISO 16092-2

September 2020

ICS 25.080.01

Supersedes EN 692:2005+A1:2009

English Version

Machine tools safety - Presses - Part 2: Safety requirement for mechanical presses (ISO 16092-2:2019)

Sécurité des machines-outils - Presses - Partie 2 : Exigences de sécurité pour les presses mécaniques (ISO 16092-2:2019)

Werkzeugmaschinen - Sicherheit von Pressen - Teil 2: Mechanische Pressen (ISO 16092-2:2019)

This European Standard was approved by CEN on 29 July 2020.

CEN members are bound to comply with the CEN/CENELEC Internal Regulations which stipulate the conditions for giving this European Standard the status of a national standard without any alteration. Up-to-date lists and bibliographical references concerning such national standards may be obtained on application to the CEN-CENELEC Management Centre or to any CEN member.

This European Standard exists in three official versions (English, French, German). A version in any other language made by translation under the responsibility of a CEN member into its own language and notified to the CEN-CENELEC Management Centre has the same status as the official versions.

CEN members are the national standards bodies of Austria, Belgium, Bulgaria, Croatia, Cyprus, Czech Republic, Denmark, Estonia, Finland, France, Germany, Greece, Hungary, Iceland, Ireland, Italy, Latvia, Lithuania, Luxembourg, Malta, Netherlands, Norway, Poland, Portugal, Republic of North Macedonia, Romania, Serbia, Slovakia, Slovenia, Spain, Sweden, Switzerland, Turkey and United Kingdom.

EUROPEAN COMMITTEE FOR STANDARDIZATION
COMITÉ EUROPÉEN DE NORMALISATION
EUROPÄISCHES KOMITEE FÜR NORMUNG

CEN-CENELEC Management Centre: Rue de la Science 23, B-1040 Brussels

© 2020 CEN All rights of exploitation in any form and by any means reserved worldwide for CEN national Members.

Ref. No. EN ISO 16092-2:2020 E

Documents
Document Sharing Hub

Full document details: BS EN ISO 16092-2:2020

European foreword

This document (EN ISO 16092-2:2020) has been prepared by Technical Committee ISO/TC 39 "Machine tools" in collaboration with Technical Committee CEN/TC 143 “Machine tools - Safety” the secretariat of which is held by SNV.

This European Standard shall be given the status of a national standard, either by publication of an identical text or by endorsement, at the latest by March 2021, and conflicting national standards shall be withdrawn at the latest by March 2021.

Attention is drawn to the possibility that some of the elements of this document may be the subject of patent rights. CEN shall not be held responsible for identifying any or all such patent rights.

This document supersedes EN 692:2005+A1:2009.

This document has been prepared under a mandate given to CEN by the European Commission and the European Free Trade Association, and supports essential requirements of EU Directive(s).

For the relationship with EU Directive(s) see informative Annex ZA, which is an integral part of this document.

According to the CEN-CENELEC Internal Regulations, the national standards organizations of the following countries are bound to implement this European Standard: Austria, Belgium, Bulgaria, Croatia, Cyprus, Czech Republic, Denmark, Estonia, Finland, France, Germany, Greece, Hungary, Iceland, Ireland, Italy, Latvia, Lithuania, Luxembourg, Malta, Netherlands, Norway, Poland, Portugal, Republic of North Macedonia, Romania, Serbia, Slovakia, Slovenia, Spain, Sweden, Switzerland, Turkey and the United Kingdom.

Endorsement notice

The text of ISO 16092-2:2019 has been approved by CEN as EN ISO 16092-2:2020 without any modification.

Documents
Document Sharing Hub

Full document details: BS EN ISO 16092-2:2020

Annex ZA
(informative)

Relationship between this European Standard and the essential requirements of EU Directive 2006/42/EC aimed to be covered

This European Standard has been prepared under a Commission's standardization request "M/396 Mandate to CEN and CENELEC for Standardisation in the field of machinery " to provide one voluntary means of conforming to essential requirements of Directive 2006/42/EC of the European Parliament and of the Council of 17 May 2006 on machinery, and amending Directive 95/16/EC (recast).

Once this standard is cited in the Official Journal of the European Union under that Directive, compliance with the normative clauses of this standard given in Table ZA.1 confers, within the limits of the scope of this standard, a presumption of conformity with the corresponding essential requirements of that Directive, and associated EFTA regulations.

Table ZA.1 — Correspondence between this European Standard and Annex I of Directive 2006/42/EC

The relevant Essential Requirements of Directive 2006/42/EC	Clause(s)/sub-clause(s) of this EN	Remarks/Notes
1.1.2 Principles of safety integration	5.1	
1.1.8 Seating		not covered
1.2. Control systems	5.2/5.3/5.4/5.5	
1.3.2 Risk of break-up during operation	5.2.5/5.2.10.1	
1.3.3 Risk due to falling or ejected objects	5.2.5/5.2.7/5.2.10.1/5.2.10.3/5.3.6	
1.3.7 Risks related to moving parts	5.5.1/5.5.2.1/5.5.3.1	
1.3.8 Choice of protection against risks arising from moving parts	5.5.1/5.5.2.1/5.5.3.1	
1.3.9 Risks of uncontrolled movements	5.2.6.1/5.2.10.2/5.4.1/5.4.2.1/5.4.6/5.4.7/5.5.1/5.5.3.1	

Documents
Document Sharing Hub
Full document details: BS EN ISO 16092-2:2020

The relevant Essential Requirements of Directive 2006/42/EC	Clause(s)/sub-clause(s) of this EN	Remarks/Notes
1.4 required characteristics of guards and protective devices	5.3.2/5.4.1/5.4.7/5.5.2.1 c)/5.5.3.1 b)	
1.5.1 Electricity supply	5.8.1	
1.5.4 Errors of fitting		not covered
1.6.1 Machinery maintenance	5.5.2.1/5.5.3.1/5.5.3.5	
1.7.1	5.2.6.2/7.5	
1.7.3	7.2	
1.7.4	7.4	

WARNING 1 — Presumption of conformity stays valid only as long as a reference to this European Standard is maintained in the list published in the Official Journal of the European Union. Users of this standard should consult frequently the latest list published in the Official Journal of the European Union.

WARNING 2 — Other Union legislation may be applicable to the product(s) falling within the scope of this standard.

AVA Documents
Document Sharing Hub

Full document details: BS EN ISO 16092-2:2020

Contents

Page

Foreword ..... **v**
Introduction ..... **vi**
1 Scope **1**
2 Normative references **1**
3 Terms and definitions **2**
4 List of significant hazards **3**
5 Safety requirements and/or measures **3**
5.1 General 3
5.2 Basic design considerations 3
5.2.1 Hydraulic and pneumatic systems — Common features 3
5.2.2 Pneumatic systems 3
5.2.3 Hydraulic systems 4
5.2.4 Electric systems 4
5.2.5 Mechanical brake 4
5.2.6 Slide adjustment 5
5.2.7 Slide counterbalance systems 5
5.2.8 Operating valves and exhaust systems 5
5.2.9 Additional requirements for Group 1 presses 6
5.2.10 Additional requirements for Group 2 presses 6
5.3 Mechanical hazards in the tools area 6
5.3.1 Major danger zone 6
5.3.2 Safeguarding measures 6
5.3.3 Other safety requirements 7
5.3.4 Release of trapped persons in the tools area 7
5.3.5 Release of persons trapped inside enclosed areas 7
5.3.6 Prevention of gravity fall during maintenance or repair 7
5.4 Control and monitoring system 8
5.4.1 Control and monitoring functions 8
5.4.2 Muting 10
5.4.3 Selection devices 10
5.4.4 Position sensors 10
5.4.5 Control devices 11
5.4.6 Valves 11
5.4.7 Performance level of safety functions 12
5.4.8 Single stroke function/device 28
5.4.9 Stopping-performance (overrun) monitoring function/device 28
5.4.10 Additional requirements for Group 1 presses 28
5.4.11 Additional requirements for Group 2 presses 30
5.5 Tool-setting, trial strokes, maintenance and lubrication 30
5.5.1 INCH mode 30
5.5.2 Additional requirements for Group 1 presses 31
5.5.3 Additional requirements for Group 2 presses 31
5.6 Mechanical hazards — Other 32
5.7 Slips, trips and falls 32
5.8 Protection against other hazards 32
5.8.1 Hazards related to servo drive system 32
6 Verification of the safety requirements and/or measures **32**
7 Information for use **37**
7.1 General 37
7.2 Marking 37
7.3 Warnings 38
7.4 Instruction handbook 38

AVA Documents
Document Sharing Hub

© ISO 2019 – All rights reserved

Full document details: BS EN ISO 16092-2:2020

7.5 Stroke indication means 38
Annex A (informative) **Significant hazards, hazardous situations and protective measures** **39**
Annex B (normative) **Calculation of minimum distances** **40**
Annex C (informative) **The setting of the rotary cam arrangement** **44**
Annex D (informative) **Determination of the stopping time t_2 for Group 1 presses** **54**
Bibliography **59**

© ISO 2019 – All rights reserved
Documents
Document Sharing Hub
Full document details: BS EN ISO 16092-2:2020

Foreword

ISO (the International Organization for Standardization) is a worldwide federation of national standards bodies (ISO member bodies). The work of preparing International Standards is normally carried out through ISO technical committees. Each member body interested in a subject for which a technical committee has been established has the right to be represented on that committee. International organizations, governmental and non-governmental, in liaison with ISO, also take part in the work. ISO collaborates closely with the International Electrotechnical Commission (IEC) on all matters of electrotechnical standardization.

The procedures used to develop this document and those intended for its further maintenance are described in the ISO/IEC Directives, Part 1. In particular, the different approval criteria needed for the different types of ISO documents should be noted. This document was drafted in accordance with the editorial rules of the ISO/IEC Directives, Part 2 (see www.iso.org/directives).

Attention is drawn to the possibility that some of the elements of this document may be the subject of patent rights. ISO shall not be held responsible for identifying any or all such patent rights. Details of any patent rights identified during the development of the document will be in the Introduction and/or on the ISO list of patent declarations received (see www.iso.org/patents).

Any trade name used in this document is information given for the convenience of users and does not constitute an endorsement.

For an explanation of the voluntary nature of standards, the meaning of ISO specific terms and expressions related to conformity assessment, as well as information about ISO's adherence to the World Trade Organization (WTO) principles in the Technical Barriers to Trade (TBT) see www.iso.org/iso/foreword.html.

This document was prepared by Technical Committee ISO/TC 39, *Machine tools*, Subcommittee SC 10, *Safety*.

Any feedback or questions on this document should be directed to the user's national standards body. A complete listing of these bodies can be found at www.iso.org/members.html.

A list of all parts in the ISO 16092 series can be found on the ISO website.

© ISO 2019 – All rights reserved

Documents
Document Sharing Hub
Full document details: BS EN ISO 16092-2:2020

Introduction

This document is a type-C standard as stated in ISO 12100.

This document is of relevance, in particular, for the following stakeholder groups representing the market players with regard to machinery safety:

— machine manufacturers (small, medium and large enterprises);

— health and safety bodies (regulators, accident prevention organisations, market surveillance etc.)

Others can be affected by the level of machinery safety achieved with the means of the document by the above-mentioned stakeholder groups:

— machine users/employers (small, medium and large enterprises);

— machine users/employees (e.g. trade unions, organizations for people with special needs);

— service providers, e. g. for maintenance (small, medium and large enterprises);

— consumers (in case of machinery intended for use by consumers).

The above-mentioned stakeholder groups have been given the possibility to participate at the drafting process of this document.

The machinery concerned and the extent to which hazards, hazardous situations or hazardous events are covered are indicated in the Scope of this document.

When requirements of this type-C standard are different from those which are stated in type-A or type-B standards, the requirements of this type-C standard take precedence over the requirements of the other standards for machines that have been designed and built according to the requirements of this type-C standard.

© ISO 2019 – All rights reserved
Documents
Document Sharing Hub
Full document details: BS EN ISO 16092-2:2020

Machine tools safety — Presses —

Part 2:
Safety requirement for mechanical presses

1 Scope

This document, in addition to ISO 16092-1, specifies technical safety requirements and measures to be adopted by persons undertaking the design, manufacture and supply of the following groups of mechanical presses and mechanical press production systems:

— Group 1: Presses with a part revolution clutch(es);

— Group 2: Presses with a servo drive system (Mechanical servo presses).

NOTE 1 Requirements in this document are essentially applicable to both groups of the mechanical press. If a requirement applies to only one group, then the group is specified.

NOTE 2 Other types of motorized drive systems provide similar functionalities to what is commonly called “servo drives” or "servo motors”, and as such their use is considered the same within the terms used in this document (e.g. variable frequency drive systems).

The presses covered by this document range in size from small high-speed machines with a single operator producing small workpieces to large relatively slow-speed machines with several operators and large complex workpieces.

This document deals with all significant hazards relevant to mechanical presses and ancillary devices (e.g. moving die cushions, work-piece ejectors, feeding and transfer systems) which are integral to the machine, when they are used as intended and under the conditions of misuse which are reasonably foreseeable by the manufacturer (see Clause 4). All phases of the machine life cycle as described in ISO 12100:2010, 5.4 have been taken into consideration.

NOTE 2 All significant hazards means those identified or associated with presses at the time of the publication of this document.

In addition to machines not covered by ISO 16092-1:2017, this document does not cover machines which:

a) transmit energy to impart press slide motion by using hydraulic or pneumatic means;

b) have two or more slides moving in different angular orientations from each other;

NOTE 3 This document applies to presses which have two or more slides moving in the same angular orientations, e.g. a press which has inner and outer slides.

c) transmit energy to impart press slide motion by using a linear motor mechanism(s).

2 Normative references

The following documents are referred to in the text in such a way that some or all of their content constitutes requirements of this document. For dated references, only the edition cited applies. For undated references, the latest edition of the referenced document (including any amendments) applies.

ISO 12100:2010, *Safety of machinery — General principles for design — Risk assessment and risk reduction*

ISO 13849-1:2015, *Safety of machinery — Safety-related parts of control systems — Part 1: General principles for design*

© ISO 2019 – All rights reserved

Documents
Document Sharing Hub
Full document details: BS EN ISO 16092-2:2020

ISO 13849-2:2012, *Safety of machinery — Safety-related parts of control systems — Part 2: Validation*

ISO 13855:2010, *Safety of machinery — Positioning of safeguards with respect to the approach speeds of parts of the human body*

ISO 16092-1:2017, *Machine tools safety — Presses — Part 1: General safety requirements*

ISO 16092-3:2017, *Machine tools safety — Presses — Part 3: Safety requirements for hydraulic presses*

IEC 60204-1:2016, *Safety of machinery — Electrical equipment of machines — Part 1: General requirements*

IEC 61800-5-1:2007+A1:2016, *Adjustable speed electrical power drive systems — Part 5-1: Safety requirements — Electrical, thermal and energy*

IEC 61800-5-2:2016, *Adjustable speed electrical power drive systems — Part 5-2: Safety requirements — Functional*

3 Terms and definitions

For the purposes of this document, the terms and definitions given in ISO 12100:2010, ISO 13849-1:2015, ISO 16092-1:2017 and the following apply.

ISO and IEC maintain terminological databases for use in standardization at the following addresses:

— ISO Online browsing platform: available at https://www.iso.org/obp

— IEC Electropedia: available at http://www.electropedia.org/

3.1
brake
mechanism for slowing, stopping and holding the slide/ram

3.2
mechanical brake
friction brake
brake (3.1) using dry or fluid friction

3.3
clutch
part revolution clutch
friction clutch
mechanism which engages or disengages the power transmission from the flywheel to the slide by means of friction at any point in the cycle

3.4
moving direction monitoring
monitoring function which monitors the slide moving direction, directly or indirectly

3.5
standstill monitoring
monitoring function which monitors the slide position, directly or indirectly

3.6
stopping-performance (overrun) monitoring
monitoring function which monitors the slide stopping time, angle or braking distance

3.7
servo drive system
system which replaces the need for a clutch by directly connecting a servo motor to the transmission system such as gear (motor reducer), timing belt drive mechanism, crank mechanism, mechanical link, ball screw, harmonic drive reducer, etc.

© ISO 2019 – All rights reserved
Documents
Document Sharing Hub
Full document details: BS EN ISO 16092-2:2020

3.8
protective stop
<function> stop initiated by a protective measure

3.9
safe energized standstill
safety function preventing an unexpected movement of the slide of more than a defined amount from the stopped position, with energy supplied to the servomotor(s) to resist to external forces, and without actuation of the mechanical brake(s)

3.10
safe de-energized standstill
safety function preventing an unexpected movement of the slide by removing the energy supply to the clutch, servomotor(s) and the mechanical brake(s)

3.11
safe stop
<function> stop initiated by a monitoring function

3.12
safe torque off
STO
function which prevents force-producing power from being provided to the motor

3.13
worst case
condition of the press when it would be under foreseeably unfavourable situations e.g., the press slide is in its most disadvantageous position, with a tool of maximum weight being used, etc.

4 List of significant hazards

This clause contains all the significant hazards, hazardous situations and events identified by risk assessment as significant for the machines defined in the scope and which require a specific action to eliminate or reduce the risk.

These hazards are listed in ISO 16092-1:2017, Annex A, and additional hazards are listed in Table A.1.

5 Safety requirements and/or measures

5.1 General

Mechanical presses shall comply with the safety requirements and/or protective/risk reduction measures of this clause. In addition, the machine shall be designed according to the principles of ISO 12100 for relevant but not significant hazards which are not dealt with by this document.

5.2 Basic design considerations

5.2.1 Hydraulic and pneumatic systems — Common features

ISO 16092-1:2017, 5.2.1, shall apply.

5.2.2 Pneumatic systems

ISO 16092-1:2017, 5.2.2, shall apply.

© ISO 2019 – All rights reserved

Documents
Document Sharing Hub
Full document details: BS EN ISO 16092-2:2020

5.2.3 Hydraulic systems

ISO 16092-1:2017, 5.2.3, shall apply.

5.2.4 Electric systems

ISO 16092-1:2017, 5.2.4, shall apply.

5.2.5 Mechanical brake

5.2.5.1 All mechanical presses shall be equipped with at least one mechanical brake, which conforms to the requirements from 5.2.5.2 to 5.2.5.4. The mechanical brake and its control system shall be designed so that, in the event of failure of the pneumatic, hydraulic or electrical supply, the mechanical brake engages immediately.

5.2.5.2 The mechanical brake shall be self-engaging by means of multiple spring assemblies of a compression-type that requires power or force from an external source for disengagement. The mechanical brake shall have sufficient capacity to stop and hold the slide and its attachments at any point in the full stroke range of the press and function when the clutch is disengaged or the servomotor is de-energized even if 50 % of the spring assemblies have failed.

5.2.5.3 The mechanical brake(s) shall be designed and constructed to ensure that:

a) all the springs are closely uniform in dimension, quality and rating;

b) the means of loading the springs are such that, when adjusted, the spring anchorages can be locked to prevent slackening back;

c) the arrangements for spring housing and of guide pins are such as to minimize binding;

d) any heat generated which can cause a hazardous event is dissipated;

e) effective arrangements are adopted to prevent penetration of lubricants to the brake friction surfaces, when this is not intended by the brake design;

f) any moisture, dust or lubricating oil, which breaks or corrodes packing material (e.g. gaskets and seals), cannot influence the required function adversely, e.g. by obstructing a fluid channel or otherwise affecting its efficiency;

g) the accumulation of dust, fluid or debris is minimized in areas likely to give rise to inefficient brake performance and that broken or loose components does not cause brake fault.

In addition, where provision is necessary for redundancy and monitoring of the brake control system/function (see Tables 1 and 2), in order to prevent any single fault from leading to the loss of the braking function:

h) springs are provided as defined in ISO 13849-2:2012, Tables A.2, A.3 and A.5, so that any fault which can occur in pressure coil springs is excluded;

i) all mechanical parts or elements are capable of providing the required rationales according to ISO 13849-2:2012, Table A.4, so that any fault which can occur in mechanical elements is excluded;

j) the engagement and disengagement of the brake do not affect its safe function;

k) the brake is designed so that failure of a component (e.g. for power transmission or screws) does not stress other components in such a way that rapid consequential dangerous failure is possible.

5.2.5.4 Band brake(s) shall not be used as a mechanical brake for this purpose of stopping the slide.

© ISO 2019 – All rights reserved
Documents
Document Sharing Hub
Full document details: BS EN ISO 16092-2:2020

NOTE A band brake is a brake where a flexible band lined with friction material is arranged around the circumference of a drum.

5.2.6 Slide adjustment

5.2.6.1 A means that is capable of supervisory control shall be provided to prevent the press from cycling while the slide adjustment circuit is enabled and to prevent operating the slide adjustment motor while the clutch is engaged for Group 1 presses or the servo motor is energized for Group 2 presses. This requirement does not apply when the slide adjustment motor is operable only in automatic cycle and with programmable control systems that compensate, e.g. tool wear during press operation.

5.2.6.2 The means of controlling the slide adjustment shall be clearly identified.

5.2.6.3 The up and down travel of the slide adjustment shall be limited; e.g. by limit switches, proximity switches or encoders.

5.2.7 Slide counterbalance systems

5.2.7.1 If provided, mechanical spring counterbalance systems shall incorporate means to retain system parts in the event of breakage and shall have the capability of holding the slide and its attachments at mid-stroke without the brake applied.

5.2.7.2 If provided, pneumatic counterbalance cylinders shall incorporate means to retain the piston and rod in case of breakage or loosening and shall have the capability of holding the slide and its attachments at any point in the cycle without the brake applied.

5.2.8 Operating valves and exhaust systems

5.2.8.1 Operating valves and exhaust systems used with fluid valves for mechanical brake(s), clutch(es) or combined clutch/brake unit(s) shall be designed to prevent deterioration of stopping performance in the event of failure.

5.2.8.2 Operating valves shall be designed to ensure that, when in the non-operating position, leakage past the inlet valve will escape sufficiently to prevent the build-up of pressure in mechanical brake(s), clutch(es) or combined clutch/brake unit(s) operating cylinder.

5.2.8.3 Exhaust ports, piping between mechanical brake(s), clutch(es) or combined clutch/brake unit(s), operating cylinders and valves, and exhaust systems used with clutch fluid valves shall be designed to prevent the deterioration of stopping performance of the press. Precautions shall be taken to ensure that the exhaust ports of operating valves are of adequate size to prevent residual pressure in the cylinder. The valve shall be selected so that the pressure ratio between the mechanical brake(s), clutch(es) or combined clutch/brake unit(s) is such that the residual pressure in the cylinder will not become excessive in the event of a valve fault.

NOTE Normally, a ratio of at least 3,5 to 1 between the spring pressure in the brake and the residual pressure in the cylinder is satisfactory.

5.2.8.4 If provided, manual override devices incorporated into operating valves shall be designed to include a captive lid or cover which requires the use of a tool or key to open it.

NOTE A manual override device is intended to be used to actuate the valves when required (e.g. maintenance).

5.2.8.5 If provided, electrical manual override devices shall be key-operated and their operation shall only be possible with the slide in BDC position, the motor off, and the flywheel stopped.

Documents
Document Sharing Hub

© ISO 2019 – All rights reserved

Full document details: BS EN ISO 16092-2:2020

5.2.9 Additional requirements for Group 1 presses

The engagement and disengagement of the part revolution clutch (friction clutch) and the mechanical brake shall not affect their safety function.

NOTE Combined clutch and brake units is a means to reduce the possibility of overlapping engagement.

The clutch and its control system shall be designed so that, in the event of the failure of a pneumatic, hydraulic or electrical supply, the clutch is disengaged immediately.

The clutch shall be designed and constructed to ensure that:

a) any moisture, dust or lubricating oil, which breaks or corrodes packing material (e.g. gaskets and seals), cannot influence the required function adversely, e.g. by obstructing a fluid channel or otherwise affecting their efficiency;

b) any heat generated which can cause a hazard is dissipated. Clutches are of a capacity capable of engaging and disengaging the stroke in the correct position, without excessive temperature rise, under conditions of maximum use of the clutch;

c) sufficient working clearances are provided to ensure that, the clutch will disengage upon removal of the external engaging force;

d) arrangements are made to prevent the accumulation of, and for the effective dispersal, debris evolved from friction surfaces in places where it can degrade (decrease) clutch performance;

e) the clutch is disengaged when the external clutch–engaging means is removed, deactivated, or de–energized;

f) if diaphragms are used in a clutch system, measures are taken to avoid damage by the cutting effect of sharp edges or wearing by rough surfaces. Evacuation of fluid shall not be prevented due to slackening of the diaphragm, e.g. due to material fatigue.

5.2.10 Additional requirements for Group 2 presses

5.2.10.1 Where a belt drive mechanism is utilized to transmit force or torque to decelerate or hold the slide, any single fault of the belt drive such as belt breakage, belt elongation, unfastening, looseness, belt pulley idling, tooth skipping, shall not lead to the loss of the braking function. If a fault, which would affect the stopping performance occurs, it shall be detected immediately, then the safe stop stated in 5.4.1.7 shall be initiated. No new cycle initiation shall be possible until the fault is eliminated.

5.2.10.2 Where Group 2 presses are capable of converting the kinetic energy of the slide into electrical energy and storing the electrical energy in devices e.g. capacitors, unintended slide movement resulting from electrical discharges from the devices shall be prevented.

5.2.10.3 The mechanical brake(s) shall always be engaged when the servomotor is de-energized.

5.3 Mechanical hazards in the tools area

5.3.1 Major danger zone

ISO 16092-1:2017, 5.3.1, shall apply.

5.3.2 Safeguarding measures

In addition to the requirements given in ISO 16092-1:2017, 5.3.2, the following shall apply.

The minimum distance shall be calculated according to Annex B.

© ISO 2019 – All rights reserved
Documents
Document Sharing Hub
Full document details: BS EN ISO 16092-2:2020

5.3.3 Other safety requirements

In addition to the requirements given in ISO 16092-1:2017, 5.3.3, the following shall apply.

For Group 1 presses, reverse running shall only be possible in the setting mode. It shall not be possible to start the motor if the press clutch is engaged. It shall not be possible to engage the clutch if the motor is switched off, except under-setting conditions.

5.3.4 Release of trapped persons in the tools area

ISO 16092-1:2017, 5.3.4, shall apply.

5.3.5 Release of persons trapped inside enclosed areas

ISO 16092-1:2017, 5.3.5, shall apply.

5.3.6 Prevention of gravity fall during maintenance or repair

In addition to the requirements given in ISO 16092-1:2017, 5.3.6, the following shall apply.

5.3.6.1 Mechanical slide restraint devices shall be designed and constructed to ensure that:

a) the primary action of the mechanical slide restraint device to prevent hazardous slide movements is performed by the removal or reduction of voltage or fluid pressure or, if binary logic elements are considered, by passage from state 1 to state 0 (where state 1 represents the highest energy state);

b) for Group 1 presses, where the mechanical slide restraint device is interlocked, the interlocking function shall remove the energy supply to the clutch control circuits, the brake system and the main drive motor;

c) for Group 2 presses, where the mechanical slide restraint device is interlocked, the interlocking function shall remove the energy supply to the servo motors control circuits and the brake system;

d) the mechanical slide restraint devices are of adequate strength to support the total weight of the slide, the tool holder and the upper tool. The device shall have a minimum safety factor of 2 based on the maximum anticipated load;

NOTE The maximum anticipated load is normally the static weight of the slide(s), upper die(s), tooling, and all attachments that apply downward force due to gravity. The effects of the counter balance system cannot be considered in calculating the maximum anticipated load.

e) hazardous events caused by a momentary malfunction (e.g. the falling of the slide due to being subjected to impact) shall be analysed and eliminated;

f) when the mechanical slide restraint device is actuated, two independent means of indication verifying its engagement shall be provided.

A mechanical brake fulfilling the requirements a) to f) and designed according to 5.2.5 can also realise the function of a mechanical slide restraint device. In this case, stopping-performance (overrun) monitoring according to 5.4.9 shall be implemented. For Group 2 presses (see also 5.4.11).

5.3.6.2 Safety blocks or scotches shall be designed and constructed to ensure that:

a) where the safety blocks are interlocked, the interlocking function shall remove the energy supply to the clutch control circuits, the brake system and the main drive motor for Group 1 presses or initiate a safe de-energized standstill for Group 2 presses;

b) it is of adequate strength to support the total weight of the slide, the tool holder and the upper tool. The blocks shall have a minimum safety factor of 2 based on the maximum anticipated load;

© ISO 2019 – All rights reserved

Documents
Document Sharing Hub
Full document details: BS EN ISO 16092-2:2020

c) its shape and its length are appropriate for insertion and use between the slide (or the tool) and the bolster (or the die).

NOTE Some safety blocks are adjustable in length.

5.3.6.3 The hydraulic restraint device of screw presses shall comply with the requirements of ISO 16092-3:2017, 5.3.7.2 and 5.3.7.4. Where the hydraulic restraint device is interlocked, the interlocking function shall initiate a safe de-energized standstill (see Figure 1)

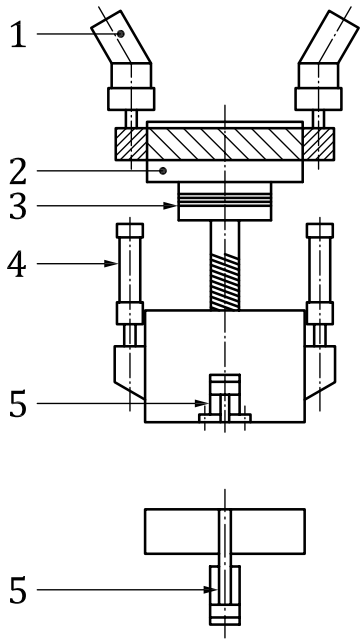

Key

1 motors
2 flywheel
3 clutch
4 hydraulic cylinders used as a restraint device
5 ejectors

Figure 1 — Example of a hydraulic restraint device of a screw press

5.4 Control and monitoring system

5.4.1 Control and monitoring functions

In addition to the requirements given in ISO 16092-1:2017, 5.4.1, the following shall apply.

5.4.1.1 In the event of an intervention of an adopted protective measure (interlocking guard without guard locking, ESPE using the AOPD, two-hand control device and hold-to-run control device with a slow closing speed), a protective stop shall be initiated.

When interlocking guard with guard locking is used, opening of the guard shall only be possible with safe de-energized standstill (safe de-energized standstill shall remain active until the guard is closed and locked).

© ISO 2019 – All rights reserved
Documents
Document Sharing Hub
Full document details: BS EN ISO 16092-2:2020

5.4.1.2 For Group 2 presses, stop functions shall be designed and installed in accordance with 5.4.1.2.1 to 5.4.1.2.3.

5.4.1.2.1 Type 0 stop function shall consist in immediately removing the electrical power to the servomotors using a stop category 0 of IEC 60204-1:2016, 9.2.2 (e.g. using a STO sub-function as defined in IEC 61800-5-2:2016, 4.2.3.2) and immediately removing power (e.g. pneumatic) to the mechanical brake(s) to stop and hold-the slide.

5.4.1.2.2 Type 1 stop function shall consist in:

— decelerating with power available to the servomotors to achieve the stop of the slide and then, when the stop is achieved, removing the electrical power to the servomotors, using a SS1 sub-function as defined in IEC 61800-5-2:2016, 4.2.3.3b) (SS1-r) or 4.2.3.3 c) (SS1-t); and

— removing the power (e.g. pneumatic) to the mechanical brake(s) to hold the slide.

The monitoring of Type 1 stop function shall initiate a safe stop when a fault is detected, (except presses comprised of multiple independent servo drive systems for which the stopping performances are still achieved in the event of a fault).

5.4.1.2.3 Type 2 stop function shall consist in a deceleration with power available to the servomotors to achieve the stop of the slide and, when the stop is achieved, hold the slide using a safe energized standstill function, using a SS2–r sub-function as defined in IEC 61800-5-2: 2016, 4.2.3.4 b).

The monitoring of Type 2 stop function shall initiate a safe stop when a fault is detected, (except presses comprised of multiple independent servo drive systems for which the stopping performances are still achieved in the event of a fault).

5.4.1.3 Safe standstill functions shall be designed and installed in accordance with 5.4.1.3.1 and 5.4.1.3.2.

5.4.1.3.1 For Group 2 presses, safe energized standstill shall be achieved by using a SOS sub-function as defined in IEC 61800-5-2:2016, 4.2.4.2.

During a safe energized standstill, standstill monitoring shall initiate a safe stop in case of any unintended dangerous closing stroke of the slide. The maximum unintended closing stroke from the initial energized standstill position to the safe de-energized standstill position achieved after safe stop shall not exceed 2 mm.

5.4.1.3.2 Safe de-energized standstill shall stop and hold the slide.

— For Group 1 presses, power shall be removed to the clutch and the mechanical brake.

— For Group 2 presses, electrical power shall be removed to the servomotors (e.g. using a STO sub-function as defined in IEC 61800-5-2:2016, 4.2.3.2) and power (e.g. pneumatic) removed to the mechanical brake(s).

5.4.1.4 For Group 1 presses, emergency stop function and protective stop function shall disengage the clutch and engage the mechanical brake(s) to stop and hold the slide. Electrical safety related parts of this function shall act as a stop category 0 of IEC 60204-1:2016, 9.2.2.

For Group 2 presses, emergency stop function and protective stop function shall operate as a type 0 or type 1 stop function.

5.4.1.5 If presses are equipped with pneumatic counterbalance cylinders, low pressure cut-off arrangements shall be provided to monitor failure of the counterbalance capability (e.g. a sudden loss of pressure, an air supply failure). If the low pressure cut-off arrangements detect such a failure, then the

© ISO 2019 – All rights reserved

Documents
Document Sharing Hub
Full document details: BS EN ISO 16092-2:2020

protective stop function shall be initiated immediately. Reactivation of the motor (s) or the clutch shall require restoration of a normal air supply.

5.4.1.6 Monitoring functions shall initiate a safe stop in case of fault detection.

5.4.1.7 For Group 1 presses, safe stop shall disengage the clutch and engage the mechanical brake(s) to stop and hold the slide. Electrical safety related parts of this function shall act as a stop category 0 of IEC 60204-1:2016, 9.2.2. No new cycle initiation shall be possible until the fault is eliminated

For Group 2 presses, safe stop shall operate as a type 0 stop function. No new cycle initiation shall be possible until the fault is eliminated.

5.4.2 Muting

In addition to the requirements given in ISO 16092-1:2017, 5.4.2, the following shall apply.

5.4.2.1 For Group 2 presses, during muting, the possibility of inconsistency between the motions of the slide and the motor shaft due to any fault in the mechanical linkage (e.g. chain or belt drive, position sensor coupling) or any fault of servo drive system shall be taken into account when designing and implementing these muting functions.

If muting is active during the opening stroke, safe stop shall be immediately initiated if:

— an unintended decrease of the opening speed of the slide has occurred before the programmed stop position has been achieved;

— the moving direction monitoring has detected inversion of the movement of the slide; or

— an unintended loss of power supply happens.

When muting is activated, monitoring functions for the above parameters shall be initiated at same time.

If muting is active during type 2 stop function, the standstill monitoring stated in 5.4.1.3.1 shall be activated.

5.4.2.2 No muting shall be executed during automatic cycle (see ISO 16092-1:2017, 5.4.2).

5.4.3 Selection devices

ISO 16092-1:2017, 5.4.3, shall apply.

5.4.4 Position sensors

In addition to the requirements given in ISO 16092-1:2017, 5.4.4, the following shall apply.

5.4.4.1 The position sensors (e.g. position switches, proximity switches), slide motion/position feedback sensors (e.g. encoders, resolvers) and the means of their operation (e.g. cams) shall be designed to comply with ISO 16092-1:2017, 5.4.4.

5.4.4.2 The position sensors and the slide motion/position feedback sensors shall be so arranged that they will not be damaged in the event of over-travel of moving parts. Where mechanical means are used (e.g. a cam and a follower), the means shall be so designed that reverse rotation is possible without damage.

5.4.4.3 The position sensors and the slide motion/position feedback sensors, if used as parts which provide a safety function [e.g. muting, stopping-performance (overrun) monitoring, etc.], shall have direct opening action (see IEC 60947-5-1:2016, Annex K) or provide similar reliability to achieve the required performance level.

© ISO 2019 – All rights reserved
Documents
Document Sharing Hub
Full document details: BS EN ISO 16092-2:2020

5.4.4.4 Where mechanical cams are used, they shall be positively secured to the shaft. All cams and relevant switches shall be in a locked enclosure.

5.4.4.5 If the camshaft is connected to the crankshaft by a clutch, the clutch engagement shall be positive, e.g. by gearing.

5.4.4.6 The maximum alteration of the rotary cam arrangement shall be mechanically limited to an angle of maximum 60° (see Annex C).

NOTE The maximum alteration is commonly limited to an angle of 45°.

5.4.4.7 Cam discs shall be so applied that a wrong or unintended fitting cannot cause accidents, and:

a) the limit switches and cams used to control of the press shall be fixed to each other and adequately secured. Unsecured nuts or bolts are not permissible;

b) the position of the limit switches and cam plates in relation to each other shall be marked;

c) the possibility of re-adjusting limit switches or cams shall be limited by fixed end stops, so that the muting time during the closing movement of the press cannot exceed the press overall response time with any combination of speed and stroke length.

5.4.4.8 Where position sensors are used for safety functions, e.g. for muting or for the stopping-performance (overrun) monitoring device, and are actuated by a camshaft which is indirectly driven by a crankshaft (e.g. a duplex chain drive between the camshaft and the crankshaft), indirect drive shall be monitored in such a way that, if it fails, a safe stop shall be initiated and no new cycle initiation shall be possible until the fault is eliminated.

5.4.5 Control devices

ISO 16092-1:2017, 5.4.5, shall apply.

5.4.6 Valves

Where it is necessary to provide for redundancy and monitoring of the control system for mechanical brake(s), clutch or combined clutch/brake unit(s) (see Tables 1 and 2), the valves for fluid release shall fulfil the following requirements.

a) The deterioration of stopping performance of the press due to any single fault in the operating valve(s), including the valve solenoid(s), shall be prevented by using valves which directly control the fluid to the operated mechanical brake(s), clutch or combined clutch/brake unit(s), or the equivalent in the case of other drive mechanisms.

b) If a single fault occurs, the control system for mechanical brake(s), clutch or combined clutch/brake unit(s) shall prevent further operation. Resuming normal operation shall only be possible by a restricted means, such as a tool, a key or an electronic password.

c) When valve monitoring is required, the valve(s) shall have an inherent monitoring system in which valve failure is self-revealing, or sensors detecting the valve state shall be an integral part of the valves.

d) Measures (e.g. separate wiring) shall be provided so that a single fault in the wiring cannot activate both solenoids.

e) A short circuit between valve connections (e.g. solenoid to solenoid, solenoid to self-monitoring assembly) shall be avoided or detected automatically and shall not lead to additional or unexpected slide motion.

© ISO 2019 – All rights reserved

Documents
Document Sharing Hub
Full document details: BS EN ISO 16092-2:2020