BS EN ISO 1660:2017

BSI Standards Publication

Geometrical product specifications (GPS) — Geometrical tolerancing — Profile tolerancing (ISO 1660:2017)

Documents
Document Sharing Hub

Full document details: BS EN ISO 1660:2017

National foreword

This British Standard is the UK implementation of EN ISO 1660:2017. It supersedes BS EN ISO 1660:1996 which is withdrawn.

The UK participation in its preparation was entrusted to Technical Committee TDW/4, Technical Product Realization.

A list of organizations represented on this committee can be obtained on request to its secretary.

This publication does not purport to include all the necessary provisions of a contract. Users are responsible for its correct application.

© The British Standards Institution 2017.
Published by BSI Standards Limited 2017

ISBN 978 0 580 83261 1

ICS 01.100.01

Compliance with a British Standard cannot confer immunity from legal obligations.

This British Standard was published under the authority of the Standards Policy and Strategy Committee on 28 February 2017.

Amendments/Corrigenda issued since publication

Date	Text affected

Documents
Document Sharing Hub

Full document details: BS EN ISO 1660:2017

EUROPEAN STANDARD

NORME EUROPÉENNE

EUROPÄISCHE NORM

EN ISO 1660

February 2017

ICS 01.100.01; 17.040.40

Supersedes EN ISO 1660:1995

English Version

Geometrical product specifications (GPS) - Geometrical tolerancing - Profile tolerancing (ISO 1660:2017)

Spécification géométrique des produits (GPS) - Tolérancement géométrique - Tolérancement des profils (ISO 1660:2017)

Geometrische Produktspezifikation (GPS) - Geometrische Tolerierung - Profiltolerierung (ISO 1660:2017)

This European Standard was approved by CEN on 14 December 2016.

CEN members are bound to comply with the CEN/CENELEC Internal Regulations which stipulate the conditions for giving this European Standard the status of a national standard without any alteration. Up-to-date lists and bibliographical references concerning such national standards may be obtained on application to the CEN-CENELEC Management Centre or to any CEN member.

This European Standard exists in three official versions (English, French, German). A version in any other language made by translation under the responsibility of a CEN member into its own language and notified to the CEN-CENELEC Management Centre has the same status as the official versions.

CEN members are the national standards bodies of Austria, Belgium, Bulgaria, Croatia, Cyprus, Czech Republic, Denmark, Estonia, Finland, Former Yugoslav Republic of Macedonia, France, Germany, Greece, Hungary, Iceland, Ireland, Italy, Latvia, Lithuania, Luxembourg, Malta, Netherlands, Norway, Poland, Portugal, Romania, Serbia, Slovakia, Slovenia, Spain, Sweden, Switzerland, Turkey and United Kingdom.

EUROPEAN COMMITTEE FOR STANDARDIZATION
COMITÉ EUROPÉEN DE NORMALISATION
EUROPÄISCHES KOMITEE FÜR NORMUNG

CEN-CENELEC Management Centre: Avenue Marnix 17, B-1000 Brussels

© 2017 CEN All rights of exploitation in any form and by any means reserved worldwide for CEN national Members.

Ref. No. EN ISO 1660:2017 E

Documents
Document Sharing Hub

Full document details: BS EN ISO 1660:2017

European foreword

This document (EN ISO 1660:2017) has been prepared by Technical Committee ISO/TC 213 "Dimensional and geometrical product specifications and verification" in collaboration with Technical Committee CEN/TC 290 "Dimensional and geometrical product specification and verification" the secretariat of which is held by AFNOR.

This European Standard shall be given the status of a national standard, either by publication of an identical text or by endorsement, at the latest by August 2017 and conflicting national standards shall be withdrawn at the latest by August 2017.

Attention is drawn to the possibility that some of the elements of this document may be the subject of patent rights. CEN [and/or CENELEC] shall not be held responsible for identifying any or all such patent rights.

This document supersedes EN ISO 1660:1995.

According to the CEN-CENELEC Internal Regulations, the national standards organizations of the following countries are bound to implement this European Standard: Austria, Belgium, Bulgaria, Croatia, Cyprus, Czech Republic, Denmark, Estonia, Finland, Former Yugoslav Republic of Macedonia, France, Germany, Greece, Hungary, Iceland, Ireland, Italy, Latvia, Lithuania, Luxembourg, Malta, Netherlands, Norway, Poland, Portugal, Romania, Serbia, Slovakia, Slovenia, Spain, Sweden, Switzerland, Turkey and the United Kingdom.

Endorsement notice

The text of ISO 1660:2017 has been approved by CEN as EN ISO 1660:2017 without any modification.

Documents
Document Sharing Hub

Full document details: BS EN ISO 1660:2017

Contents

Page

Foreword ... **iv**
Introduction ... **v**
1 Scope ... **1**
2 Normative references ... **1**
3 Terms and definitions ... **1**
4 Symbols ... **2**
5 Rules for profile tolerancing ... **3**
5.1 General ... 3
5.2 Default rules for profile tolerancing ... 4
5.2.1 Rule A: Definition of the theoretically exact feature (TEF) ... 4
5.2.2 Rule B: Type of toleranced feature ... 5
5.2.3 Rule C: Definition of the tolerance zone ... 5
5.3 Rules for profile tolerancing using additional specification elements ... 7
5.3.1 Rule D: Toleranced feature specification elements ... 7
5.3.2 Rule E: Unequally disposed tolerance zone ... 8
5.3.3 Rule F: Linear tolerance zone offset ... 8
5.3.4 Rule G: Angular tolerance zone offset ... 8
5.3.5 Rule H: Variable tolerance zone width ... 8
5.3.6 Rule I: Filtered feature specification elements ... 8
5.3.7 Rule J: Association and parameter specification elements ... 9
5.3.8 Rule K: Associated toleranced feature specification elements ... 9
5.3.9 Rule L: Non-rigid part ... 9
Annex A (informative) **Compound features** ... **10**
Annex B (informative) **Illustration of the rules** ... **12**
Annex C (informative) **Former practices** ... **42**
Annex D (informative) **Relation to the GPS matrix model** ... **44**
Bibliography ... **45**

© ISO 2017 – All rights reserved

Documents
Document Sharing Hub
Full document details: BS EN ISO 1660:2017

Foreword

ISO (the International Organization for Standardization) is a worldwide federation of national standards bodies (ISO member bodies). The work of preparing International Standards is normally carried out through ISO technical committees. Each member body interested in a subject for which a technical committee has been established has the right to be represented on that committee. International organizations, governmental and non-governmental, in liaison with ISO, also take part in the work. ISO collaborates closely with the International Electrotechnical Commission (IEC) on all matters of electrotechnical standardization.

The procedures used to develop this document and those intended for its further maintenance are described in the ISO/IEC Directives, Part 1. In particular the different approval criteria needed for the different types of ISO documents should be noted. This document was drafted in accordance with the editorial rules of the ISO/IEC Directives, Part 2 (see www.iso.org/directives).

Attention is drawn to the possibility that some of the elements of this document may be the subject of patent rights. ISO shall not be held responsible for identifying any or all such patent rights. Details of any patent rights identified during the development of the document will be in the Introduction and/or on the ISO list of patent declarations received (see www.iso.org/patents).

Any trade name used in this document is information given for the convenience of users and does not constitute an endorsement.

For an explanation on the meaning of ISO specific terms and expressions related to conformity assessment, as well as information about ISO's adherence to the World Trade Organization (WTO) principles in the Technical Barriers to Trade (TBT) see the following URL: www.iso.org/iso/foreword.html.

This document was prepared by Technical Committee ISO/TC 213, *Dimensional and geometrical product specifications and verification*.

This third edition cancels and replaces the second edition (ISO 1660:1987), which has been technically revised with the following changes:

— the requirements for defining the theoretically exact feature (the nominal geometry) have been made more explicit;

— the definition of what constitutes the toleranced feature has been clarified and updated to follow the feature principle, (see ISO 8015:2011, 5.5);

— tools for defining specifications for restricted features and compound features have been added;

— tools for defining specifications using unequally disposed or offset tolerance zones have been added;

— tools for defining specifications using tolerance zone of variable width have been added.

© ISO 2017 – All rights reserved
Documents
Document Sharing Hub
Full document details: BS EN ISO 1660:2017

Introduction

This document is a geometrical product specification (GPS) standard and is to be regarded as a general GPS standard (see ISO 14638). It influences the chain links A, B and C of the chains of standards on form, orientation and location.

The ISO GPS Masterplan given in ISO 14638 gives an overview of the ISO GPS system of which this document is a part. The fundamental rules of ISO GPS given in ISO 8015 apply to this document and the default decision rules given in ISO 14253-1 apply to specifications made in accordance with this document, unless otherwise indicated.

For more detailed information of the relation of this document to the GPS matrix model, see Annex D.

This document provides rules for profile tolerancing.

For the presentation of lettering (proportions and dimensions), see ISO 3098-2.

All figures in this document for the 2D drawing indications have been drawn in first-angle projection with dimensions and tolerances in millimetres. It should be understood that third-angle projection and other units of measurement could have been used equally well without prejudice to the principles established. For all figures giving specification examples in 3D, the dimensions and tolerances are the same as for the similar figures shown in 2D.

The figures in this document represent either 2D drawing views or 3D axonometric views on 2D drawings and are intended to illustrate how a specification can be fully indicated with visible annotation. For possibilities of illustrating a specification, where elements of the specification may be available through a query function or other interrogation of information in the 3D CAD model and rules for attaching specifications to 3D CAD models, see ISO 16792.

The figures in this document illustrate the text and are not intended to reflect an actual application. Consequently, the figures are not fully dimensioned and specified, showing only the relevant general principles. Neither are the figures intended to imply a particular display requirement in terms of whether hidden detail, tangent lines or other annotations are shown or not shown. Many figures have lines or details removed for clarity, or added or extended to assist with the illustration of the text. See Table 1 for the line types used in definition figures.

In order for a GPS specification to be unambiguous, the partition defining the boundary of the toleranced feature, as well as the filtering should be well defined. Currently, the detailed rules for partitioning and the default for filtering are not defined in GPS standards.

For a definitive presentation (proportions and dimensions) of symbols for geometrical tolerancing, see ISO 7083 and ISO 1101:2017, Annex F.

For the purposes of this document, the terms “axis” and “median plane” are used for derived features of perfect form, and the terms “median line” and “median surface” for derived features of imperfect form. Furthermore, the following line types have been used in the explanatory illustrations, i.e. those representing non-technical drawings for which the rules of ISO 128 (all parts) apply.

© ISO 2017 – All rights reserved

Documents
Document Sharing Hub
Full document details: BS EN ISO 1660:2017

Table 1

Feature level	Feature type	Details	Line type	
			Visible	Behind plane/ surface
Nominal feature	integral feature	point line/axis surface/plane	wide continuous	narrow dashed
	derived feature	point line/axis surface/plane	narrow long dashed dotted	narrow dashed dotted
Real feature	integral feature	surface	wide freehand continuous	narrow freehand dashed
Extracted feature	integral feature	point line surface	wide short dashed	narrow short dashed
	derived feature	point line surface	wide dotted	narrow dotted
Filtered feature	integral feature	line surface	continuous narrow	continuous narrow
Associated feature	integral feature	point straight line plane	wide doubled-dashed double-dotted	narrow double-dashed double-dotted
	derived feature	point straight line (axis) plane	narrow long dashed double-dotted	wide dashed double-dotted
	datum	point line/axis surface/plane	wide long dashed double-short dashed	narrow long dashed double-short dashed
Tolerance zone limits, tolerance planes		line surface	continuous narrow	narrow dashed
Section, illustration plane, drawing plane, aid plane		line surface	narrow long dashed short dashed	narrow dashed short dashed
Extension, dimension, leader and reference lines		line	continuous narrow	narrow dashed

Contrary to other kinds of geometrical tolerancing, profile tolerancing also allows geometrical tolerancing of non-straight lines and non-flat surfaces, in addition to simpler features, such as planes, cylinders, etc. This makes profile tolerancing more complex than other geometrical tolerancing with respect to the definition of the nominal geometry and the extent of the toleranced feature. This document expands on and provides tools and rules for these two complexities.

This edition of ISO 1660 is a pilot project for writing rule-based standards for geometrical tolerancing rather than example-based standards. In the long term, it is envisioned that the content of this document will be integrated into a future rule-based ISO 1101.

© ISO 2017 – All rights reserved
Documents
Document Sharing Hub
Full document details: BS EN ISO 1660:2017

This document references other standards for rules for GPS tolerancing in general and geometrical tolerancing in particular, rather than repeating those rules. These GPS principles and rules include, but are not limited to:

— the feature principle (see ISO 8015:2011, 5.4);

— the independency principle (see ISO 8015:2011, 5.5);

— the rules for implicit TEDs (see ISO 5458:1998, 4.3);

— the width of the tolerance zone applies normal to the toleranced feature (See ISO 1101:2017, Clause 7);

— the rules for identifying the toleranced features (see ISO 1101:2017, Clause 6 and 9.1);

— form specifications, i.e. specifications without reference to a datum, a datum system or a pattern, constrain neither orientation nor location (see ISO 1101:2017, 4.8);

— the tolerance zone can be constrained by reference to datums (see ISO 5459).

© ISO 2017 – All rights reserved

Documents
Document Sharing Hub
Full document details: BS EN ISO 1660:2017

Documents
Document Sharing Hub

INTERNATIONAL STANDARD ISO 1660:2017(E)

Geometrical product specifications (GPS) — Geometrical tolerancing — Profile tolerancing

IMPORTANT — The illustrations included in this document are intended to illustrate the text and/or to provide examples of the related technical drawing specification; these illustrations are not fully dimensioned and toleranced, showing only the relevant general principles. In particular, the illustrations do not contain filter specifications. As a consequence, the illustrations are not a representation of a complete workpiece and are not of a quality that is required for use in industry (in terms of full conformity with the standards prepared by ISO/TC 10 and ISO/TC 213), and as such are not suitable for projection for teaching purposes.

1 Scope

This document gives the rules for geometrical specifications of integral and derived features, using the line profile and surface profile characteristic symbols as defined in ISO 1101.

2 Normative references

The following documents are referred to in the text in such a way that some or all of their content constitutes requirements of this document. For dated references, only the edition cited applies. For undated references, the latest edition of the referenced document (including any amendments) applies.

ISO 1101:2017, *Geometrical product specifications (GPS) — Geometrical tolerancing — Tolerances of form, orientation, location and run-out*

ISO 5459:2011, *Geometrical product specifications (GPS) — Geometrical tolerancing — Datums and datum systems*

ISO 8015:2011, *Geometrical product specifications (GPS) — Fundamentals — Concepts, principles and rules*

ISO 16792, *Technical product documentation — Digital product definition data practices*

ISO 17450-1, *Geometrical product specifications (GPS) — General concepts — Part 1: Model for geometrical specification and verification*

ISO 17450-3, *Geometrical product specifications (GPS) — General concepts — Part 3: Toleranced features*

ISO 22432, *Geometrical product specifications (GPS) — Features utilized in specification and verification*

3 Terms and definitions

For the purposes of this document, the terms and definitions given in ISO 1101, ISO 5459, ISO 8015, ISO 17450-1, ISO 17450-3, ISO 22432 and the following apply.

ISO and IEC maintain terminological databases for use in standardization at the following addresses:

— IEC Electropedia: available at http://www.electropedia.org/

— ISO Online browsing platform: available at http://www.iso.org/obp

3.1
profile tolerancing
geometrical tolerancing using the line profile symbol or the surface profile symbol

© ISO 2017 – All rights reserved

Documents
Document Sharing Hub
Full document details: BS EN ISO 1660:2017

3.2
line profile
property of a line

3.3
surface profile
property of a surface

3.4
non-redundant degree of freedom
degree of freedom for which the tolerance zone is not invariant

4 Symbols

See Table 2.

Table 2 — Symbols for geometrical characteristics

⌒	Line profile symbol
⌓	Surface profile symbol

These symbols shall be used in the characteristic section of the tolerance indicator, see ISO 1101:2017, 8.2.

The nominal features, for which each symbol can be used, are given in Table 3.

Table 3 — Valid geometrical characteristic symbol and nominal toleranced feature combinations

Toleranced feature	⌒	⌓
Integral straight line	X	
Derived straight line	X	
Integral non-straight line	X	
Derived non-straight line	X	
Integral flat surface		X
Derived flat surface		X
Integral non-flat surface		X
Derived non-flat surface		X

For straight lines and planes, there are other characteristic symbols that directly provide the information about the shape of the toleranced feature, e.g. flatness for planes and straightness for straight lines. The profile characteristic symbols may be used for straight lines and planes. However, in this case, to determine the nominal shape of the toleranced feature, it is necessary to verify that there is no indication that the feature is nominally non-flat or non-straight on the drawing or in the CAD model, as applicable.

NOTE A nominally planar surface and a nominally curved surface with a large radius may both appear as a straight line on the drawing and the profile characteristic symbols can be used for both types of surfaces. However, for the curved surface there will be an indication on the drawing or explicit or implicit TEDs in the CAD model, that the surface is not flat. For the planar surface, there will be no such indication on a drawing. On a drawing, it is this indication or absence of indication that is used to determine the nominal shape of the feature in this case. In a CAD model, the model data are used to determine the nominal shape of the feature.

Additional symbols used in this document are given in Table 4 along with a reference to where they are defined.

© ISO 2017 – All rights reserved
Documents
Document Sharing Hub
Full document details: BS EN ISO 1660:2017

Table 4 — Additional symbols used in this document

Description	Symbol	Reference
Combined zone	CZ	ISO 1101:2017, 8.2.2.1.2
Separate zones	SZ	ISO 1101:2017, 8.2.2.1.2
Unspecified linear tolerance zone offset	OZ	ISO 1101:2017, 8.2.2.1.4.1
Specified tolerance zone offset	UZ	ISO 1101:2017, 8.2.2.1.3
United feature	UF	ISO 1101:2017, 3.9
Between	↔	ISO 1101:2017, 9.1.4
Unspecified angular tolerance zone offset	VA	ISO 1101:2017, 8.2.2.1.4.2
All around		ISO 1101:2017, 9.1.2
All over		ISO 1101:2017, 9.1.2
Collection plane indicator	// B	ISO 1101:2017, 16
Intersection plane indicator	// B	ISO 1101:2017, 13
Direction feature indicator	// B	ISO 1101:2017, 15
Orientation constraint only	><	ISO 5459:2011, 7.4.2.8

5 Rules for profile tolerancing

5.1 General

For the basic rules for geometrical tolerancing, of which profile tolerancing is a part, see ISO 1101.

When a drawing shall be used in conjunction with a CAD model, an unambiguous reference to the CAD model shall be made on the drawing and the CAD model shall comply with ISO 16792.

According to the feature principle (see ISO 8015:2011, 5.4), by default a profile specification applies to one complete single feature as defined in ISO 22432. It is the designer's responsibility to select the features or parts of features to which a specification applies and either indicate that on a 2D drawing using appropriate symbology or define it in the CAD model.

According to the independency principle (see ISO 8015:2011, 5.5), by default a profile specification that applies to more than one single feature as defined in ISO 22432, applies to those features independently. If it is desired that the profile specification applies to the features as if they were one, or with some constraint amongst the tolerance zones for the single features, it is the designer's responsibility to either indicate this on a 2D drawing using appropriate symbology or define it in the CAD model.

The "all over" indication and the "all around" indication shall always be combined with UF, CZ or SZ, when used for geometrical tolerancing, to make it explicit whether the specification applies to a united feature, defines a combined zone or defines a set of separate zones, except when all the non-redundant degrees of freedom for all the tolerance zones are locked by reference to datums.

NOTE 1 The meaning of CZ and SZ is identical when the specification defines a set of tolerance zones for which all non-redundant degrees of freedom are locked by reference to datums.

NOTE 2 In previous revisions of this document, "all around" was used without any other indication. That made it ambiguous whether the specification applied to the features independently or the specification defined a combined zone. The requirement to always use UF, CZ or SZ is a failsafe indication.

© ISO 2017 – All rights reserved

Documents
Document Sharing Hub
Full document details: BS EN ISO 1660:2017

5.2 Default rules for profile tolerancing

5.2.1 Rule A: Definition of the theoretically exact feature (TEF)

The theoretically exact feature (TEF) of the toleranced feature shall be defined with theoretically exact dimensions (TEDs) or be embedded in the CAD model. For a feature of size, the nominal shape of the TEF shall be defined, but the nominal size of the TEF may be undefined, see Figure 4 b).

These TEDs may include:

— explicit TEDs;

— implicit TEDs;

— tables of values and interpolation algorithms;

— mathematical functions including splines and other formulae;

— reference to CAD model queries.

A TEF that appears to be a nominally straight line or a nominal plane on the drawing with no explicit indication to the contrary, shall be considered a nominally straight line or a nominal plane, respectively, defined by implicit TEDs.

The shape of a TEF that is nominally a circle, a cylinder, a sphere or a cone is implicitly defined.

The shape of a TEF that is nominally a torus is defined when the directrix size is defined by an explicit TED.

The size of a feature of size is undefined, and shall therefore be considered variable, unless it is defined by an explicit TED, see Figures 1 and 4. The size of the generatrix of a torus is undefined, unless it is defined by an explicit TED. See also rules F and G.

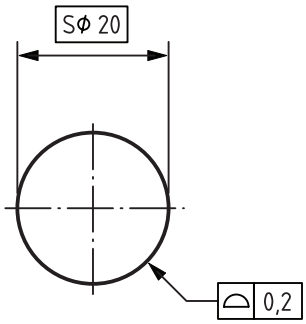

NOTE The diameter of the median surface of the tolerance zone is fixed at the nominal size.

Figure 1 — Surface profile specification for a sphere of defined nominal size, given by a TED

If the TEF of a feature is defined by a table with sets of coordinates, the interpolation algorithm for defining points between the given coordinates shall also be defined.

NOTE 1 There is no standardized way to indicate the interpolation algorithm.

NOTE 2 A non-exhaustive list of interpolation algorithms includes:

— linear interpolation;

— cubic spline interpolation (with or without periodicity conditions);

— NURBS.

EXAMPLE The points are connected by straight lines.

© ISO 2017 – All rights reserved
Documents
Document Sharing Hub
Full document details: BS EN ISO 1660:2017

When the TEF is embedded in the CAD model, it shall comply with ISO 16792.

5.2.2 Rule B: Type of toleranced feature

The rules for indicating whether the toleranced feature is an integral feature or a derived feature are given in ISO 1101:2017, Clause 6.

When the characteristic symbol in the tolerance indicator is the surface profile symbol, the toleranced feature is an integral or derived surface.

When the characteristic symbol in the tolerance indicator is the line profile symbol, the toleranced feature is either

— the derived feature (see B.15),

— any line in the identified integral or derived surface, in a specified direction (see B.14), or

— one specified line in the identified integral or derived surface.

If the toleranced feature is one identified line in a surface, the location of this line shall be identified by TEDs.

If the toleranced feature is any line in the identified surface in a specified direction, then that direction shall be identified using an intersection plane indicator, see ISO 1101:2017, Clause 13.

5.2.3 Rule C: Definition of the tolerance zone

See Figure 2.

For surface profile characteristics, the tolerance zone is limited by two surfaces enveloping spheres with a diameter equal to the tolerance value, the centres of which are situated on the TEF (see Figure 2), unless otherwise specified, see rules E, F and H.

For line profile characteristics, when the tolerance is constant and not preceded by ⌀, the tolerance zone is limited by two lines enveloping circles with a diameter equal to the tolerance value, the centres of which are situated on the TEF, unless otherwise specified, see rules E, F and H.

For line profile characteristics, when the toleranced feature is a derived line and the tolerance value is preceded by ⌀, the tolerance zone is limited by a tube enveloping spheres with a diameter equal to the tolerance value, the centres of which are situated on the TEF, unless otherwise specified, see rule H.

NOTE See also ISO 1101:2017, 8.2.2.1.1.

© ISO 2017 – All rights reserved

Documents
Document Sharing Hub
Full document details: BS EN ISO 1660:2017

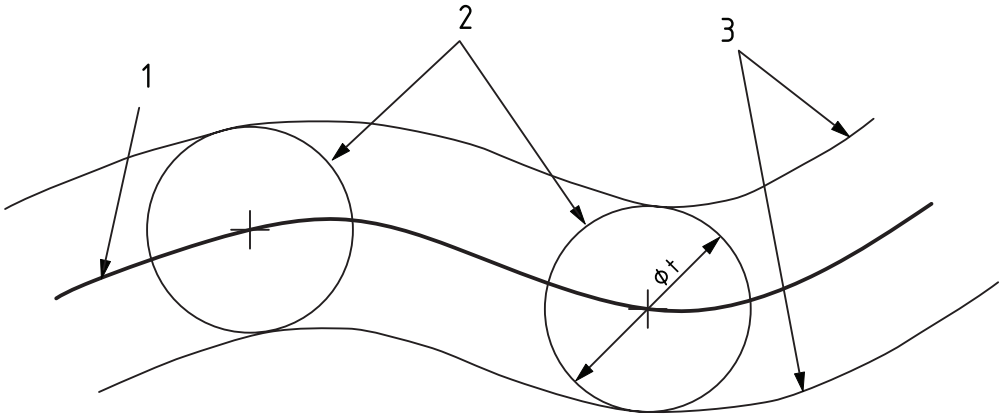

Key

1 TEF

2 two of the infinite number of spheres or circles defining the tolerance zone along the TEF

3 tolerance zone limits

t tolerance value

Figure 2 — Definition of tolerance zone

For line profile characteristics for integral features, the orientation of the intersection plane that contains the tolerance zone may be completely defined by the intersection plane indicator, e.g. when it is specified to be parallel to a datum plane or perpendicular to a datum axis.

In other cases, e.g. when it is specified to be perpendicular to a datum plane or parallel to a datum axis, one orientation angle remains unlocked. In this case, the intersection plane shall be perpendicular to the surface, see Figure 3, if being perpendicular to the surface defines a consistent direction for each line profile.

If being perpendicular to the surface does not define a consistent direction along each line profile, e.g. for complex surfaces that are twisted along the line profile, and the intersection plane has an unlocked orientation angle, a direction feature indicator shall be used to define the second orientation angle of the intersection plane.

© ISO 2017 – All rights reserved
Documents
Document Sharing Hub
Full document details: BS EN ISO 1660:2017

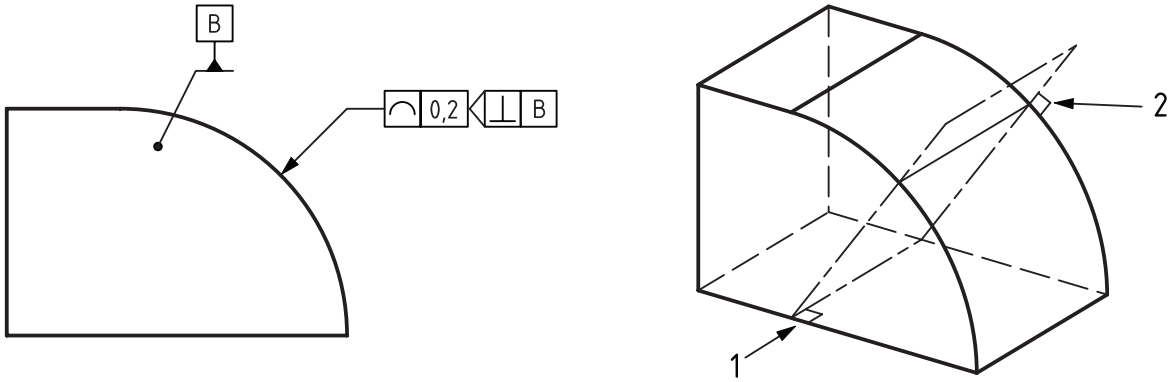

a) Specification

b) Orientation of the intersection plane containing the tolerance zone

Key

1 the intersection plane is perpendicular to datum plane B

2 the intersection plane is locally perpendicular to the toleranced feature

Figure 3 — Orientation of the intersection plane that contains the tolerance zone for line profile characteristics

5.3 Rules for profile tolerancing using additional specification elements

5.3.1 Rule D: Toleranced feature specification elements

If the toleranced feature is not one complete single feature, this shall be indicated by using the tools given in ISO 1101, e.g. the SZ, CZ, UF, “all over”, “all around” and “between” specification elements, or by query of the CAD model (see B.5, NOTE 2). To avoid ambiguities, the “all over” and “all around” specification elements shall always be used together with either the SZ, CZ or UF specification element for geometrical specifications, unless all the non-redundant degrees of freedom of the tolerance zones are locked by a datum system.

The SZ, separate zones, modifier considers the set of single features as separate features, with unrelated tolerance zones. Since there are a number of toleranced features, there are an equal number of specified characteristics.

The CZ, combined zone, modifier considers the set of single features as separate features, but combines the tolerance zones. Since it builds a collection of toleranced features, it cannot define a derived feature, if the individual features do not have a derived feature. Therefore, the CZ modifier is appropriate to use when the toleranced features function separately, but with a relation between them. The CZ modifier defines only one specified characteristic.

The UF, united feature, modifier builds one compound feature out of several single features. This compound feature may have a derived feature, even when the individual features do not. Therefore, the UF modifier is appropriate to use when the function(s) is related to the integral compound feature considered as one feature, or to its derived feature.

A specification for a united feature or its derived feature creates one tolerance zone for that compound feature or derived feature. Since there is only one compound feature, there is only one specified characteristic.

In the case of profile tolerancing of integral features, the practical difference between UF and CZ is small and limited to the shape of the tolerance zone in transitions between features.

© ISO 2017 – All rights reserved

Documents
Document Sharing Hub
Full document details: BS EN ISO 1660:2017

5.3.2 Rule E: Unequally disposed tolerance zone

If, for integral features, the tolerance zone is not equally disposed according to rule C, the UZ specification element shall be used. The rules are given in ISO 1101:2017, 8.2.2.1.3.

5.3.3 Rule F: Linear tolerance zone offset

If the tolerance zone is allowed to be offset from the TEF by a consistent, but unspecified amount, the OZ specification element shall be indicated in the tolerance indicator. The rules are given in ISO 1101:2017, 8.2.2.1.4.1.

In the case of a feature of linear size, when a tolerance zone shall not take the nominal size into account, the OZ modifier shall be indicated, see Figure 4 a). If the shape of the TEF is defined, but the nominal linear size of the TEF is undefined, the OZ modifier shall always be indicated, see Figure 4 b).

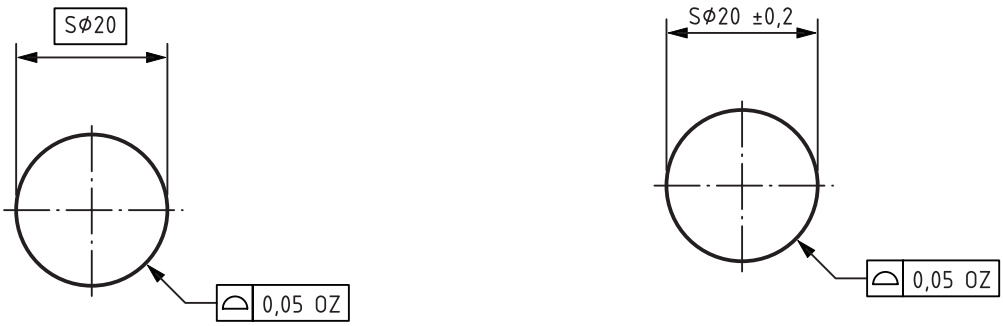

a) Surface profile specification for a sphere of defined nominal size, given by a TED with OZ indication

b) Surface profile specification for a sphere of undefined nominal size with OZ indication

NOTE The diameter of the median surface of the tolerance zone is variable.

Figure 4 — Surface profile specifications features of linear size with OZ modifier

NOTE Because there are no bounds on the offset, a specification with the OZ modifier, such as the one in Figure 4 a) and b), is usually combined with a specification using a larger tolerance without the OZ modifier, such as the one in Figure 1. When both tolerances are satisfied, this combination controls the shape of the tolerance feature within the larger, fixed tolerance zone.

5.3.4 Rule G: Angular tolerance zone offset

In the case of a feature of angular size, when a tolerance zone shall not take the nominal size into account, the VA modifier (variable angular size) shall be indicated. If the shape of the TEF is defined, but the nominal angular size of the TEF is undefined, the VA modifier shall always be indicated. The rules are given in ISO 1101:2017, 8.2.2.1.4.2.

5.3.5 Rule H: Variable tolerance zone width

If the tolerance zone width is variable, this shall be indicated using the tools given in ISO 1101:2017, 8.2.2.1.1.

5.3.6 Rule I: Filtered feature specification elements

If the specification applies to an extracted feature with a specified filtering applied, this shall be indicated using the tools given in ISO 1101:2017, 8.2.2.2.1.

© ISO 2017 – All rights reserved
Documents
Document Sharing Hub
Full document details: BS EN ISO 1660:2017