BS EN ISO 16773-2:2016

BSI Standards Publication

Electrochemical impedance spectroscopy (EIS) on coated and uncoated metallic specimens

Part 2: Collection of data

Documents
Document Sharing Hub

Full document details: BS EN ISO 16773-2:2016

National foreword

This British Standard is the UK implementation of EN ISO 16773-2:2016. It supersedes BS EN ISO 16773-2:2007 which is withdrawn.

The UK participation in its preparation was entrusted to Technical Committee STI/10, Test methods for paints.

A list of organizations represented on this committee can be obtained on request to its secretary.

This publication does not purport to include all the necessary provisions of a contract. Users are responsible for its correct application.

© The British Standards Institution 2016.
Published by BSI Standards Limited 2016

ISBN 978 0 580 85634 1

ICS 87.040

Compliance with a British Standard cannot confer immunity from legal obligations.

This British Standard was published under the authority of the Standards Policy and Strategy Committee on 30 April 2016.

Amendments/corrigenda issued since publication

Date	Text affected

Documents
Document Sharing Hub

Full document details: BS EN ISO 16773-2:2016

EUROPEAN STANDARD

NORME EUROPÉENNE

EUROPÄISCHE NORM

EN ISO 16773-2

April 2016

ICS 87.040

Supersedes EN ISO 16773-2:2007

English Version

Electrochemical impedance spectroscopy (EIS) on coated and uncoated metallic specimens - Part 2: Collection of data (ISO 16773-2:2016)

Spectroscopie d'impédance électrochimique (SIE) sur des éprouvettes métalliques revêtues et non revêtues - Partie 2: Recueil des données (ISO 16773-2:2016)

Elektrochemische Impedanzspektroskopie (EIS) an beschichteten und unbeschichteten metallischen Proben - Teil 2: Datenerfassung (ISO 16773-2:2016)

This European Standard was approved by CEN on 11 March 2016.

CEN members are bound to comply with the CEN/CENELEC Internal Regulations which stipulate the conditions for giving this European Standard the status of a national standard without any alteration. Up-to-date lists and bibliographical references concerning such national standards may be obtained on application to the CEN-CENELEC Management Centre or to any CEN member.

This European Standard exists in three official versions (English, French, German). A version in any other language made by translation under the responsibility of a CEN member into its own language and notified to the CEN-CENELEC Management Centre has the same status as the official versions.

CEN members are the national standards bodies of Austria, Belgium, Bulgaria, Croatia, Cyprus, Czech Republic, Denmark, Estonia, Finland, Former Yugoslav Republic of Macedonia, France, Germany, Greece, Hungary, Iceland, Ireland, Italy, Latvia, Lithuania, Luxembourg, Malta, Netherlands, Norway, Poland, Portugal, Romania, Slovakia, Slovenia, Spain, Sweden, Switzerland, Turkey and United Kingdom.

EUROPEAN COMMITTEE FOR STANDARDIZATION
COMITÉ EUROPÉEN DE NORMALISATION
EUROPÄISCHES KOMITEE FÜR NORMUNG

CEN-CENELEC Management Centre: Avenue Marnix 17, B-1000 Brussels

© 2016 CEN All rights of exploitation in any form and by any means reserved worldwide for CEN national Members.

Ref. No. EN ISO 16773-2:2016 E

Documents
Document Sharing Hub

Full document details: BS EN ISO 16773-2:2016

European foreword

This document (EN ISO 16773-2:2016) has been prepared by Technical Committee ISO/TC 35 “Paints and varnishes” in collaboration with Technical Committee CEN/TC 139 “Paints and varnishes” the secretariat of which is held by DIN.

This European Standard shall be given the status of a national standard, either by publication of an identical text or by endorsement, at the latest by October 2016, and conflicting national standards shall be withdrawn at the latest by October 2016.

Attention is drawn to the possibility that some of the elements of this document may be the subject of patent rights. CEN [and/or CENELEC] shall not be held responsible for identifying any or all such patent rights.

This document supersedes EN ISO 16773-2:2007.

According to the CEN-CENELEC Internal Regulations, the national standards organizations of the following countries are bound to implement this European Standard: Austria, Belgium, Bulgaria, Croatia, Cyprus, Czech Republic, Denmark, Estonia, Finland, Former Yugoslav Republic of Macedonia, France, Germany, Greece, Hungary, Iceland, Ireland, Italy, Latvia, Lithuania, Luxembourg, Malta, Netherlands, Norway, Poland, Portugal, Romania, Slovakia, Slovenia, Spain, Sweden, Switzerland, Turkey and the United Kingdom.

Endorsement notice

The text of ISO 16773-2:2016 has been approved by CEN as EN ISO 16773-2:2016 without any modification.

Documents
Document Sharing Hub

Full document details: BS EN ISO 16773-2:2016

Contents

Page

Foreword ... **iv**

1 Scope ... **1**

2 Normative references ... **1**

3 Terms and definitions ... **1**

4 Principle ... **1**

5 Electrochemical cell ... **2**
5.1 General ... 2
5.2 Electrodes ... 3
5.3 Exposed area ... 3
5.4 Electrolyte ... 3

6 Procedure ... **4**
6.1 Grounding ... 4
6.2 Shielding ... 4
6.3 Cell cable ground contacts ... 4
6.4 Local conditions ... 4
6.5 Measurement equipment characteristics ... 5
6.6 Confidence test ... 5
6.6.1 General ... 5
6.6.2 Use of interlaboratory test cells for confidence test ... 6
6.6.3 Error estimate and accuracy ... 6
6.7 Specimens ... 6
6.7.1 Preconditioning of specimens ... 6
6.7.2 Environmental control ... 6
6.8 Evaluation of laboratory and field coating specimens ... 6
6.9 Number of specimens and repeatability of results ... 7

7 Instrumental parameters ... **7**
7.1 General ... 7
7.2 Conditioning potential and conditioning time ... 8
7.3 Frequency spectrum ... 8
7.4 Data point spacing and points per decade ... 8
7.5 D.C. potential control ... 8
7.6 Amplitude of perturbation ... 9
7.7 Current range settings ... 9
7.8 Data averaging settings ... 9

8 Data presentation ... **9**
8.1 General ... 9
8.2 Bode plot ... 9
8.3 Nyquist plot ... 10

9 Exchange file format ... **11**

10 Test report ... **11**

Annex A (informative) **Determination of maximum measurable impedance with the open-lead test** ... **13**

Annex B (normative) **Data exchange file format** ... **15**

Annex C (informative) **Considerations about the precise determination of the exposed area** ... **19**

Bibliography ... **24**

© ISO 2016 – All rights reserved

Documents
Document Sharing Hub
Full document details: BS EN ISO 16773-2:2016

Foreword

ISO (the International Organization for Standardization) is a worldwide federation of national standards bodies (ISO member bodies). The work of preparing International Standards is normally carried out through ISO technical committees. Each member body interested in a subject for which a technical committee has been established has the right to be represented on that committee. International organizations, governmental and non-governmental, in liaison with ISO, also take part in the work. ISO collaborates closely with the International Electrotechnical Commission (IEC) on all matters of electrotechnical standardization.

The procedures used to develop this document and those intended for its further maintenance are described in the ISO/IEC Directives, Part 1. In particular the different approval criteria needed for the different types of ISO documents should be noted. This document was drafted in accordance with the editorial rules of the ISO/IEC Directives, Part 2 (see www.iso.org/directives).

Attention is drawn to the possibility that some of the elements of this document may be the subject of patent rights. ISO shall not be held responsible for identifying any or all such patent rights. Details of any patent rights identified during the development of the document will be in the Introduction and/or on the ISO list of patent declarations received (see www.iso.org/patents).

Any trade name used in this document is information given for the convenience of users and does not constitute an endorsement.

For an explanation on the meaning of ISO specific terms and expressions related to conformity assessment, as well as information about ISO's adherence to the WTO principles in the Technical Barriers to Trade (TBT) see the following URL: Foreword - Supplementary information

The committee responsible for this document is ISO/TC 35, *Paints and varnishes*, Subcommittee SC 9, *General test methods for paints and varnishes*.

This second edition cancels and replaces the first edition (ISO 16773-2:2007), which has been technically revised. The main changes are the following:

a) the introductory element of the title, *Paints and varnishes*, has been omitted, because the scope is broadened to include metals and alloys and the main element of the title has been changed to: *Electrochemical impedance spectroscopy (EIS) on coated and uncoated metallic specimens*;

b) a reference to ISO/TR 16208 has been added;

c) considerations about the precise determination of the exposed area have been added as an informative annex;

d) a test report has been added.

ISO 16773 consists of the following parts, under the general title *Electrochemical impedance spectroscopy (EIS) on coated and uncoated metallic specimens*:

— *Part 1: Terms and definitions*

— *Part 2: Collection of data*

— *Part 3: Processing and analysis of data from dummy cells*

— *Part 4: Examples of spectra of polymer-coated and uncoated specimens*

© ISO 2016 – All rights reserved
Documents
Document Sharing Hub
Full document details: BS EN ISO 16773-2:2016

INTERNATIONAL STANDARD ISO 16773-2:2016(E)

Electrochemical impedance spectroscopy (EIS) on coated and uncoated metallic specimens —

Part 2: Collection of data

1 Scope

This part of ISO 16773 gives guidelines for optimizing the collection of EIS data with focus on high-impedance systems. High impedance in the context of intact coatings refers to systems with an impedance greater than 10^9 Ω·cm^2. This does not preclude measurements on systems with lower impedance. For uncoated samples extra information can be found in ISO/TR 16208.

This part of ISO 16773 deals with the following:

— instrumental set-up: requirements and pit-falls;

— data validation: checking the measurement range and the accuracy of the data;

— performing an EIS measurement: specimen considerations and instrumental parameters;

— the experimental results: different methods of presenting EIS data.

These guidelines are intended to ensure the acquisition of EIS data that can be used to study the performance of the specimen. This part of ISO 16773 does not give guidelines for the interpretation of the data.

2 Normative references

The following documents, in whole or in part, are normatively referenced in this document and are indispensable for its application. For dated references, only the edition cited applies. For undated references, the latest edition of the referenced document (including any amendments) applies.

ISO 16773-1, *Electrochemical impedance spectroscopy (EIS) on coated and uncoated metallic specimens — Part 1: Terms and definitions*

3 Terms and definitions

For the purposes of this document, the terms and definitions given in ISO 16773-1 apply.

4 Principle

A so-called “confidence” test is described in order to check the suitability of the entire set-up and recommendations are given as to how to perform EIS experiments. For convenience, only potentiostatically controlled EIS measurements are described, although it is also possible to make EIS measurements under galvanostatic control.

A potentiostat is connected either to a dummy cell or to an electrochemical cell (with working, counter- and reference electrodes). A single-sinusoidal- or multi-sinusoidal-waveform potential, either in conjunction with a d.c. offset or not, is applied by the potentiostat to the dummy cell or to the electrochemical cell, and the resulting a.c. current is measured. Both potential and a.c. current data are collected and analysed for amplitude and phase shift. This can be done in a variety of ways, depending

© ISO 2016 – All rights reserved

AVA Documents Document Sharing Hub

Full document details: BS EN ISO 16773-2:2016

on the type of equipment used. All data are presented and compared graphically or computed for equivalent circuits. In the case of the dummy cell, the values of these equivalent components are compared to the actual cell components connected to the potentiostat and evaluated for coherence.

5 Electrochemical cell

5.1 General

NOTE 1 Various types of measurement cell exist which are suitable for use with this part of ISO 16773. Most commonly used are two-electrode and three-electrode arrangements for measurements in an aqueous electrolyte.

The cell shall be constructed of materials that will not corrode, otherwise deteriorate or contaminate the solution (e.g. PMMA, PTFE or glass). A material compatibility test should be carried out.

The cell shall be leak-proof to ensure that the geometrical surface of the specimen does not change with time. Use an electrically insulating gasket material (O-ring, etc.) for the seal, i.e. with a through-thickness resistance much greater than that of the coating.

The cell should preferably be designed to allow the following items to be inserted into the electrolyte chamber: the working electrode, the reference electrode, the counter-electrode, a thermometer (for temperature control) and gas inlet/outlet tubes to modify the oxygen content of the electrolyte. When using an inert gas, a gas scrubber should be used.

An example of an electrochemical cell is shown in Figure 1.

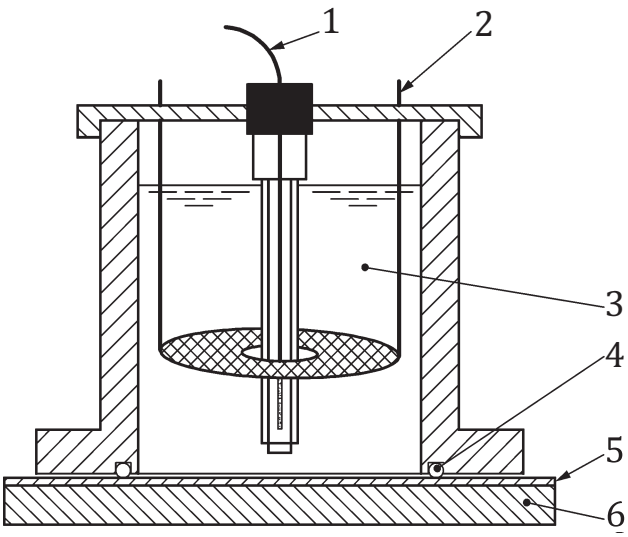

Key

1 reference electrode
2 counter electrode
3 electrolyte
4 O-ring
5 coating
6 working electrode

Figure 1 — Example of an electrochemical cell

NOTE 2 Other designs can be suitable.

For uncoated metallic specimens, IR drop should be considered.

© ISO 2016 – All rights reserved
Documents
Document Sharing Hub
Full document details: BS EN ISO 16773-2:2016

The components shown in Figure 1 are described in 5.2 to 5.4.

5.2 Electrodes

To perform EIS in aqueous solution, the more conventional set-up is composed of a three-electrode arrangement: a working electrode, a reference electrode and a counter-electrode.

Working electrode: A conductive substrate covered by the coating to be investigated. A large surface area is preferred to better take into account any defects and to decrease the impedance of the system to give a better signal-to-noise ratio.

Counter electrode: Inert material such as platinum with a large surface area oriented parallel to the working electrode in order to ensure a homogeneous current distribution.

Reference electrode: A low-impedance and low-noise reference electrode is recommended, according to supplier's user manual [when testing organic coatings, a salt bridge (e.g. Luggin capillary) is not required]. The potential of the reference electrode should be checked periodically to control the accuracy of the electrode and its stability with time. At very high frequencies, the presence of the reference electrode can induce some spurious effects.

NOTE 1 To improve the quality of the high-frequency signal, a platinum wire with a capacitor may be placed in parallel with the reference electrode. The capacitor ensures that the d.c. potential is coming from the reference electrode and a.c. potential from the platinum wire.

NOTE 2 For specific applications, it can be acceptable to use a pseudo-reference electrode consisting of an inert material such as a high-nickel alloy or a chloridized silver wire. Pseudo-reference electrodes are useful for measurements in the field, where a reference electrode can be easily broken.

5.3 Exposed area

The exposed area should be known, constant with time, and should be adequate for the investigation. The larger the exposed area the more sensitive the measurement is to single defects (pores) and the better the signal-to-noise ratio.

If an O-ring is used, the precise exposed area shall be determined under compression (see Annex C for a recommended technique).

NOTE For example, when using an O-ring with a diameter of 1,2 cm and an approximate exposed area of 1,13 cm^2, an error of up 37 % can occur. When using an O-ring with a diameter of 4,7 cm and an approximate exposed area of 18 cm^2, an error of up 8 % can occur.

It is recommended that the user selects the largest possible area without defects. A typical area is in the order of magnitude of 10 cm^2.

5.4 Electrolyte

The resistance of the solution should be low in comparison to the impedance of the investigated system. Different types of electrolyte can be used. Non-aggressive electrolytes can be employed to characterize the properties of the system without introducing corrosion. An aggressive solution may be selected to characterize the corrosion resistance of the system. The electrolyte should be chosen with the end use in mind.

NOTE 1 For the desired end-use, the pH value, the concentration and the composition of the electrolyte might be important parameters.

When the oxygen content is influencing the corrosion, the preconditioning has to be chosen in a way that a steady state is established.

NOTE 2 Purging with oxygen or an inert gas could be necessary to obtain steady state condition.

© ISO 2016 – All rights reserved

Documents
Document Sharing Hub
Full document details: BS EN ISO 16773-2:2016

6 Procedure

6.1 Grounding

An EIS instrument consists of a potentiostat, a computer and a module or instrument specifically required for the impedance measurement.

Electrical grounding considerations between the instruments, the specimen and the environment are important, both for the safety of the operator and the acquisition of as accurate and noise-free EIS data as possible.

a) The safety of the operator is important. The chassis of the EIS instrument should be connected to ground to avoid a potentially lethal electrical shock if the instrument malfunctions. The chassis is normally grounded through the connection to the a.c. mains. Under no circumstances should this connection to ground be bypassed.

b) In most cases, the coated specimen is tested in the laboratory in an electrochemical cell such as that described in 5.1 in which the specimen is electrically isolated from ground, or “floating”. This is the simplest case with no special consideration needed for connection of the instrument to the specimen.

c) If, however, the coated specimen is grounded, then the grounding considerations become more complex. This could happen if EIS is used to test coated structures in a field, such as vessels or pipelines. If the coated specimen is grounded, then the EIS instrument should be electrically isolated from ground to obtain accurate EIS data. This is not a trivial consideration and is generally taken into account during the design of the EIS system. Floating the EIS system by bypassing the protective ground connection to the mains is a safety hazard and is not acceptable.

d) When connecting up the various instruments and computers, it is possible to inadvertently ground a floating instrument through the connection to a grounded instrument. This can give rise to noise through “ground loops” or even result in improper operation.

6.2 Shielding

Shielding is very important for noise considerations in EIS measurements of high-impedance specimens. Proper shielding will ensure that the cell electrodes and cables will not pick up electromagnetic radiation from the surroundings. The electrochemical cell should be placed inside a Faraday cage and the Faraday cage connected to an appropriate ground connection of the potentiostat. If the potentiostat has an externally mounted electrometer, the electrometer should also be put inside the Faraday cage. The manufacturer’s manual should be consulted to ensure proper wiring.

6.3 Cell cable ground contacts

The connections between the cell cables and the cell should be clean and the length of the cables should be as short as possible to minimize stray capacitance.

6.4 Local conditions

The following conditions in the vicinity of the EIS experiment can affect the quality of the measurement.

a) The incoming a.c. power to the EIS instrument can be noisy or exhibit large voltage transients, both of which can result in noise in the electrochemical data. If severe, the user may install an a.c. line conditioner. The raw potential and current data are usually averaged by the EIS instrument and are not as susceptible to line noise as d.c. experiments.

b) Electromagnetic noise from electrical devices (e.g. computer monitors) in the local vicinity of the EIS experiment can also contribute to noise in the experiment. Again, data processing will discriminate against this noise. Instruments or appliances that operate intermittently (e.g. freezers, ovens, ultrasonic cleaners, magnetic stirrers, water baths) are particularly troublesome because

© ISO 2016 – All rights reserved
AVA Documents Document Sharing Hub
Full document details: BS EN ISO 16773-2:2016

they can introduce noise in the electrical circuit when they are activated. These devices should be operated on a different circuit, if possible. Because of the low current levels which are typically observed in EIS experiments on coated specimens, the specimen should always be contained in a Faraday cage that is connected to the appropriate instrument ground.

c) The relative humidity in the environment can also be of concern. If the relative humidity is high, then micro-condensation can occur in the electronics of the EIS instrument, providing a low-impedance leakage path. At the low current levels typically encountered in EIS experiments on coated specimens, this can result in errors in the current measurement.

6.5 Measurement equipment characteristics

An electrochemical cell has impedance values that can range from 1 mΩ to more than 1 TΩ (10^{12} Ω). The measured impedance of coated specimens can range up to 10^{12} Ω.

A specimen with high impedance will exhibit very low current flow during the EIS experiment. Therefore, the instrument used to measure the EIS of coated specimens needs to be capable of measuring these low currents. The test described in 6.6 is useful to make sure an EIS instrument is capable of measuring coated specimens.

All equipment should be able to measure the dummy cell described in 6.6.1.

Sometimes, it might be desirable to perform an open-lead test in order to find the limits of the entire set-up under the given conditions. A method of estimating the maximum measurable impedance with the open-lead test is given in Annex A.

NOTE EIS measurements on high-impedance coatings are not limited to the above-mentioned cell designs.

6.6 Confidence test

6.6.1 General

In order to obtain confidence in the entire experimental set-up, it is recommended that a confidence test be carried out prior to measurements of real specimens. Confidence can be obtained by carrying out reference tests using hard-wired dummy circuits with known values for capacitance and resistance. These values should be in the order of magnitude which can be expected for the actual coated specimen under investigation. As high-impedance coatings easily reach values of several gigaohms, combined with low capacitance of about 100 pF, it is recommended that the circuit in Figure 2 be used as a reference.

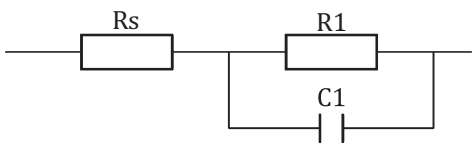

Key

R1 50 GΩ

C1 150 pF

Rs 50 Ω

Figure 2 — Dummy cell for confidence test

© ISO 2016 – All rights reserved

Documents
Document Sharing Hub
Full document details: BS EN ISO 16773-2:2016