BS EN ISO 16811:2025

BSI Standards Publication

Non-destructive testing — Ultrasonic testing — Sensitivity and range setting

Documents
Document Sharing Hub

Full document details: BS EN ISO 16811:2025

National foreword

This British Standard is the UK implementation of EN ISO 16811:2025. It is identical to ISO 16811:2025. It supersedes BS EN ISO 16811:2014, which is withdrawn.

The UK participation in its preparation was entrusted to Technical Committee WEE/46/3, Ultrasonic Testing.

A list of organizations represented on this committee can be obtained on request to its committee manager.

Contractual and legal considerations

This publication has been prepared in good faith, however no representation, warranty, assurance or undertaking (express or implied) is or will be made, and no responsibility or liability is or will be accepted by BSI in relation to the adequacy, accuracy, completeness or reasonableness of this publication. All and any such responsibility and liability is expressly disclaimed to the full extent permitted by the law.

This publication is provided as is, and is to be used at the recipient's own risk.

The recipient is advised to consider seeking professional guidance with respect to its use of this publication.

This publication is not intended to constitute a contract. Users are responsible for its correct application.

© The British Standards Institution 2025
Published by BSI Standards Limited 2025

ISBN 978 0 539 27145 4

ICS 19.100

Compliance with a British Standard cannot confer immunity from legal obligations.

This British Standard was published under the authority of the Standards Policy and Strategy Committee on 31 March 2025.

Amendments/corrigenda issued since publication

Date	Text affected

Documents
Document Sharing Hub

Full document details: BS EN ISO 16811:2025

EUROPEAN STANDARD

NORME EUROPÉENNE

EUROPÄISCHE NORM

EN ISO 16811

March 2025

ICS 19.100

Supersedes EN ISO 16811:2014

English Version

Non-destructive testing - Ultrasonic testing - Sensitivity and range setting (ISO 16811:2025)

Essais non destructifs - Contrôle par ultrasons - Réglage de la sensibilité et de la base de temps (ISO 16811:2025)

Zerstörungsfreie Prüfung - Ultraschallprüfung - Empfindlichkeits- und Entfernungsjustierung (ISO 16811:2025)

This European Standard was approved by CEN on 23 February 2025.

CEN members are bound to comply with the CEN/CENELEC Internal Regulations which stipulate the conditions for giving this European Standard the status of a national standard without any alteration. Up-to-date lists and bibliographical references concerning such national standards may be obtained on application to the CEN-CENELEC Management Centre or to any CEN member.

This European Standard exists in three official versions (English, French, German). A version in any other language made by translation under the responsibility of a CEN member into its own language and notified to the CEN-CENELEC Management Centre has the same status as the official versions.

CEN members are the national standards bodies of Austria, Belgium, Bulgaria, Croatia, Cyprus, Czech Republic, Denmark, Estonia, Finland, France, Germany, Greece, Hungary, Iceland, Ireland, Italy, Latvia, Lithuania, Luxembourg, Malta, Netherlands, Norway, Poland, Portugal, Republic of North Macedonia, Romania, Serbia, Slovakia, Slovenia, Spain, Sweden, Switzerland, Türkiye and United Kingdom.

EUROPEAN COMMITTEE FOR STANDARDIZATION
COMITÉ EUROPÉEN DE NORMALISATION
EUROPÄISCHES KOMITEE FÜR NORMUNG

CEN-CENELEC Management Centre: Rue de la Science 23, B-1040 Brussels

© 2025 CEN All rights of exploitation in any form and by any means reserved worldwide for CEN national Members.

Ref. No. EN ISO 16811:2025 E

Documents
Document Sharing Hub

Full document details: BS EN ISO 16811:2025

European foreword

This document (EN ISO 16811:2025) has been prepared by Technical Committee ISO/TC 135 "Non-destructive testing" in collaboration with Technical Committee CEN/TC 138 “Non-destructive testing” the secretariat of which is held by AFNOR.

This European Standard shall be given the status of a national standard, either by publication of an identical text or by endorsement, at the latest by September 2025, and conflicting national standards shall be withdrawn at the latest by September 2025.

Attention is drawn to the possibility that some of the elements of this document may be the subject of patent rights. CEN shall not be held responsible for identifying any or all such patent rights.

This document supersedes EN ISO 16811:2014.

Any feedback and questions on this document should be directed to the users’ national standards body/national committee. A complete listing of these bodies can be found on the CEN website.

According to the CEN-CENELEC Internal Regulations, the national standards organizations of the following countries are bound to implement this European Standard: Austria, Belgium, Bulgaria, Croatia, Cyprus, Czech Republic, Denmark, Estonia, Finland, France, Germany, Greece, Hungary, Iceland, Ireland, Italy, Latvia, Lithuania, Luxembourg, Malta, Netherlands, Norway, Poland, Portugal, Republic of North Macedonia, Romania, Serbia, Slovakia, Slovenia, Spain, Sweden, Switzerland, Türkiye and the United Kingdom.

Endorsement notice

The text of ISO 16811:2025 has been approved by CEN as EN ISO 16811:2025 without any modification.

Documents
Document Sharing Hub

Full document details: BS EN ISO 16811:2025

Contents

Page

Foreword ... **v**
Introduction ... **vi**
1 Scope ... **1**
2 Normative references ... **1**
3 Terms and definitions ... **1**
4 Quantities and symbols ... **1**
5 Qualification of personnel ... **3**
6 Test equipment ... **3**
6.1 Instrument ... 3
6.2 Probes ... 3
6.2.1 General ... 3
6.2.2 Probe selection ... 3
6.2.3 Frequency and dimensions of transducer ... 4
6.2.4 Dead zone ... 4
6.2.5 Damping ... 4
6.2.6 Focusing probes ... 4
6.3 Coupling media ... 4
6.4 Standard blocks ... 5
6.5 Reference blocks ... 5
6.6 Specific test blocks ... 6
7 Categories of test objects ... **6**
8 Test objects, reference blocks and reference reflectors ... **6**
9 Probes ... **9**
9.1 General ... 9
9.2 Longitudinally curved probes ... 10
9.2.1 Convex scanning surface ... 10
9.2.2 Concave scanning surface ... 10
9.3 Transversely curved probes ... 10
9.3.1 Convex scanning surface ... 10
9.3.2 Concave scanning surface ... 11
10 Determination of probe index point and beam angle ... **11**
10.1 General ... 11
10.2 Flat angle-beam probes ... 11
10.2.1 Calibration block technique ... 11
10.2.2 Reference block technique ... 11
10.3 Angle-beam probes curved longitudinally ... 11
10.3.1 Mechanical determination ... 11
10.3.2 Reference block technique ... 13
10.4 Angle-beam probes curved transversely ... 13
10.4.1 Mechanical determination ... 13
10.4.2 Reference block technique ... 14
10.5 Probes curved in two directions ... 15
10.6 Probes for use on materials other than non-alloy steel ... 15
11 Time base setting ... **15**
11.1 General ... 15
11.2 Reference blocks and reference reflectors ... 16
11.3 Straight-beam probes ... 16
11.3.1 Single-reflector technique ... 16
11.3.2 Multiple-reflector technique ... 16
11.4 Angle-beam probes ... 17

© ISO 2025 – All rights reserved

Documents
Document Sharing Hub
Full document details: BS EN ISO 16811:2025

11.4.1 Radius technique ... 17
11.4.2 Straight-beam probe technique ... 17
11.4.3 Reference block technique ... 17
11.4.4 Contoured probes ... 17
11.5 Alternative range settings for angle-beam probes ... 17
11.5.1 Flat surfaces ... 17
11.5.2 Curved surfaces ... 18

12 Sensitivity setting and echo height evaluation ... 19
12.1 General ... 19
12.2 Angle of incidence ... 20
12.3 Distance-amplitude curve (DAC) technique ... 20
12.3.1 Reference blocks ... 20
12.3.2 Preparation of a distance-amplitude curve ... 21
12.3.3 Evaluation of signals using a distance-amplitude curve ... 22
12.3.4 Evaluation of signals using a reference height ... 22
12.4 Distance-gain-size (DGS) technique ... 23
12.4.1 General ... 23
12.4.2 Reference blocks ... 25
12.4.3 Use of DGS diagrams ... 26
12.4.4 Restrictions on use of the DGS technique due to geometry ... 28
12.5 Transfer correction ... 28
12.5.1 General ... 28
12.5.2 Fixed path length technique ... 29
12.5.3 Comparative technique ... 29
12.5.4 Compensation for local variations in transfer correction ... 30

Annex A (informative) **Determination of sound path distance and angle of incidence in category 2 test objects ... 31**

Annex B (informative) **General DGS diagram ... 36**

Annex C (informative) **Determination of contact transfer correction factors ... 38**

Bibliography ... 41

© ISO 2025 – All rights reserved

Documents
Document Sharing Hub
Full document details: BS EN ISO 16811:2025

Foreword

ISO (the International Organization for Standardization) is a worldwide federation of national standards bodies (ISO member bodies). The work of preparing International Standards is normally carried out through ISO technical committees. Each member body interested in a subject for which a technical committee has been established has the right to be represented on that committee. International organizations, governmental and non-governmental, in liaison with ISO, also take part in the work. ISO collaborates closely with the International Electrotechnical Commission (IEC) on all matters of electrotechnical standardization.

The procedures used to develop this document and those intended for its further maintenance are described in the ISO/IEC Directives, Part 1. In particular, the different approval criteria needed for the different types of ISO document should be noted. This document was drafted in accordance with the editorial rules of the ISO/IEC Directives, Part 2 (see www.iso.org/directives).

ISO draws attention to the possibility that the implementation of this document may involve the use of (a) patent(s). ISO takes no position concerning the evidence, validity or applicability of any claimed patent rights in respect thereof. As of the date of publication of this document, ISO had not received notice of (a) patent(s) which may be required to implement this document. However, implementers are cautioned that this may not represent the latest information, which may be obtained from the patent database available at www.iso.org/patents. ISO shall not be held responsible for identifying any or all such patent rights.

Any trade name used in this document is information given for the convenience of users and does not constitute an endorsement.

For an explanation of the voluntary nature of standards, the meaning of ISO specific terms and expressions related to conformity assessment, as well as information about ISO's adherence to the World Trade Organization (WTO) principles in the Technical Barriers to Trade (TBT), see www.iso.org/iso/foreword.html.

This document was prepared by Technical Committee ISO/TC 135, *Non-destructive testing*, Subcommittee SC 3, *Ultrasonic testing*, in collaboration with the European Committee for Standardization (CEN) Technical Committee CEN/TC 138 *Non-destructive testing,* in accordance with the Agreement on technical cooperation between ISO and CEN (Vienna Agreement).

This second edition cancels and replaces the first edition (ISO 16811:2012), which has been technically revised.

The main changes are as follows:

— normative references have been updated;

— Annex A and Annex B from the prior edition have been moved to the main text;

— document has been editorially revised.

Any feedback or questions on this document should be directed to the user's national standards body. A complete listing of these bodies can be found at www.iso.org/members.html.

© ISO 2025 – All rights reserved

Documents
Document Sharing Hub
Full document details: BS EN ISO 16811:2025

Introduction

The following standards on ultrasonic testing are linked:

— ISO 16810, Non-destructive testing — Ultrasonic testing — General principles;

— ISO 16811, Non-destructive testing — Ultrasonic testing — Sensitivity and range setting;

— ISO 16823, Non-destructive testing — Ultrasonic testing — Through transmission technique;

— ISO 16826, Non-destructive testing — Ultrasonic testing — Testing for discontinuities perpendicular to the surface;

— ISO 16827, Non-destructive testing — Ultrasonic testing — Characterization and sizing of discontinuities;

— ISO 16828, Non-destructive testing — Ultrasonic testing — Time-of-flight diffraction technique as a method for detection and sizing of discontinuities.

© ISO 2025 – All rights reserved

Documents
Document Sharing Hub
Full document details: BS EN ISO 16811:2025

Non-destructive testing — Ultrasonic testing — Sensitivity and range setting

1 Scope

This document specifies the general rules for setting the time-base range and sensitivity (i.e. gain adjustment) of a manually operated ultrasonic instrument with A-scan display in order that reproducible determinations can be made of the location and echo height of a reflector.

This document is applicable to contact techniques employing a single probe with either a single transducer or dual transducers. This document does not apply to the immersion technique and techniques employing more than one probe.

2 Normative references

The following documents are referred to in the text in such a way that some or all of their content constitutes requirements of this document. For dated references, only the edition cited applies. For undated references, the latest edition of the referenced document (including any amendments) applies.

ISO 2400, *Non-destructive testing — Ultrasonic testing — Specification for calibration block No. 1*[1)]

ISO 5577, *Non-destructive testing — Ultrasonic testing — Vocabulary*

ISO 7963, *Non-destructive testing — Ultrasonic testing — Specification for calibration block No. 2*[1)]

ISO 9712, *Non-destructive testing — Qualification and certification of NDT personnel*

ISO 22232-1, *Non-destructive testing — Characterization and verification of ultrasonic test equipment — Part 1: Instruments*

ISO 22232-2, *Non-destructive testing — Characterization and verification of ultrasonic test equipment — Part 2: Probes*

ISO 22232-3, *Non-destructive testing — Characterization and verification of ultrasonic test equipment — Part 3: Combined equipment*

3 Terms and definitions

For the purpose of this document, the terms and definitions given in ISO 5577 apply.

ISO and IEC maintain terminology databases for use in standardization at the following addresses:

— ISO Online browsing platform: available at https://www.iso.org/obp

— IEC Electropedia: available at https://www.electropedia.org/

4 Quantities and symbols

A full list of the quantities and symbols used throughout this document is given in Table 1.

1) In the next revision of the standard, the term "calibration block" is intended to be replaced by the term "standard block".

© ISO 2025 – All rights reserved

Documents
Document Sharing Hub
Full document details: BS EN ISO 16811:2025

Table 1 — Quantities and symbols

Symbol	Quantity	Unit
A	Normalized distance in DGS diagram	
A'	Probe coordinate	mm
a	Projected sound path length	mm
a'	Reduced projected sound path length	mm
α	Beam angle in steel	°
α_r	Beam angle in a non-alloy steel reference block	°
α_d	Incident angle (beam angle in delay block or wedge)	°
α_t	Beam angle in test object	°
β	Angle of incidence	°
c_r	Sound velocity in reference block	m/s
c_t	Velocity of transverse waves in test object	m/s
c_d	Velocity of longitudinal waves in delay block or wedge	m/s
D_{obj}	Outer diameter of test object or curvature of scanning surface	mm
d	Wall thickness	mm
D_{eff}	Effective transducer size	mm
D_f	Equivalent reflector diameter	mm
D_{SSH}	Diameter of spherical-shaped reflector	mm
D_{DSR}	Diameter of disc-shaped reflector	mm
D_{ps}	Diameter of probe shoe	mm
D_{SDH}	Diameter of side-drilled hole	mm
e_1 to e_7	Reference block dimensions	mm
g	Depth of contour on probe contact surface	mm
G	Normalized diameter of disc-shaped reflector in DGS-Diagram	
λ	Wavelength	mm
ΔH_u	Difference between the echo height from a reference reflector and the echo height from a discontinuity	dB
l_{ps}	Length of probe shoe	mm
l_d	Length of delay path	mm
Δl_{ps}	Length of contoured probe face	mm
N_{eff}	Effective near field length	mm
P_r	Reference point at s_{max}	
P_j	Reference point at s_j	
q	Coordinate of reflector	mm
s	Sound path length (single trip)	mm
s_d	Equivalent sound path distance in the delay block	
s_j	Sound path length of reference reflector	mm
s_{max}	Maximum sound path length	mm
s_u	Sound path length associated with evaluated signal	mm
s_v	Acoustic equivalent to delay path in test object	mm
t	Depth coordinate of reflector	mm
V	Gain in DGS diagram	dB
V_j	Basic gain	dB
V_r	Recording gain	dB
V_t	Gain for determining ΔV_t	dB

© ISO 2025 – All rights reserved

Documents
Document Sharing Hub
Full document details: BS EN ISO 16811:2025

Table 1 *(continued)*

Symbol	Quantity	Unit
V_u	Indication gain	dB
ΔV	Gain difference	dB
$\Delta V_\sim$	Correction for ΔV_t	dB
ΔV_k	Gain correction for cylindrical reflector surface	dB
ΔV_s	Gain difference associated with sound path length	dB
ΔV_t	Transfer correction (average)	dB
$V_{t,r}$	Gain for back wall echo on reference block	dB
$V_{t,t}$	Gain for back wall echo on test object	dB
ΔV_u	Difference between indication gain and recording gain	dB
w_{ps}	Width of probe shoe	mm
Δw_{ps}	Width of contouring of the probe face	mm
x	Distance between probe index point and front edge of probe, for an uncontoured probe	mm
Δx	Probe index shift	mm

5 Qualification of personnel

a) The testing shall be performed by personnel qualified in accordance with ISO 9712.

b) The requirements for qualification of test personnel shall be specified in the product standards and/or other applicable documents.

6 Test equipment

6.1 Instrument

The ultrasonic instrument shall fulfil the requirements of ISO 22232-1.

6.2 Probes

6.2.1 General

The probe(s) shall initially fulfil the requirements of ISO 22232-2.

6.2.2 Probe selection

The choice of the probe depends on the purpose of the testing and the requirements of the referencing standard or specification. It depends on:

— the material thickness, shape and surface condition of the test object;

— the type and metallurgical condition of the material to be tested;

— the type, position and orientation of discontinuities to be detected and assessed.

The probe parameters listed in 6.2.3, 6.2.4 and 6.2.5 shall be considered in relation to the characteristics of the test object stated above.

© ISO 2025 – All rights reserved

Documents
Document Sharing Hub
Full document details: BS EN ISO 16811:2025

6.2.3 Frequency and dimensions of transducer

The frequency and dimensions of a transducer determine the shape of the sound beam (near field and beam divergence).

a) The selection shall assure that the characteristics of the beam are the optimum for the testing by a compromise between the following:

   1) the near-field length which shall remain, whenever possible, smaller than the thickness of the test object.

      NOTE It is possible to detect discontinuities in the near field, but their characterization is less accurate and less reproducible than in the far field.

   2) the beam width, which shall be sufficiently small within the test volume furthest from the probe to maintain an adequate detection level;

   3) the beam divergence, which shall be sufficiently large to detect planar discontinuities that are unfavourably orientated.

b) Apart from the above considerations, the selection of frequency shall take into account the influence of the sound attenuation in the material and the reflectivity of discontinuities.

The higher the frequency, the greater the test resolution, but the sound waves are more attenuated (or the spurious signals due to the structure are greater) than with lower frequencies.

The choice of frequency thus represents a compromise between these two factors.

Most ultrasonic tests are performed at frequencies between 1 MHz and 10 MHz.

6.2.4 Dead zone

The choice of the probe shall take into account the influence of the dead zone in relation to the test volume.

6.2.5 Damping

The probe selection shall also include consideration of the damping which influences the axial resolution as well as the frequency spectrum.

6.2.6 Focusing probes

Focusing probes are mainly used for the detection of small discontinuities and for sizing reflectors.

Their advantages in relation to non-focused single-transducer probes are an increased lateral resolution and a higher signal-to-noise ratio than with non-focussing probes.

a) Their sound beams shall be described by the focal distance, the focal zone and the width of the focal zone.

b) The sensitivity setting shall be carried out by using reference reflectors.

6.3 Coupling media

a) Different coupling media can be used, but their type shall be compatible with the materials to be tested. Examples are:

   — water, possibly containing an agent, e.g. wetting, anti-freeze, corrosion inhibitor;

   — contact paste;

   — oil;

   — grease;

© ISO 2025 – All rights reserved

Documents
Document Sharing Hub
Full document details: BS EN ISO 16811:2025

— cellulosic paste containing water

b) The characteristics of the coupling medium shall remain constant throughout the verification, the setting operations and the testing.

c) If the constancy of the characteristics cannot be guaranteed between setting and testing, a transfer correction may be applied.

One method for determining the necessary correction is described in 12.5.

d) The coupling medium shall be suitable for the temperature range in which it will be used.

e) After testing is completed, the coupling medium shall be removed if its presence will adversely affect subsequent operations or use of the test object.

6.4 Standard blocks

The blocks used for setting up the ultrasonic test equipment shall be in accordance with those specified in ISO 2400 and ISO 7963.

The stability of test equipment and setting can be verified by using the blocks given in ISO 2400 and ISO 7963.

6.5 Reference blocks

a) When amplitudes of echoes from the test object are compared with echoes from a reference block, certain requirements relating to the material, surface condition, geometry and temperature of the block shall be observed.

b) Where possible, the reference blocks shall be made from a material with acoustic properties which are within a specified range with respect to the material to be tested and shall have a surface condition comparable to that of the test object.

c) If these characteristics are not the same, a transfer correction shall be applied.

A method for determining the necessary correction is described in 12.5.

d) The geometrical conditions of the reference blocks and the test object shall be considered.

For further details, see Clause 8.

e) The geometry of the reference blocks, its dimensions, and the position of any reflectors, shall be indicated on a case by case basis in the specific standards and specifications.

f) The position and number of reflectors shall relate to the scanning of the entire test volume.

g) The most commonly used reflectors are:

1) large planar reflectors, compared to the beam width, perpendicular to the beam axis (e.g. back wall);

2) flat-bottomed holes;

3) side-drilled holes;

4) grooves or notches of various cross-sections

h) When reference blocks are submerged, e.g. for immersion testing, the influence of water in the holes shall be considered or the ends of the holes shall be plugged.

i) The consequences of temperature differences between test object, probes, and reference blocks shall be considered and compared to the requirements for the accuracy of the test.

j) If necessary, the reference blocks shall be maintained within the specified temperature range during the testing.

© ISO 2025 – All rights reserved

Documents
Document Sharing Hub
Full document details: BS EN ISO 16811:2025

6.6 Specific test blocks

In certain cases, specific blocks, e.g. with identified natural discontinuities, can be used to optimise the test technique and to check the stability of the test sensitivity.

7 Categories of test objects

The requirements for range and sensitivity setting will depend on the geometrical form of the test object.

Five categories of test objects are specified in Table 2.

Table 2 — Categories of test objects

Category	Feature	Section in *x*-direction	Section in *y*-direction
1	Plane parallel surfaces (e.g. plate/sheet)	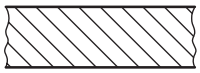	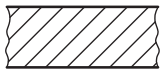
2	Parallel, uniaxially curved surfaces (e.g. tubes)	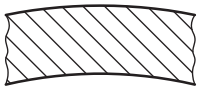	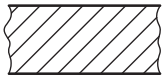
3	Parallel surfaces curved in more than one direction (e.g. dished ends)	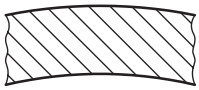	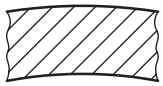
4	Solid material of circular cross section (e.g. rods and bars)	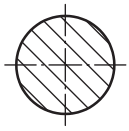	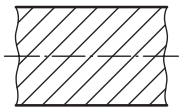
5	Complex shapes (e.g. nozzles, sockets)	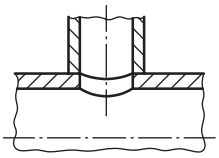	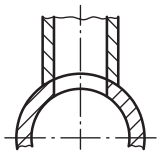

8 Test objects, reference blocks and reference reflectors

Requirements for geometrical features of test objects, reference blocks and reference reflectors in general are contained in Table 3 and Table 4.

© ISO 2025 – All rights reserved

Documents
Document Sharing Hub
Full document details: BS EN ISO 16811:2025

Table 3 — Reference blocks — Requirements for scanning surface, wall thickness and reflectors

Requirements when using back-wall echoes		
Straight-beam probe	Angle-beam probe	Condition
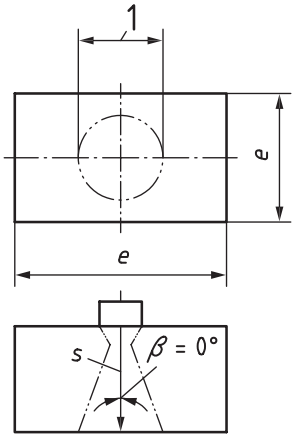 **Key** 1 sound beam diameter	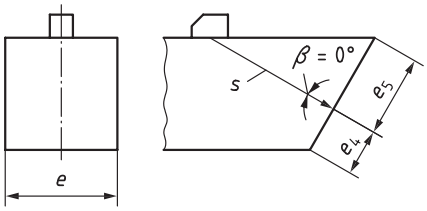	$e > \frac{2\lambda s}{D_{\text{eff}}}$ $e_4, e_5 > \frac{\lambda s}{D_{\text{eff}}}$
Requirements when using side-drilled holes		
Straight-beam probe	Angle-beam probe	Condition
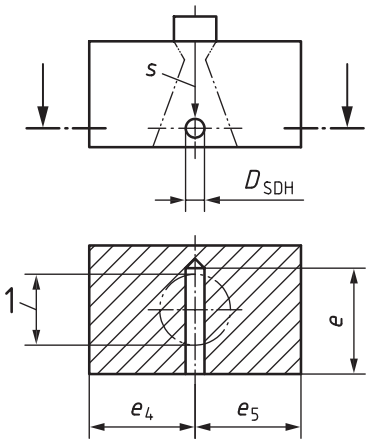	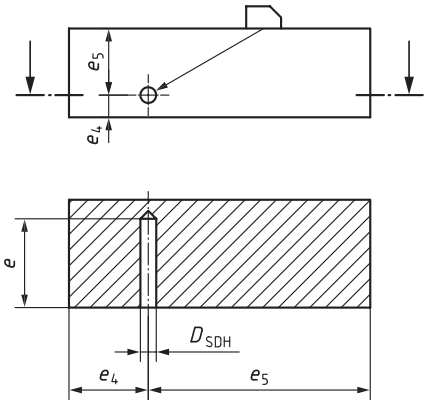	$D_{\text{SDH}} \geq 1{,}5\lambda$ $e > \frac{2\lambda s}{D_{\text{eff}}}$ $e_4, e_5 > \frac{\lambda s}{D_{\text{eff}}}$ $s > 1{,}5 N_{\text{eff}}$
Requirements when using disc-shaped reflectors		
Straight-beam probe	Angle-beam probe	Condition
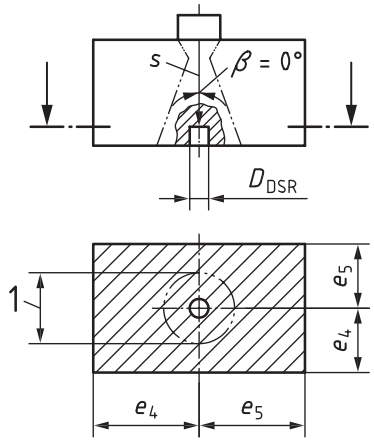 **Key** 1 sound beam diameter	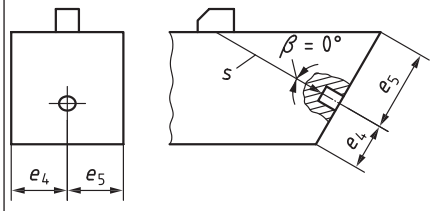	$D_{\text{DSR}} < \frac{\lambda s}{D_{\text{eff}}}$ $e_4, e_5 > \frac{\lambda s}{D_{\text{eff}}}$ $s > 0{,}7 N_{\text{eff}}$

© ISO 2025 – All rights reserved

Documents
Document Sharing Hub
Full document details: BS EN ISO 16811:2025