BS EN ISO 16827:2014

BSI Standards Publication

Non-destructive testing — Ultrasonic testing — Characterization and sizing of discontinuities (ISO 16827:2012)

bsi.

...making excellence a habit.™

Document Sharing Hub

National foreword

This British Standard is the UK implementation of EN ISO 16827:2014. It is identical to ISO 16827:2012. It supersedes BS EN 583-5:2001 which is withdrawn.

The UK participation in its preparation was entrusted to Technical Committee WEE/46, Non-destructive testing.

A list of organizations represented on this committee can be obtained on request to its secretary.

This publication does not purport to include all the necessary provisions of a contract. Users are responsible for its correct application.

© The British Standards Institution 2014. Published by BSI Standards Limited 2014

ISBN 978 0 580 82683 2

ICS 19.100

Compliance with a British Standard cannot confer immunity from legal obligations.

This British Standard was published under the authority of the Standards Policy and Strategy Committee on 31 March 2014.

Amendments issued since publication

Date	Text affected

Documents
Document Sharing Hub

Full document details: BS EN ISO 16827:2014

EUROPEAN STANDARD

NORME EUROPÉENNE

EUROPÄISCHE NORM

EN ISO 16827

March 2014

ICS 19.100

Supersedes EN 583-5:2000

English Version

Non-destructive testing - Ultrasonic testing - Characterization and sizing of discontinuities (ISO 16827:2012)

Essais non destructifs - Contrôle par ultrasons - Caractérisation et dimensionnement des discontinuités (ISO 16827:2012)

Zerstörungsfreie Prüfung - Ultraschallprüfung - Beschreibung und Größenbestimmung von Inhomogenitäten (ISO 16827:2012)

This European Standard was approved by CEN on 9 February 2014.

CEN members are bound to comply with the CEN/CENELEC Internal Regulations which stipulate the conditions for giving this European Standard the status of a national standard without any alteration. Up-to-date lists and bibliographical references concerning such national standards may be obtained on application to the CEN-CENELEC Management Centre or to any CEN member.

This European Standard exists in three official versions (English, French, German). A version in any other language made by translation under the responsibility of a CEN member into its own language and notified to the CEN-CENELEC Management Centre has the same status as the official versions.

CEN members are the national standards bodies of Austria, Belgium, Bulgaria, Croatia, Cyprus, Czech Republic, Denmark, Estonia, Finland, Former Yugoslav Republic of Macedonia, France, Germany, Greece, Hungary, Iceland, Ireland, Italy, Latvia, Lithuania, Luxembourg, Malta, Netherlands, Norway, Poland, Portugal, Romania, Slovakia, Slovenia, Spain, Sweden, Switzerland, Turkey and United Kingdom.

EUROPEAN COMMITTEE FOR STANDARDIZATION
COMITÉ EUROPÉEN DE NORMALISATION
EUROPÄISCHES KOMITEE FÜR NORMUNG

CEN-CENELEC Management Centre: Avenue Marnix 17, B-1000 Brussels

© 2014 CEN All rights of exploitation in any form and by any means reserved worldwide for CEN national Members.

Ref. No. EN ISO 16827:2014 E

Documents
Document Sharing Hub

Full document details: BS EN ISO 16827:2014

Foreword

The text of ISO 16827:2012 has been prepared by Technical Committee ISO/TC 135 “Non-destructive testing” of the International Organization for Standardization (ISO) and has been taken over as EN ISO 16827:2014 by Technical Committee CEN/TC 138 “Non-destructive testing” the secretariat of which is held by AFNOR.

This European Standard shall be given the status of a national standard, either by publication of an identical text or by endorsement, at the latest by September 2014, and conflicting national standards shall be withdrawn at the latest by September 2014.

Attention is drawn to the possibility that some of the elements of this document may be the subject of patent rights. CEN [and/or CENELEC] shall not be held responsible for identifying any or all such patent rights.

This document supersedes EN 583-5:2000.

According to the CEN-CENELEC Internal Regulations, the national standards organizations of the following countries are bound to implement this European Standard: Austria, Belgium, Bulgaria, Croatia, Cyprus, Czech Republic, Denmark, Estonia, Finland, Former Yugoslav Republic of Macedonia, France, Germany, Greece, Hungary, Iceland, Ireland, Italy, Latvia, Lithuania, Luxembourg, Malta, Netherlands, Norway, Poland, Portugal, Romania, Slovakia, Slovenia, Spain, Sweden, Switzerland, Turkey and the United Kingdom.

Endorsement notice

The text of ISO 16827:2012 has been approved by CEN as EN ISO 16827:2014 without any modification.

Documents
Document Sharing Hub

Full document details: BS EN ISO 16827:2014

Contents

Page

Foreword v

Introduction vi

1 Scope 1

2 Normative references 1

3 Principles of characterization of discontinuities 1
3.1 General 1
3.2 Requirements for surface condition 2

4 Pulse echo techniques 2
4.1 General 2
4.2 Location of discontinuity 2
4.3 Orientation of discontinuity 2
4.4 Assessment of multiple indications 3
4.5 Shape of discontinuity 3
4.5.1 Simple classification 3
4.5.2 Detailed classification of shape 4
4.6 Maximum echo height of indication 4
4.7 Size of discontinuity 4
4.7.1 General 4
4.7.2 Maximum echo height techniques 4
4.7.3 Probe movement sizing techniques 5
4.7.4 Selection of sizing techniques 5
4.7.5 Sizing techniques with focussing ultrasonic probes 6
4.7.6 Use of mathematical algorithms for sizing 6
4.7.7 Special sizing techniques 6

5 Transmission technique 7
5.1 General 7
5.2 Location of discontinuity 7
5.3 Evaluation of multiple discontinuities 7
5.4 Reduction of signal amplitude 8
5.5 Sizing of discontinuity 8

Annex A (normative) **Analysis of multiple indications** 12
A.1 Lateral characterisation 12
A.2 Transverse (Through-thickness) characterisation 12
A.3 Shadow technique 12

Annex B (normative) **Techniques for the classification of discontinuity shape** 14
B.1 Simple classification 14
B.1.1 General 14
B.1.2 Reconstruction technique 14
B.1.3 Echo envelope technique 14
B.2 Detailed classification 14
B.2.1 General 14
B.2.2 Echodynamic pattern technique 15
B.2.3 Directional reflectivity 17
B.3 Combination of data 17

Annex C (informative) **Maximum echo height sizing technique** 25
C.1 Distance-gain-size (DGS) technique 25
C.1.1 Principle 25
C.1.2 Applications and limitations 25
C.2 Distance-amplitude-correction (DAC) curve technique 25
C.2.1 Principle 25

Documents
Document Sharing Hub

© ISO 2012 – All rights reserved

Full document details: BS EN ISO 16827:2014

C.2.2 Applications and limitations 26

Annex D (normative) **Probe movement sizing techniques** 27
D.1 Fixed amplitude level techniques 27
D.1.1 Principle 27
D.1.2 Application and limitations 27
D.2 6 dB drop from maximum technique 27
D.2.1 Principle 27
D.2.2 Application and limitations 27
D.3 12 dB or 20 dB drop from maximum technique 28
D.3.1 Principle 28
D.3.2 Application and limitations 28
D.4 Drop to noise level technique 28
D.4.1 Principle 28
D.4.2 Application and limitations 28
D.5 6 dB drop tip location technique 29
D.5.1 Principle 29
D.5.2 Application and limitations 29
D.6 Beam axis tip location technique 29
D.6.1 Principle 29
D.6.2 Application and limitations 29
D.7 20 dB drop tip location technique 30
D.7.1 Principle 30
D.7.2 Application and limitations 30

Annex E (normative) **Iterative sizing technique** 39
E.1 Scope 39
E.2 Normal incidence testing 39
E.2.1 Principle 39
E.2.2 Adjustment of gain 39
E.2.3 Procedure 39
E.3 Oblique incidence testing 40

Annex F (normative) **Mathematical algorithms for the estimation of the actual size of a discontinuity** 45
F.1 Large planar discontinuities 45
F.2 Small planar discontinuities 46
F.3 Planar discontinuities in a cylindrical test object 48

Annex G (informative) **Examples of special sizing techniques** 50
G.1 Tip diffraction techniques 50
G.2 Synthetic aperture focussing technique (SAFT) 51

© ISO 2012 – All rights reserved

Documents
Document Sharing Hub

Full document details: BS EN ISO 16827:2014

Foreword

ISO (the International Organization for Standardization) is a worldwide federation of national standards bodies (ISO member bodies). The work of preparing International Standards is normally carried out through ISO technical committees. Each member body interested in a subject for which a technical committee has been established has the right to be represented on that committee. International organizations, governmental and non-governmental, in liaison with ISO, also take part in the work. ISO collaborates closely with the International Electrotechnical Commission (IEC) on all matters of electrotechnical standardization.

International Standards are drafted in accordance with the rules given in the ISO/IEC Directives, Part 2.

The main task of technical committees is to prepare International Standards. Draft International Standards adopted by the technical committees are circulated to the member bodies for voting. Publication as an International Standard requires approval by at least 75 % of the member bodies casting a vote.

Attention is drawn to the possibility that some of the elements of this document may be the subject of patent rights. ISO shall not be held responsible for identifying any or all such patent rights.

ISO 16827 was prepared by Technical Committee ISO/TC 135, *Non-destructive testing*, Subcommittee SC 3, *Ultrasonic testing*.

© ISO 2012 – All rights reserved

Documents
Document Sharing Hub
Full document details: BS EN ISO 16827:2014

Introduction

This International Standard is based on EN 583-5:2000+A1:2003, *Non-destructive testing — Ultrasonic examination — Part 5: Characterization and sizing of discontinuities*.

The following International Standards are linked.

ISO 16810, *Non-destructive testing — Ultrasonic testing — General principles*

ISO 16811, *Non-destructive testing — Ultrasonic testing — Sensitivity and range setting*

ISO 16823, *Non-destructive testing — Ultrasonic testing — Transmission technique*

ISO 16826, *Non-destructive testing — Ultrasonic testing — Examination for discontinuities perpendicular to the surface*

ISO 16827, *Non-destructive testing — Ultrasonic testing — Characterization and sizing of discontinuities*

ISO 16828, *Non-destructive testing — Ultrasonic testing — Time-of-flight diffraction technique as a method for detection and sizing of discontinuities*

© ISO 2012 – All rights reserved
Documents
Document Sharing Hub
Full document details: BS EN ISO 16827:2014

INTERNATIONAL STANDARD ISO 16827:2012(E)

Non-destructive testing — Ultrasonic testing — Characterization and sizing of discontinuities

1 Scope

This document specifies the general principles and techniques for the characterization and sizing of previously detected discontinuities in order to ensure their evaluation against applicable acceptance criteria. It is applicable, in general terms, to discontinuities in those materials and applications covered by ISO 16810.

2 Normative references

The following referenced documents are indispensable for the application of this document. For dated references, only the edition cited applies. For undated references, the latest edition of the referenced document (including any amendments) applies.

ISO 16810:2012, *Non-destructive testing — Ultrasonic testing — General principles*

ISO 16811, *Non-destructive testing — Ultrasonic testing — Sensitivity and range setting*

ISO 16823, *Non-destructive testing — Ultrasonic testing — Transmission technique*

ISO 16828, *Non-destructive testing — Ultrasonic testing — Time-of-flight diffraction technique as a method for detection and sizing of discontinuities*

ISO 23279, *Non-destructive testing of welds — Ultrasonic testing — Characterization of indications in welds*

3 Principles of characterization of discontinuities

3.1 General

Characterization of a discontinuity involves the determination of those features which are necessary for its evaluation with respect to known acceptance criteria.

Characterization of a discontinuity may include:

a) determination of basic ultrasonic parameters (echo height, time of flight);

b) determination of its basic shape and orientation;

c) sizing, which may take the form of either:

   i) the measurement of one or more dimensions (or area/volume), within the limitations of the methods; or

   ii) the measurement of some agreed parameter e.g. echo height, where this is taken as representative of its physical size;

d) location e.g. the proximity to the surface or to other discontinuities;

e) determination of any other parameters or characteristics that may be necessary for complete evaluation;

© ISO 2012 – All rights reserved

Documents
Document Sharing Hub
Full document details: BS EN ISO 16827:2014

f) assessment of probable nature, e.g. crack or inclusion, where adequate knowledge of the test object and its manufacturing history makes this feasible.

Where the examination of a test object in accordance with the principles of ISO 16810 yields sufficient data on the discontinuity for its evaluation against the applicable acceptance criteria, no further characterization is necessary.

The techniques used for characterization shall be specified in conjunction with the applicable acceptance criteria.

3.2 Requirements for surface condition

The surface finish and profile shall be such that it permits sizing of discontinuities with the desired accuracy. In general the smoother and flatter the surface the more accurate the results will be.

For most practical purposes a surface finish of Ra = 6,3 μm for machined surfaces and 12,5 μm for shotblasted surfaces are recommended. The gap between the probe and the surface should not exceed 0,5 mm.

The above surface requirements should normally be limited to those areas from which sizing is to be carried out as, in general, they are unnecessary for discontinuity detection.

The method of surface preparation shall not produce a surface that gives rise to a high level of surface noise.

4 Pulse echo techniques

4.1 General

The principal ultrasonic characteristics/parameters of a discontinuity that are most commonly used for evaluation by the pulse echo techniques are described in 4.2 to 4.7 inclusive.

The characteristics/parameters to be determined shall be defined in the applicable standard or any relevant contractual document, and shall meet the requirements of 10.1 of ISO 16810:2012.

4.2 Location of discontinuity

The location of a discontinuity is defined as its position within a test object with respect to an agreed system of reference co-ordinates.

It shall be determined in relation to one or more datum points and with reference to the index point and beam angle of the probe, and measurement of the probe position and beam path length at which the maximum echo height is observed.

Depending on the geometry of the test object under examination, and the type of discontinuity, it may be necessary to confirm the location of the discontinuity from another direction, or with another probe angle, to ensure that the echo is not caused e.g. by a wave mode change at a geometrical feature of the test object.

4.3 Orientation of discontinuity

The orientation of a discontinuity is defined as the direction or plane along which the discontinuity has its major axis (axes) with respect to a datum reference on the test object.

The orientation can be determined by a geometrical reconstruction analogous to that described for location, with the difference that more beam angles and/or scanning directions are generally necessary than for simple location.

The orientation may also be determined from observation of the scanning direction at which the maximum echo height is obtained.

© ISO 2012 – All rights reserved
Documents
Document Sharing Hub
Full document details: BS EN ISO 16827:2014

In several applications, the precise determination of the discontinuity orientation in space is not required, only the determination of the projection of the discontinuity onto one or more pre-established planes and/or sections within the test object.

4.4 Assessment of multiple indications

The method for distinguishing between single and multiple discontinuities may be based on either qualitative assessment or quantitative criteria.

The qualitative determination consists of ascertaining, through the observation of the variations of the ultrasonic indications, whether or not such indications correspond to one or more separate discontinuities. Figure 1 shows typical examples of signals from grouped discontinuities in a forging or casting.

Where acceptance criteria are expressed in terms of maximum allowable dimensions, preliminary quantitative measurements shall be made in order to determine whether separate discontinuities are to be evaluated individually or collectively according to pre-established rules governing the evaluation of the group.

Such rules may be based on the concentration of individual discontinuities within the group, expressed in terms of the total of their lengths, areas or volumes in relation to the overall length, area or volume of the group. Alternatively, the rules may specify the minimum distance between individual discontinuities, often as a ratio of the dimensions of the adjacent discontinuities.

Where a more accurate characterization of a group of indications is required, an attempt may be made to determine whether the echoes arise from a series of closely spaced but separate discontinuities, or from a single continuous discontinuity having a number of separate reflecting facets, using the techniques described in Annex A.

4.5 Shape of discontinuity

4.5.1 Simple classification

There are a limited number of basic reflector shapes that may be identified by ultrasonic testing. In many cases evaluation against the applicable acceptance criteria only requires a relatively simple classification, described in B.1. According to this, the discontinuity is classified as either:

1) point, i.e. having no significant extent in any direction;

2) elongated, i.e. having a significant extent in one direction only;

3) complex, i.e. having a significant extent in more than one direction.

   When required, this classification may be sub-divided into:

   a) planar, i.e. having a significant extent in 2 directions only, and

   b) volumetric, i.e., having a significant extent in 3 directions.

Depending upon the requirements of the acceptance standard, either:

a) separate acceptance criteria may apply to each of the above classifications, or

b) the discontinuity, independently of its point, elongated or complex configuration, is projected on one or more pre-established sections, and each projection is conservatively treated as a crack-like planar discontinuity.

Simple classification will normally be limited to the use of those probes and techniques specified in the examination procedure. Additional probes or techniques shall only be used where agreed.

© ISO 2012 – All rights reserved

Documents
Document Sharing Hub
Full document details: BS EN ISO 16827:2014

4.5.2 Detailed classification of shape

In order to correctly identify the discontinuity types specified in the acceptance criteria, or to make a correct fitness-for-purpose evaluation, it may be necessary to make a more detailed assessment of the shape of the discontinuity.

Guidance on the methods that may be used for a more detailed classification is contained in B.2. It can require the use of additional probes and scanning directions to those specified in the examination procedure for the detection of discontinuities, and can also be aided by the use of the special techniques in Annexes E, F and G.

Classification of discontinuity shape will be limited to the determination of those discontinuity shapes which are necessary for the correct evaluation of a discontinuity against the acceptance criteria or other requirements. The validity of such a classification should be proven for the specific application, e.g. materials and configuration of the examination object, examination procedure, type of instrumentation and probes.

4.6 Maximum echo height of indication

The maximum echo height from a discontinuity is related to its size, shape and orientation. It is measured by comparison with a given reference level according to the methods described in ISO 16811.

Depending on the application and acceptance criteria the maximum echo height can be:

a) compared directly with a reference level that constitutes the acceptance standard;

b) used to determine the equivalent size of a discontinuity by comparison with the echo from a reference reflector at the same sound path range in the material under examination, or in a reference block having the same acoustic properties, as described in 4.7.2;

c) used in probe movement sizing techniques based on a specified echo drop (e.g. 6 dB) below the maximum, as described in 4.7.3.

4.7 Size of discontinuity

4.7.1 General

The sizing of a discontinuity consists in determining one or more projected dimensions/areas of the discontinuity onto pre-established directions and/or sections.

A short description of these techniques is found in Annex F and further details are given in ISO 16811.

4.7.2 Maximum echo height techniques

These techniques are based on a comparison of the maximum echo height from a discontinuity with the echo height from a reference reflector at the same sound path range.

They are only meaningful if:

a) the shape and orientation of the discontinuity are favourable for reflection, hence the need to take echo height measurements from several directions or angles, unless the shape and orientation are already known; and

b) the dimensions of the discontinuity, perpendicular to the beam axis, are less than the beam width in either one or both directions;

c) the basic shape and orientation of the reference target are similar to those of the discontinuity to be evaluated.

© ISO 2012 – All rights reserved
Documents
Document Sharing Hub
Full document details: BS EN ISO 16827:2014

The reference target may be either a disk-shaped reflector, e.g. flat-bottomed hole or an elongated reflector, e.g. a side drilled hole or notch.

Discontinuities subject to sizing may be classified as follows:

i) discontinuities whose reflective area has dimensions less than the beam width in all directions;

ii) discontinuities whose reflective area shows a narrow, elongated form, i.e. having a length greater than the beam width and a transverse dimension less than the beam width.

For discontinuities corresponding to i) above, the area of the discontinuity, projected onto a section normal to the ultrasonic beam axis, is assumed to be equivalent to the area of a disk-shaped reflector, perpendicular to the beam axis, producing a maximum echo of the same height at the same sound path range.

For discontinuities corresponding to ii) above, the reference reflectors are generally of elongated form, transverse to the ultrasonic beam axis, and having a specified transverse profile. Such reflectors may be notches with rectangular, U- or V-shaped profile, or cylindrical holes, etc.

4.7.3 Probe movement sizing techniques

When using an angle beam probe, the dimensions generally determined are:

i) dimension, l, parallel to the lateral scanning direction, determined by lateral movement of the probe (see Figure 2);

ii) dimension, h, normal to the transverse scanning direction, determined by transverse movement of the probe (see Figure 2).

When using a straight beam probe the dimensions generally determined are l_1 and l_2, in directions parallel to the scanning surface, by probe movement in two mutually perpendicular directions (see Figure 3).

The techniques are classified into three categories, as follows:

1) fixed amplitude level techniques where the ends of a discontinuity are taken to correspond to the plotted positions at which the echo height falls below an agreed assessment level;

2) techniques where the edges of the discontinuity are taken to correspond to the plotted positions at which the maximum echo height at any position along the discontinuity has fallen by an agreed number of dB. The edges of the discontinuity may be plotted along the beam axis or along a pre-determined beam edge;

3) techniques which aim to position the individual echoes from the tips of the discontinuity, or from reflecting facets immediately adjacent to the edges.

The principal probe movement sizing techniques are described in Annex D.

4.7.4 Selection of sizing techniques

The selection of sizing technique(s) depends upon the specific application and product type, and on the size and nature of the discontinuity.

The following general rules apply:

a) maximum echo height techniques (see 4.7.2) may be applied only if the dimension to be measured is less than the 6 dB beam width of the probe;

b) fixed amplitude level techniques (see 4.7.3 (1)) may be applied to discontinuities of any dimension, but since the measured size is an arbitrary value dependent on the particular amplitude level selected, these techniques should only be used when specifically called for in the acceptance standard;

Documents
Document Sharing Hub

© ISO 2012 – All rights reserved

Full document details: BS EN ISO 16827:2014

c) techniques based on probe movement at a specified dB drop below the maximum echo height from the particular discontinuity (see 4.7.3 (2)) may be applied only where the measured dimension is greater than the beam width at the same dB drop. If this condition is not fulfilled the dimension of the discontinuity shall be assumed to be equal to the applicable beam width;

d) techniques based on positioning the individual edges of a discontinuity (see 4.7.3 (3)) can only be applied when the ultrasonic indication from the discontinuity shows two or more resolvable echo maxima;

e) if the dimension to be determined is measured by more than one technique of 4.7.3 above, that value measured by the technique whose reliability and accuracy can be demonstrated to be the highest shall be assumed to be correct.

Alternatively, the highest measured value shall be assumed.

4.7.5 Sizing techniques with focusing ultrasonic probes

If focusing probes are used for sizing, the techniques described in 4.7.2 and 4.7.3 can also be used, provided that the discontinuity falls within the focal zone of the beam. In general the rules given under 4.7.4 also apply to focusing probes.

Where a higher accuracy of sizing is requested, an alternative technique can be used that is based on the construction of a series of C-scan images of the discontinuity.

These are plotted through an iterative process of 6 dB drop steps, starting from an initial plot corresponding to the 6 dB drop from the maximum echo of discontinuity, down to the step where the evolution of the plot corresponding to a 6 dB drop step is equal to, or less than, the 6 dB half-width of the ultrasonic beam.

In principle, this iterative technique can be used with both focused and unfocused ultrasonic beams, but where high accuracy is required, it is particularly suitable for use with focused beams. Annex E illustrates this technique in detail.

4.7.6 Use of mathematical algorithms for sizing

The main purpose of the sizing techniques illustrated in 4.7.2 and 4.7.3 is to compare the measured discontinuity size with acceptance levels expressed in terms of maximum allowable dimensions (or areas/volumes). Where a higher accuracy is required in order to better estimate the actual size of a discontinuity, but only data from the techniques described in 4.7.2 and 4.7.3 are available, mathematical algorithms may be of help.

Annex F illustrates in detail algorithms that can be used for the estimation of the actual size of discontinuities that are either larger or smaller than the diameter of the ultrasonic beam.

4.7.7 Special sizing techniques

Special sizing techniques are additional to those described in 4.7.2 to 4.7.6 and may be used in particular applications where higher levels of reliability and accuracy are called for.

When required, the reliability and accuracy of a special technique, applied to meet specified acceptance criteria, shall be demonstrated on the same configuration and type of material using the same examination procedure and type of instrumentation and probes.

The following list of special techniques is not comprehensive due to the large number available and their continuous development. Those described are the most commonly applied and their use is sufficiently well established.

© ISO 2012 – All rights reserved
Documents
Document Sharing Hub
Full document details: BS EN ISO 16827:2014

a) Tip diffraction techniques

These techniques can be used for the confirmation of the planar nature of a discontinuity (if this is the case) and for sizing the transverse dimension ("h" of Figure 2) of a planar discontinuity. They are based on the detection and location of the echoes diffracted by discontinuity edges;

b) mode conversion techniques

Where applicable these techniques can be used for detection and characterization of planar discontinuities. They make use of mode conversion to generate an additional ultrasonic beam at a different reflected angle and velocity when the plane of the discontinuity is oriented at the appropriate angle to the incident beam. In certain cases these techniques can also be used for sizing, but require the use of special reference blocks representative of the test object to be examined, and containing planar reflectors of different sizes;

c) other special techniques

Other examples of ultrasonic techniques for the sizing of volumetric and planar discontinuities are:

acoustical holography;

acoustical tomography;

techniques using beams of variable angle;

synthetic aperture focusing techniques (SAFT); and

reconstruction of sectorial B-scan images.

G.2 describes the principle and main characteristics of the SAFT.

5 Transmission technique

5.1 General

The general principles and requirements of the transmission technique are given in ISO 16823.

The following clauses describe some of the ultrasonic parameters and characteristics of the transmitted signals that may be used, either alone or in combination, to evaluate a discontinuity by this technique.

5.2 Location of discontinuity

When using normal beam probes, the location of a discontinuity is defined as the position on the surface of the test object, with respect to a two-dimensional co-ordinate system, at which the maximum reduction in transmitted signal amplitude is observed.

If it is practicable to direct ultrasonic beams through the area under investigation in two different directions, for example by the use of pairs of angle probes as illustrated in Figure 4, the three-directional location of the discontinuity may be determined.

5.3 Evaluation of multiple discontinuities

Whether a discontinuity is continuous or intermittent should first be determined qualitatively by observing variations in signal amplitude as the probe is scanned over the discontinuity.

If the signal amplitude remains relatively constant the discontinuity can be classified as continuous and evaluated as such against the acceptance criteria.

© ISO 2012 – All rights reserved

Documents
Document Sharing Hub
Full document details: BS EN ISO 16827:2014

Conversely, if the signal amplitude shows marked maxima and minima the discontinuity may be classified as intermittent. In this case, it is necessary to determine quantitatively whether the concentration of discrete discontinuities within the affected area is sufficiently high to apply the size/area limitations imposed by the acceptance criteria.

The concentration of discontinuities within the affected area may be expressed, for example, in terms of the ratio between:

a) the dimensions (or area) of individual discontinuities and the distance between them;

b) the total length of discontinuities and a given overall length; and

c) the total area of individual discontinuities and a given overall area.

5.4 Reduction of signal amplitude

This parameter is taken into account whenever the signal amplitude falls below the specified evaluation level.

If the signal is lost completely, the limits of the zone on the scanning surface over which this occurs should be determined.

If there is only partial loss of the signal, the position on the scanning surface corresponding to the maximum amplitude reduction should be determined, together with the dB value of the reduction compared to the signal obtained in a zone free from discontinuities.

If the area on the scanning surface, affected by the signal reduction, is less than the cross-sectional area of the ultrasonic beam, the size of the discontinuity normal to the beam may be estimated by matching the reduction in amplitude with that due to a known reference reflector, e.g. a flat-bottomed hole, in a representative sample of discontinuity-free material [see 5.5 (a)].

Where a relatively constant partial reduction in signal amplitude is observed over a zone significantly greater than the area of the ultrasonic beam, it is probable that the discontinuity may take the form of, for example, a band of numerous small inclusions, an area of abnormal grain structure, a layer of ultrasonically semi-transparent material, or a large discontinuity under high compressive stress.

5.5 Sizing of discontinuity

The sizing of a discontinuity consists in determining one or more dimensions (or the area) of the projection of the discontinuity onto the scanning surface. In particular, the dimensions (or areas) so determined are compared with the applicable acceptance standards, whenever these standards are expressed in terms of maximum allowable dimensions (or areas), in order to assess the acceptability or unacceptability of the discontinuity.

Sizing techniques may be classified essentially in the following 2 categories:

a) techniques based on the comparison of the maximum amplitude reduction of the signal with respect to the maximum amplitude reduction of an equivalent reflector. Adoption of these techniques for the sizing is limited to the case where the dimension (or area) of the zone on the scanning surface corresponding to the signal amplitude reduction below the evaluation level is less than the probe dimension (or area) projected on the scanning surface.

   In this case, the maximum amplitude reduction of the signal with respect to the signal amplitude in a zone free of discontinuities is determined, together with the reflector, generally a flat-bottomed hole perpendicular to the beam axis located at a given depth (e.g. half thickness), producing the same maximum reduction in the transmitted signal amplitude.

   The dimension (or area) of the discontinuity, projected on a plane perpendicular to the beam axis, is assumed to be the same as the dimension (or area) of the flat-bottomed hole;

© ISO 2012 – All rights reserved
Documents
Document Sharing Hub
Full document details: BS EN ISO 16827:2014

b) techniques based on the amplitude reduction of the signal in conjunction with probe movement. These techniques consist of determining the zone on the scanning surface corresponding either to the loss of the signal or to its amplitude reduction in comparison to a given value (most frequently 6 dB) with respect to the signal amplitude from a zone free of discontinuities.

Values other than 6 dB may be used when specified by the referencing documents, particularly when evaluating discontinuities which are partially transparent to ultrasound.

The extent of the zone so determined is assumed to be the extent of the discontinuity projection on the scanning surface.

Since the transmission technique is most frequently used for detecting comparatively large discontinuities, where the required sizing accuracy is relatively low, the techniques described under b) above are adequate for most of applications. In this context, the data collected by the techniques described under a) above constitute a reference that may be used to ensure the reproducibility of the examination, rather than the basis for the direct sizing of discontinuities.

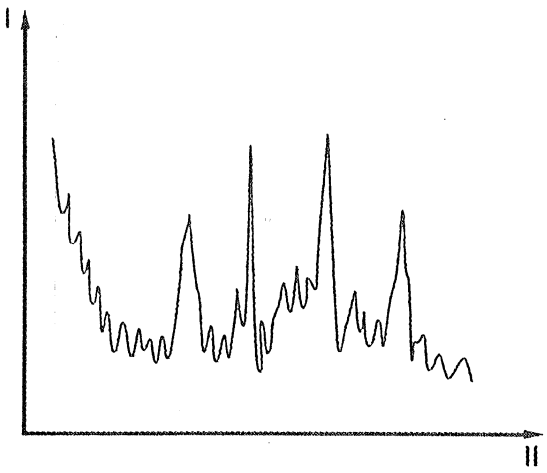

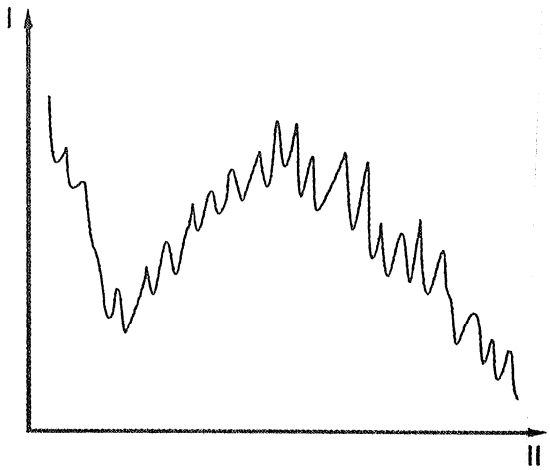

Key

I Signal height

II Time of flight

a) Resolvable grouped discontinuities **b) Unresolvable grouped discontinuities**

Figure 1 — Examples of A-scan signals from grouped discontinuities in a forging or casting

© ISO 2012 – All rights reserved

Documents
Document Sharing Hub
Full document details: BS EN ISO 16827:2014

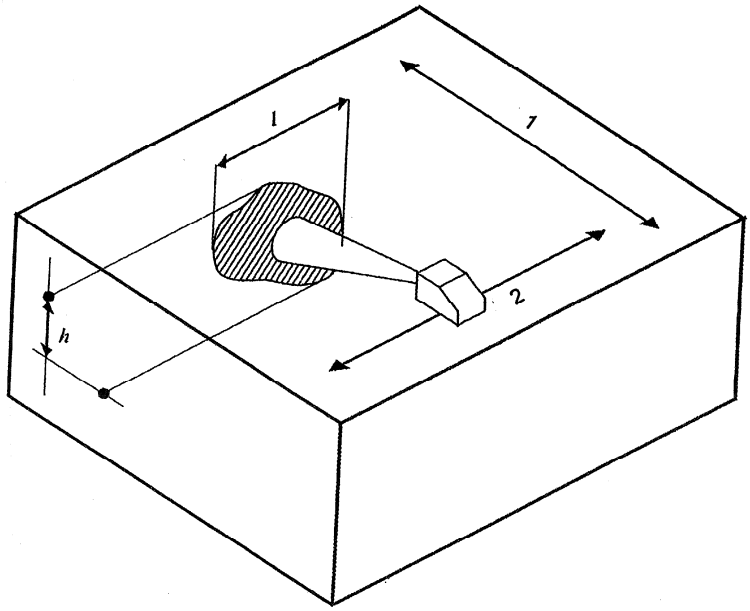

Key

1 Transverse movement
2 Lateral movement

Figure 2 — Projected parameters l and h for the conventional sizing of a discontinuity by an angle beam probe

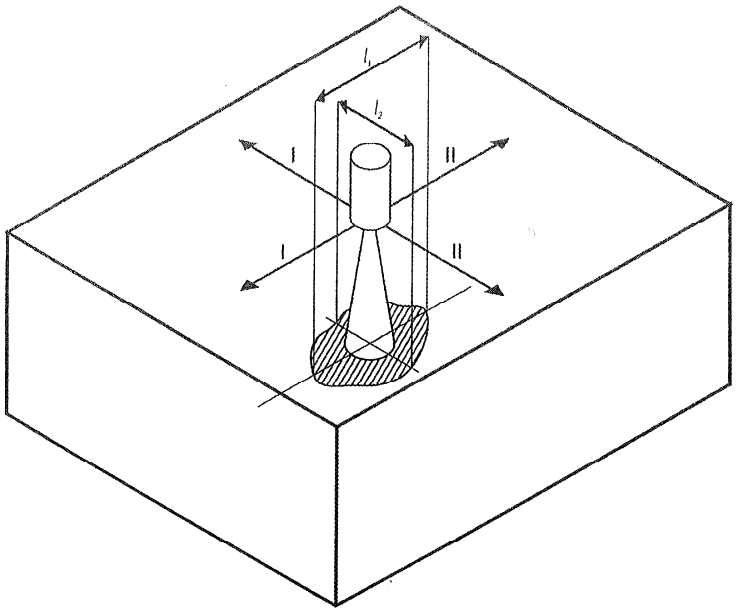

Key

I Probe movement

II Probe movement

Figure 3 — Parameters l_1 and l_2 for the conventional sizing of discontinuity by a straight beam probe

© ISO 2012 – All rights reserved

Documents
Document Sharing Hub

Full document details: BS EN ISO 16827:2014

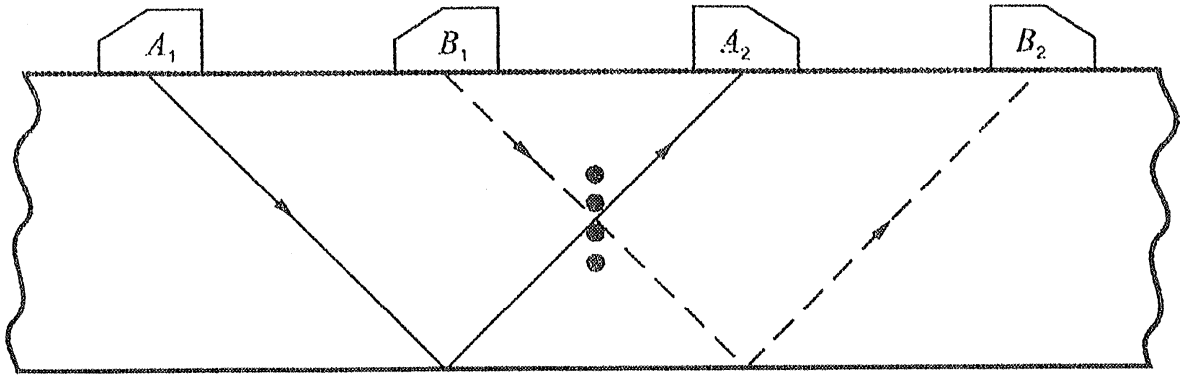

Figure 4 — Location of discontinuities by transmission technique using angle probes

The discontinuity lies at the intersection of the two beam paths A_1A_2 and B_1B_2, at which the maximum reduction in transmitted signal amplitude is observed.

© ISO 2012 – All rights reserved

Documents
Document Sharing Hub
Full document details: BS EN ISO 16827:2014

Annex A
(normative)

Analysis of multiple indications

Some of the techniques which may be used to distinguish between intermittent and continuous discontinuities are described below.

Techniques A.1 and A.2 are particularly applicable to welds but may be adapted for other applications where angle probe examination is practicable. Technique A.3 is of wider application but limited with respect to the minimum area of discontinuities that can be evaluated.

A.1 Lateral characterization

For discontinuities showing a single, sharp, A-scan indication, the scanning direction, beam angle, size and frequency of the probe should be selected to give the narrowest practical beam width at the distance of the discontinuity, and a careful lateral scan should be carried out under uniform coupling conditions.

Marked dips in the echo height envelope along its length suggest that the discontinuity is intermittent. This should be confirmed by carrying out swivel and orbital scans adjacent to the apparent breaks, and noting that the echo height falls rapidly about the normal and that no significant secondary echoes are observed. Any other response suggests that the apparent break is due to a change in lateral orientation.

A.2 Transverse (Through-thickness) characterization

Careful transverse scans should be carried out across the discontinuity, from at least two directions at short sound path ranges, and the form of the echo envelope shall be noted.

Significant dips, or complete breaks, in the echo envelope suggest that the discontinuity may be intermittent.

Where access permits, it is recommended that a composite through-thickness picture of the discontinuity be built up by plotting all the echoes observed from a number of different directions and angles. Smooth flat scanning surfaces on either side of the discontinuity, and high plotting accuracy, are necessary if this technique is to be of value.

A.3 Shadow technique

This technique is useful when the dimensions of the discontinuity, or group of discontinuities, are approximately equal to the beam width.

It is illustrated for angle probes in Figure A.1, but is equally applicable to normal beam probes, either using separate transmitting and receiving probes, or monitoring variations in the back wall echo height.

A strong transmitted signal through the affected area is positive proof of the absence of a major discontinuity. The amplitude of the transmitted signal is linked to the ratio of the discontinuity area to the beam area.

The resolution of all the above techniques may be improved by the use of focusing probes having a focal length close to the sound path range of the discontinuity.

Since the through-thickness dimension of a discontinuity is generally of critical importance, it should be assumed to be continuous unless there is conclusive evidence that it is intermittent in this direction.

© ISO 2012 – All rights reserved
Documents
Document Sharing Hub
Full document details: BS EN ISO 16827:2014