BS EN ISO 16890-2:2022
Incorporating corrigendum November 2024

BSI Standards Publication

Air filters for general ventilation

Part 2: Measurement of fractional efficiency and air flow resistance

Documents
Document Sharing Hub

Full document details: BS EN ISO 16890-2:2022

National foreword

This British Standard is the UK implementation of EN ISO 16890-2:2022. It is identical to ISO 16890-2:2022. It supersedes BS EN ISO 16890-2:2016 which is withdrawn.

The UK participation in its preparation was entrusted to Technical Committee MCE/21, Filters for gases and liquids.

A list of organizations represented on this committee can be obtained on request to its committee manager.

Contractual and legal considerations

This publication has been prepared in good faith, however no representation, warranty, assurance or undertaking (express or implied) is or will be made, and no responsibility or liability is or will be accepted by BSI in relation to the adequacy, accuracy, completeness or reasonableness of this publication. All and any such responsibility and liability is expressly disclaimed to the full extent permitted by the law.

This publication is provided as is, and is to be used at the recipient's own risk.

The recipient is advised to consider seeking professional guidance with respect to its use of this publication.

This publication is not intended to constitute a contract. Users are responsible for its correct application.

© The British Standards Institution 2024
Published by BSI Standards Limited 2024

ISBN 978 0 539 34379 3

ICS 23.120; 91.140.30

Compliance with a British Standard cannot confer immunity from legal obligations.

This British Standard was published under the authority of the Standards Policy and Strategy Committee on 30 September 2022.

Amendments/corrigenda issued since publication

Date	Text affected
30 November 2024	Correction to supersession details in national foreword

Documents
Document Sharing Hub

Full document details: BS EN ISO 16890-2:2022

EUROPEAN STANDARD

NORME EUROPÉENNE

EUROPÄISCHE NORM

EN ISO 16890-2

August 2022

ICS 91.140.30

Supersedes EN ISO 16890-2:2016

English Version

Air filters for general ventilation - Part 2: Measurement of fractional efficiency and air flow resistance (ISO 16890-2:2022)

Filtres à air de ventilation générale - Partie 2: Mesurage de l'efficacité spectrale et de la résistance à l'écoulement de l'air (ISO 16890-2:2022)

Luftfilter für die allgemeine Raumlufttechnik - Teil 2: Ermittlung des Fraktionsabscheidegrades und des Durchflusswiderstandes (ISO 16890-2:2022)

This European Standard was approved by CEN on 21 July 2022.

CEN members are bound to comply with the CEN/CENELEC Internal Regulations which stipulate the conditions for giving this European Standard the status of a national standard without any alteration. Up-to-date lists and bibliographical references concerning such national standards may be obtained on application to the CEN-CENELEC Management Centre or to any CEN member.

This European Standard exists in three official versions (English, French, German). A version in any other language made by translation under the responsibility of a CEN member into its own language and notified to the CEN-CENELEC Management Centre has the same status as the official versions.

CEN members are the national standards bodies of Austria, Belgium, Bulgaria, Croatia, Cyprus, Czech Republic, Denmark, Estonia, Finland, France, Germany, Greece, Hungary, Iceland, Ireland, Italy, Latvia, Lithuania, Luxembourg, Malta, Netherlands, Norway, Poland, Portugal, Republic of North Macedonia, Romania, Serbia, Slovakia, Slovenia, Spain, Sweden, Switzerland, Türkiye and United Kingdom.

EUROPEAN COMMITTEE FOR STANDARDIZATION
COMITÉ EUROPÉEN DE NORMALISATION
EUROPÄISCHES KOMITEE FÜR NORMUNG

CEN-CENELEC Management Centre: Rue de la Science 23, B-1040 Brussels

© 2022 CEN All rights of exploitation in any form and by any means reserved worldwide for CEN national Members.

Ref. No. EN ISO 16890-2:2022 E

Documents
Document Sharing Hub

Full document details: BS EN ISO 16890-2:2022

European foreword

This document (EN ISO 16890-2:2022) has been prepared by Technical Committee ISO/TC 142 "Cleaning equipment for air and other gases" in collaboration with Technical Committee CEN/TC 195 “Cleaning equipment for air and other gases” the secretariat of which is held by UNI.

This European Standard shall be given the status of a national standard, either by publication of an identical text or by endorsement, at the latest by February 2023, and conflicting national standards shall be withdrawn at the latest by February 2023.

Attention is drawn to the possibility that some of the elements of this document may be the subject of patent rights. CEN shall not be held responsible for identifying any or all such patent rights.

This document supersedes EN ISO 16890-2:2016.

Any feedback and questions on this document should be directed to the users’ national standards body/national committee. A complete listing of these bodies can be found on the CEN website.

According to the CEN-CENELEC Internal Regulations, the national standards organizations of the following countries are bound to implement this European Standard: Austria, Belgium, Bulgaria, Croatia, Cyprus, Czech Republic, Denmark, Estonia, Finland, France, Germany, Greece, Hungary, Iceland, Ireland, Italy, Latvia, Lithuania, Luxembourg, Malta, Netherlands, Norway, Poland, Portugal, Republic of North Macedonia, Romania, Serbia, Slovakia, Slovenia, Spain, Sweden, Switzerland, Türkiye and the United Kingdom.

Endorsement notice

The text of ISO 16890-2:2022 has been approved by CEN as EN ISO 16890-2:2022 without any modification.

Documents
Document Sharing Hub

Full document details: BS EN ISO 16890-2:2022

Contents

Page

Foreword ... **vi**

Introduction ... **viii**

1 Scope ... **1**

2 Normative references ... **1**

3 Terms and definitions ... **1**
3.1 Air flow and resistance ... 2
3.2 Test device ... 2
3.3 Aerosol ... 2
3.4 Particle counter ... 3
3.5 Efficiency ... 3
3.6 Other terms ... 4

4 Symbols and abbreviated terms ... **4**
4.1 Symbols ... 4
4.2 Abbreviated terms ... 6

5 General test requirements ... **6**
5.1 Test device requirements ... 6
5.2 Test device installation ... 6
5.3 Test rig requirements ... 7

6 Test materials ... **7**
6.1 Liquid phase aerosol ... 7
6.1.1 DiEthylHexylSebacate (DEHS) test aerosol ... 7
6.1.2 DEHS properties ... 7
6.1.3 Liquid phase aerosol generation ... 7
6.2 Solid phase aerosol ... 8
6.2.1 Potassium chloride (KCl) test aerosol ... 8
6.2.2 KCl properties ... 8
6.2.3 Solid phase aerosol generation ... 9
6.3 Reference aerosols ... 10
6.3.1 Reference aerosol for 0,3 µm to 1,0 µm ... 10
6.3.2 Reference aerosol for 1,0 µm to 10,0 µm ... 10
6.4 Aerosol loading ... 10

7 Test equipment ... **11**
7.1 Test rig ... 11
7.1.1 Dimensions ... 11
7.1.2 Construction materials ... 11
7.1.3 Test rig shape ... 12
7.1.4 Test rig air supply ... 12
7.1.5 Test rig isolation ... 12
7.1.6 D/S mixing orifice ... 12
7.1.7 Aerosol sampling ... 13
7.1.8 Test rig air flow rate measurement ... 15
7.1.9 Resistance to air flow measurement ... 15
7.1.10 Test devices not measuring 610 mm × 610 mm (24.0 inches × 24.0 inches) ... 16
7.1.11 Dust injection testing ... 16
7.2 Aerosol particle counter ... 17
7.2.1 General ... 17
7.2.2 OPC sampled size range ... 17
7.2.3 OPC particle size ranges ... 17
7.2.4 Sizing resolution ... 18
7.2.5 Calibration ... 18
7.2.6 Air flow rate ... 18
7.2.7 Zero counting ... 18

© ISO 2022 – All rights reserved

AVA Documents
Document Sharing Hub

Full document details: BS EN ISO 16890-2:2022

7.2.8 Dual OPC(s) 18
7.3 Temperature, relative humidity 18

8 Qualification of test rig and apparatus 19
8.1 Schedule of qualification testing requirements 19
8.1.1 General 19
8.1.2 Qualification testing 19
8.1.3 Qualification documentation 19
8.2 Qualification testing 20
8.2.1 Test rig — Pressure system testing 20
8.2.2 OPC — Air flow rate stability test 21
8.2.3 OPC — Zero test 21
8.2.4 OPC — Sizing accuracy 21
8.2.5 OPC — Overload test 22
8.2.6 Aerosol generator — Response time 22
8.2.7 Aerosol generator — Neutralizer 23
8.2.8 Test rig — Air leakage test 24
8.2.9 Test rig — Air velocity uniformity 24
8.2.10 Test rig — Aerosol uniformity 25
8.2.11 Test rig — Downstream mixing 26
8.2.12 Test rig — Empty test device section pressure 28
8.2.13 Test rig — 100 % efficiency test and purge time 28
8.2.14 Test rig — Correlation ratio 29
8.3 Maintenance 29
8.3.1 General 29
8.3.2 Test rig — Background counts 30
8.3.3 Test rig — Reference filter test 30
8.3.4 Test rig — Pressure reference test 31
8.3.5 Test rig — Final filter resistance 32

9 Test methods 32
9.1 Air flow rate 32
9.2 Measurement of resistance to air flow 32
9.3 Measurement of fractional efficiency 32
9.3.1 Aerosol sampling protocol 32
9.3.2 Background sampling 32
9.3.3 Testing sequence for a single OPC 33
9.3.4 Testing sequence for dual OPC 37

10 Data reduction and calculations 38
10.1 Correlation ratio 38
10.1.1 Correlation ratio general 38
10.1.2 Correlation ratio data reduction 39
10.2 Penetration and fractional efficiency 40
10.2.1 Penetration and fractional efficiency general 40
10.2.2 Penetration data reduction 41
10.3 Data quality requirements 43
10.3.1 Correlation background counts 43
10.3.2 Efficiency background counts 43
10.3.3 Correlation ratio 43
10.3.4 Penetration 44
10.4 Fractional efficiency calculation 45

11 Reporting results 45
11.1 General 45
11.2 Required reporting elements 45
11.2.1 Report general 45
11.2.2 Report values 45
11.2.3 Report summary 46
11.2.4 Report details 47

© ISO 2022 – All rights reserved
Documents
Document Sharing Hub
Full document details: BS EN ISO 16890-2:2022

Annex A (informative) **Example** **50**
Annex B (informative) **Resistance to air flow calculation** **57**
Bibliography **59**

© ISO 2022 – All rights reserved

Documents
Document Sharing Hub
Full document details: BS EN ISO 16890-2:2022

Foreword

ISO (the International Organization for Standardization) is a worldwide federation of national standards bodies (ISO member bodies). The work of preparing International Standards is normally carried out through ISO technical committees. Each member body interested in a subject for which a technical committee has been established has the right to be represented on that committee. International organizations, governmental and non-governmental, in liaison with ISO, also take part in the work. ISO collaborates closely with the International Electrotechnical Commission (IEC) on all matters of electrotechnical standardization.

The procedures used to develop this document and those intended for its further maintenance are described in the ISO/IEC Directives, Part 1. In particular, the different approval criteria needed for the different types of ISO documents should be noted. This document was drafted in accordance with the editorial rules of the ISO/IEC Directives, Part 2 (see www.iso.org/directives).

Attention is drawn to the possibility that some of the elements of this document may be the subject of patent rights. ISO shall not be held responsible for identifying any or all such patent rights. Details of any patent rights identified during the development of the document will be in the Introduction and/or on the ISO list of patent declarations received (see www.iso.org/patents).

Any trade name used in this document is information given for the convenience of users and does not constitute an endorsement.

For an explanation of the voluntary nature of standards, the meaning of ISO specific terms and expressions related to conformity assessment, as well as information about ISO's adherence to the World Trade Organization (WTO) principles in the Technical Barriers to Trade (TBT), see www.iso.org/iso/foreword.html.

This document was prepared by Technical Committee ISO/TC 142, *Cleaning equipment for air and other gases*, in collaboration with the European Committee for Standardization (CEN) Technical Committee CEN/TC 195, *Cleaning equipment for air and other gases,* in accordance with the Agreement on technical cooperation between ISO and CEN (Vienna Agreement).

This second edition cancels and replaces the first edition (ISO 16890-2:2016), which has been technically revised.

The main changes are as follows:

— definition of light scattering airborne particle counter (LSAPC) has been added in Clause 3;

— rewording of 6.3.1 and removal of 6.3.3 and 6.3.4 eliminating the matching criteria and use of alternate aerosols;

— in Figure 3, the distance between pressure drop taps and test device (7-8), wrongly indicated as 350 mm has been modified with “≥350 mm”;

— in 7.1.6 and 8.3.3.4, a sentence has been added to specify that the D/S mixing orifice shall not be installed during resistance to airflow measurement;

— in 7.2.1, aerosol particle counters (APC) and light scattering aerosol particle counter (LSAPC) have been added as common examples of aerosol particle counter;

— in 7.2.5, the incorrect reference to ISO 21501-4 has been corrected with ISO 21501-1;

— in 10.3.2, “correlation” has been changed to “efficiency” to be consistent with the title of the subclause;

— in 11.2.3, c), 6), iv), the word “additive” has been changed to “adhesive” to be consistent with the template of Table 10;

© ISO 2022 – All rights reserved
Documents
Document Sharing Hub
Full document details: BS EN ISO 16890-2:2022

— the example of the test report in Figure A.1 has been updated to match the template report of Table A.10.

A list of all parts in the ISO 16890 series can be found on the ISO website.

Any feedback or questions on this document should be directed to the user's national standards body. A complete listing of these bodies can be found at www.iso.org/members.html.

© ISO 2022 – All rights reserved

Documents
Document Sharing Hub
Full document details: BS EN ISO 16890-2:2022

Introduction

The effects of particulate matter (PM) on human health have been extensively studied in the past decades. The results are that fine dust can be a serious health hazard, contributing to or even causing respiratory and cardiovascular diseases. Different classes of PM can be defined according to the particle size range. The most important ones are PM_{10}, $PM_{2,5}$ and PM_1. The United States Environmental Protection Agency (EPA), the World Health Organization (WHO) and the European Union define PM_{10} as PM which passes through a size-selective inlet with a 50 % efficiency cut-off at 10 µm aerodynamic diameter. $PM_{2,5}$ and PM_1 are similarly defined. However, this definition is not precise if there is no further characterization of the sampling method and the sampling inlet with a clearly defined separation curve. In Europe, the reference method for the sampling and measurement of PM_{10} is described in EN 12341. The measurement principle is based on the collection on a filter of the PM_{10} fraction of ambient PM and the gravimetric mass determination (see Reference [10]).

As the precise definition of PM_{10}, $PM_{2,5}$ and PM_1 is quite complex and not easy to measure, public authorities, such as the US EPA or the German Federal Environmental Agency (Umweltbundesamt), increasingly use in their publications the simpler denotation of PM_{10} as being the particle size fraction less or equal to 10 µm. Since this deviation to the above-mentioned complex "official" definition does not have a significant impact on a filter element's particle removal efficiency, the ISO 16890 series refers to this simplified definition of PM_{10}, $PM_{2,5}$ and PM_1.

PM in the context of the ISO 16890 series describes a size fraction of the natural aerosol (liquid and solid particles) suspended in ambient air. The symbol ePM_x describes the efficiency of an air cleaning device to particles with an optical diameter between 0,3 µm and x µm. The following particle size ranges are used in the ISO 16890 series for the listed efficiency values as shown in Table 1.

Table 1 — Optical particle diameter size ranges for the definition of the efficiencies, ePM_x

Efficiency	**Size range**, µm
ePM_{10}	0,3 ≤ × ≤10
$ePM_{2,5}$	0,3 ≤ × ≤2,5
ePM_1	0,3 ≤ × ≤1

Air filters for general ventilation are widely used in heating, ventilation and air-conditioning applications of buildings. In this application, air filters significantly influence the indoor air quality and, hence, the health of people, by reducing the concentration of PM. To enable design engineers and maintenance personnel to choose the correct filter types, there is an interest from international trade and manufacturing for a well-defined, common method of testing and classifying air filters according to their particle efficiencies, especially with respect to the removal of PM. Current regional standards are applying completely different testing and classification methods, which do not allow any comparison with each other, and thus hinder global trade with common products. Additionally, the current industry standards have known limitations by generating results which often are far away from filter performance in service, i.e. overstating the particle removal efficiency of many products. With the ISO 16890 series, a completely new approach for a classification system is adopted, which gives better and more meaningful results compared to the existing standards.

The ISO 16890 series describes the equipment, materials, technical specifications, requirements, qualifications and procedures to produce the laboratory performance data and efficiency classification based upon the measured fractional efficiency converted into a particulate matter efficiency (ePM) reporting system.

Air filter elements according to the ISO 16890 series are evaluated in the laboratory by their ability to remove aerosol particulate expressed as the efficiency values ePM_1, $ePM_{2,5}$ and ePM_{10}. The air filter elements can then be classified according to the procedures defined in ISO 16890-1. The particulate removal efficiency of the filter element is measured as a function of the particle size in the range of 0,3 µm to 10 µm of the unloaded and unconditioned filter element as per the procedures defined in this document. After the initial particulate removal efficiency testing, the air filter element is conditioned according to the procedures defined in ISO 16890-4 and the particulate removal efficiency is repeated.

© ISO 2022 – All rights reserved
AVA Documents Document Sharing Hub
Full document details: BS EN ISO 16890-2:2022

on the conditioned filter element. This is done to provide information about the intensity of any electrostatic removal mechanism which can possibly be present with the filter element for test. The average efficiency of the filter is determined by calculating the mean between the initial efficiency and the conditioned efficiency for each size range. The average efficiency is used to calculate the $e\mathrm{PM}_x$ efficiencies by weighting these values to the standardized and normalized particle size distribution of the related ambient aerosol fraction. When comparing filters tested in accordance with the ISO 16890 series, the fractional efficiency values are always compared among the same $e\mathrm{PM}_x$ class (e.g. $e\mathrm{PM}_1$ of filter A with $e\mathrm{PM}_1$ of filter B). The test dust capacity and the initial arrestance of a filter element are determined as per the test procedures defined in ISO 16890-3.

The results from this document can also be used by other standards that define or classify the fractional efficiency in the size range of 0,3 µm to 10 µm when electrostatic removal mechanism is an important factor to consider, for example ISO 29461.

The performance results obtained in accordance with the ISO 16890 series cannot by themselves be quantitatively applied to predict performance in service with regard to efficiency and lifetime.

© ISO 2022 – All rights reserved

Documents
Document Sharing Hub
Full document details: BS EN ISO 16890-2:2022

Documents
Document Sharing Hub

Air filters for general ventilation —

Part 2: Measurement of fractional efficiency and air flow resistance

1 Scope

This document specifies the aerosol production, the test equipment and the test methods used for measuring fractional efficiency and air flow resistance of air filters for general ventilation.

It is intended to be used in conjunction with ISO 16890-1, ISO 16890-3 and ISO 16890-4.

The test method described in this document is applicable for air flow rates between 0,25 m^3/s (900 m^3/h, 530 ft^3/min) and 1,5 m^3/s (5 400 m^3/h, 3 178 ft^3/min), referring to a test rig with a nominal face area of 610 mm × 610 mm (24.0 inches × 24.0 inches).

This document refers to particulate air filter elements for general ventilation having an ePM_1 efficiency less than or equal to 99 % and an ePM_{10} efficiency greater than 20 % when tested as per the procedures defined within the ISO 16890 series.

NOTE The lower limit for this test procedure is set at a minimum ePM_{10} efficiency of 20 % since it is very difficult for a test filter element below this level to meet the statistical validity requirements of this procedure.

This document is not applicable to filter elements used in portable room-air cleaners.

2 Normative references

The following documents are referred to in the text in such a way that some or all of their content constitutes requirements of this document. For dated references, only the edition cited applies. For undated references, the latest edition of the referenced document (including any amendments) applies.

ISO 5167-1, *Measurement of fluid flow by means of pressure differential devices inserted in circular cross-section conduits running full — Part 1: General principles and requirements*

ISO 21501-1, *Determination of particle size distribution — Single particle light interaction methods — Part 1: Light scattering aerosol spectrometer*

ISO 29463-1, *High efficiency filters and filter media for removing particles from air — Part 1: Classification, performance, testing and marking*

3 Terms and definitions

For the purposes of this document the following terms and definitions apply.

ISO and IEC maintain terminology databases for use in standardization at the following addresses:

— ISO Online browsing platform: available at https://www.iso.org/obp

— IEC Electropedia: available at https://www.electropedia.org/

© ISO 2022 – All rights reserved

Documents
Document Sharing Hub
Full document details: BS EN ISO 16890-2:2022

3.1 Air flow and resistance

3.1.1
air flow rate
volume of air flowing through the filter per unit time

[SOURCE: ISO 29464:2017, 3.1.24]

3.1.2
resistance to airflow
difference in absolute (static) pressure between two points in an airflow system at specified conditions, especially when measured across the *filter element* (3.2.2)

[SOURCE: ISO 29464:2017, 3.1.36, modified — "at specified conditions, especially when measured across the filter element (3.2.2)" has been added.]

3.2 Test device

3.2.1
test device
filter element (3.2.2) being subjected to performance testing

[SOURCE: ISO 29464:2017, 3.1.38]

3.2.2
filter element
structure made of the filtering material, its supports and its interfaces with the filter housing

[SOURCE: ISO 29464:2017, 3.2.77]

3.2.3
upstream
U/S
area or region from which fluid flows as it enters the *test device* (3.2.1)

[SOURCE: ISO 29464:2017, 3.1.39]

3.2.4
downstream
D/S
area or region into which fluid flows on leaving the *test device* (3.2.1)

[SOURCE: ISO 29464:2017, 3.1.11]

3.3 Aerosol

3.3.1
liquid phase aerosol
liquid particles suspended in a gas

[SOURCE: ISO 29464:2017, 3.2.2]

3.3.2
solid phase aerosol
solid particles suspended in a gas

[SOURCE: ISO 29464:2017, 3.2.8]

© ISO 2022 – All rights reserved
Documents
Document Sharing Hub
Full document details: BS EN ISO 16890-2:2022

3.3.3
reference aerosol
defined approved aerosol for test measurement within a specific size range

[SOURCE: ISO 29464:2017, 3.2.7]

3.4 Particle counter

3.4.1
particle counter
device for detecting and counting numbers of discrete airborne particles present in a sample of air

[SOURCE: ISO 29464:2017, 3.2.114]

3.4.2
optical particle counter
OPC
particle counter (3.4.1) which functions by illuminating airborne particles in a sample flow of air, converting the scattered light impulses to electrical impulse data capable of analysis to provide data on the number of particles in multiple size intervals

Note 1 to entry: See ISO 21501-1.

[SOURCE: ISO 29464:2017, 3.2.119, modified — "particle population and size distribution" has been replaced for clarity with "the number of particles in multiple size intervals".]

3.4.3
sampling air flow
volumetric flow rate through the instrument

3.4.4
particle size
p
geometric diameter (equivalent spherical, optical or aerodynamic, depending on context) of the particles of an aerosol

[SOURCE: ISO 29464:2017, 3.2.133]

3.4.5
particle size distribution
presentation, in the form of tables, numbers or graphs, of the experimental results obtained using a method or an apparatus capable of measuring the equivalent diameter of particles in a sample or capable of giving the proportion of particles for which the equivalent diameter lies between defined limits

[SOURCE: ISO 29464:2017, 3.2.135]

3.4.6
isokinetic sampling
technique for air sampling such that the probe inlet air velocity is the same as the velocity of the air surrounding the sampling point

[SOURCE: ISO 29464:2017, 3.2.105]

3.5 Efficiency

3.5.1
efficiency
fraction or percentage of a challenge contaminant that is removed by a *test device* (3.2.1)

[SOURCE: ISO 29464:2017, 3.1.12]

© ISO 2022 – All rights reserved

Documents
Document Sharing Hub
Full document details: BS EN ISO 16890-2:2022

3.5.2
fractional efficiency
ability of an air cleaning device to remove particles of a specific size or size range

Note 1 to entry: The efficiency plotted as a function of particle size gives the particle size efficiency spectrum.

[SOURCE: ISO 29464:2017, 3.2.59]

3.5.3
penetration
P
ratio of contaminant concentration *downstream* (3.2.4) of the test device to the *upstream* (3.2.3) (challenge) concentration

Note 1 to entry: Penetration is sometimes expressed as a percentage.

Note 2 to entry: Penetration is related to efficiency (E) by the expression: $E = (1 - P) \times 100$ %.

[SOURCE: ISO 29464:2017, 3.1.34]

3.5.4
correlation ratio
R
calculation of any potential bias between the *upstream* (3.2.3) and *downstream* (3.2.4) sampling systems

[SOURCE: ISO 29464:2017, 3.2.33]

3.6 Other terms

3.6.1
HEPA filter
filters with performance complying with requirements of filter class ISO 35 H to ISO 45 H as per ISO 29463-1

Note 1 to entry: Reference particle filters are laboratory tested for removal efficiency by particle size and/or resistance to air flow.

[SOURCE: ISO 29464:2017, 3.2.84]

3.6.2
reference filter
primary device possessing accurately known parameters used as a standard for calibrating secondary devices

[SOURCE: ISO 29464:2017, 3.1.35, modified — Note 1 to entry has been deleted.]

4 Symbols and abbreviated terms

4.1 Symbols

R_a	current radioactivity of the source
R_{a0}	radioactivity of the source at date of manufacturer
t	time (years)
$t_{0,5}$	half-life time (years)
C_v	coefficient of variation

© ISO 2022 – All rights reserved
Documents
Document Sharing Hub
Full document details: BS EN ISO 16890-2:2022

δ	standard deviation of the data points
$\bar{m}$	mean value of the data points
$U_{c,i,p}$	upstream correlation count for sample *i*, and particle size, *p*
$D_{c,i,p}$	downstream correlation count for sample *i*, and particle size, *p*
$U_{\mathrm{B,b},p}$, $U_{\mathrm{B,f},p}$	upstream beginning or final background average count at a specific particle size, *p*
$D_{\mathrm{B,b},p}$, $D_{\mathrm{B,f},p}$	downstream beginning or final background average count at a specific particle size, *p*
$D_{\mathrm{B},p}$	downstream background average count for efficiency sample, *i*, and for particle size, *p*
$D_{\mathrm{B,c},p}$	downstream background average count for correlation sample, *i*, and for particle size, *p*
$B_{\mathrm{b},i,p}$, $B_{\mathrm{f},i,p}$	measured beginning or final upstream background count for sample, *i*, and particle size, *p*
$d_{\mathrm{b},p}$, $d_{\mathrm{f},p}$	measured beginning or final downstream background count for particle size, *p*
$U_{\mathrm{B},p}$, $U_{\mathrm{B,c},s}$	upstream background average count for efficiency or correlation at a specific particle size, *p*
$N_{i,p}$	measured upstream efficiency count for sample, *i*, and particle size, *p*
$U_{i,p}$	upstream efficiency average for sample, *i*, and for particle size, *p*
$U_{\mathrm{tot},p}$	sum of the upstream particle counts for particle size, *p*
$D_{i,p}$	downstream efficiency average for sample, *i*, and for particle size, *p*
$R_{i,p}$	correlation ratio for sample, *i*, and for particle size, *p*
$\bar{R}_p$	correlation ratio at a specific particle size, *p*
N	number of samples
$e_{\mathrm{c},p}$	95 % uncertainty of the correlation value at a specific particle size, *p*
S_t	student's *t* distribution variable
v	number of degrees of freedom for student's *t* distribution variable
$\bar{R}_{lcl,p}$	lower confidence limit of the correlation ratio at a specific particle size, *p*
$\bar{R}_{ucl,p}$	upper confidence limit of the correlation ratio at a specific particle size, *p*
$\delta_{\mathrm{c},p}$	standard deviation of the correlation value at a specific particle size, *p*
$U_{\mathrm{c,tot},p}$	sum of the upstream particles sampled during correlation at a specific particle size, *p*
$U_{c,i,p}$	correlation particles sampled for sample, *i*, and for particle size, *p*
p	particle size
P	penetration or the fraction of particulate that penetrates the test device
$\bar{P}_{o,p}$	observed penetration at a specific particle size, *p*
$\bar{P}_p$	final penetration at a specific particle size, *p*
$\bar{P}_{lcl,p}$	lower confidence limit of the penetration at a specific particle size, *p*

© ISO 2022 – All rights reserved

Documents
Document Sharing Hub
Full document details: BS EN ISO 16890-2:2022

$\bar{P}_{ucl,p}$	upper confidence limit of the penetration at a specific particle size, p
e_p	95 % uncertainty of the penetration value at a specific particle size, p
δ_p	standard deviation of the penetration value at a specific particle size, p
e_i	static or dynamic uncertainty
$U_{tot,p}$	sum of the upstream particles sampled during penetration at a specific particle size, p
E_p	fractional efficiency at a specific particle size, p

4.2 Abbreviated terms

ASHRAE	American Society of Heating Refrigeration and Air Conditioning Engineers
CL	concentration limit
DEHS	(DiEthylHexylSebacate)
KCl	potassium chloride solid phase aerosol
NIST	National Institute of Standards and Technology
PSL	polystyrene latex spheres
RH	relative humidity, %
TR	test rig

5 General test requirements

5.1 Test device requirements

The test device shall be designed so that when correctly mounted in the ventilation test rig, no air/dust leaks occur around the exterior test device frame and the test rig sealing surfaces. The test device shall be designed or marked so as to prevent incorrect mounting.

The complete test device (filter and frame) shall be made of material suitable to withstand normal usage and exposure to the range of temperature, humidity and corrosive environments likely to be encountered in service.

The complete test device shall be designed so as to withstand mechanical constraints that are likely to be encountered during normal use. Dust or fibre released from the test device media by air flow through the test device shall not constitute a hazard or nuisance for the people (or devices) exposed to filtered air.

5.2 Test device installation

The test device shall be mounted in accordance with the manufacturer's recommendations and after environmental equilibrium with the test air weighed to the nearest gram. Devices requiring external accessories shall be operated during the test with accessories having characteristics equivalent to those used in actual practice. The test device, including any normal mounting frame, shall be sealed into the test rig in a manner that prevents leakage. The tightness shall be checked by visual inspection; no visible leaks are acceptable. If for any reason dimensions do not allow testing of a test device under standard test conditions, assembly of two or more devices of the same type or model is permitted, provided no leaks occur in the resulting assembly. The operating conditions of such accessory equipment shall be recorded.

© ISO 2022 – All rights reserved
Documents
Document Sharing Hub
Full document details: BS EN ISO 16890-2:2022

5.3 Test rig requirements

Critical dimensions and arrangements of the test apparatus are shown in Figures 1 to 4 and Figures 6, 7 and 10, and are intended to help construct a test rig to meet the performance requirements of this document. All dimensions shown are mandatory unless otherwise indicated. Tolerances are shown in the figures in this document. Units are in mm (inches) unless otherwise indicated. The design of equipment not specified (including, but not limited to, blowers, valves and external piping) is discretionary, but the equipment shall have adequate capacity to meet the performance requirements of this document.

6 Test materials

6.1 Liquid phase aerosol

6.1.1 DiEthylHexylSebacate (DEHS) test aerosol

Liquid phase aerosol of DEHS produced by a Laskin nozzle arrangement is widely used in the testing of high efficiency filters. DEHS is the same as DES Di (2-ethylhexyl) Sebacate or Bis (2-ethylhexyl) Sebacate since the aerodynamic, geometric and light scattering sizes are close to each other when measured with optical particle counters (OPCs). The DEHS aerosol shall be used untreated and introduced directly into the test rig.

6.1.2 DEHS properties

Formula	$C_{26}H_{50}O_4$ or $CH_3(CH_2)_3CH(C_2H_5)CH_2OOC(CH_2)_8COOCH_2CH(C_2H_5)(CH_2)3CH_3$
Molecular weight	426,69 g/mol
Density	912 kg/m^3 (57 lb/ft^3)
Melting point	225 K
Boiling point	505 K to 522 K
Flash point	> 473 K
Vapour pressure	< 1 Pa at 293 K
Refractive index	1,452 at 600 nm wavelength
Dynamic viscosity	0,022 Pa·s (0.015 lb/ft·s) to 0,024 Pa·s (0.016 lb/ft·s)
CAS Registry Number® [a]	122-62-3

[a] CAS Registry Number® is a trademark of CAS corporation. This information is given for the convenience of users of this document and does not constitute an endorsement by ISO of the product named. Equivalent products may be used if they can be shown to lead to the same results.

6.1.3 Liquid phase aerosol generation

The test aerosol shall consist of untreated and undiluted DEHS, or other liquid phase aerosols in accordance with 6.3.

Figure 1 gives an example of a system for generating the aerosol. It consists of a small container with DEHS liquid and a Laskin nozzle. The aerosol is generated by feeding compressed particle-free air through the Laskin nozzle. The atomized droplets are then directly introduced into the test rig. The pressure and air flow to the nozzle are varied according to the test flow and the required aerosol concentration.

NOTE For a test air flow rate of 0,944 m^3/s (2 000 ft^3/min), the pressure is about 17 kPa (2.5 lb/in^2), corresponding to an air flow of about 0,39 dm^3/s [1,4 m^3/h, (0.82 ft^3/min)] through the nozzle.

Any other generator capable of producing droplets in sufficient concentrations in the particle size range of 0,3 µm to 1,0 µm can be used.

© ISO 2022 – All rights reserved

Documents
Document Sharing Hub
Full document details: BS EN ISO 16890-2:2022

Before testing, regulate the upstream concentration to reach steady-state and to have a concentration below the coincidence level of the OPC.

Dimensions in millimetres

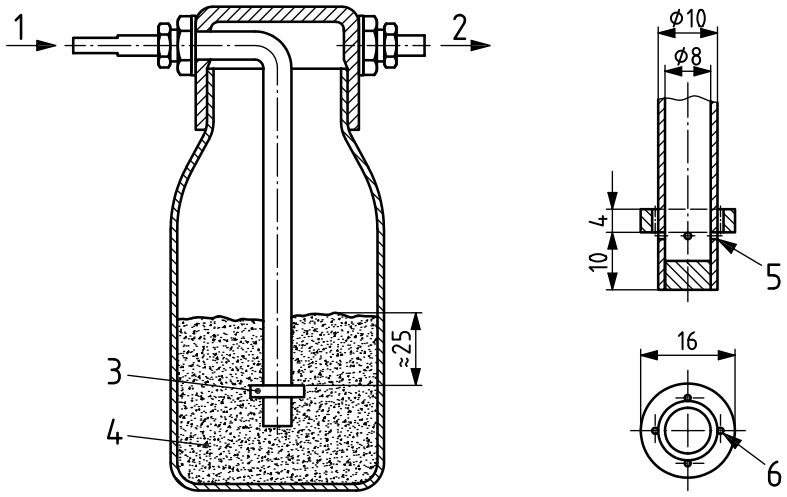

Key

1 particle-free air (pressure about 17 kPa) (2,5 lb/in^2)

2 aerosol to test rig

3 Laskin nozzle

4 liquid test aerosol

5 four ⌀ 1,0 mm holes 90° apart top edge of holes and just touching the bottom of the collar

6 four ⌀ 2,0 mm holes next to the tube in line with the Ø 1,0 mm holes (key 5)

Figure 1 — Liquid phase aerosol generator

6.2 Solid phase aerosol

6.2.1 Potassium chloride (KCl) test aerosol

The KCl test aerosol shall be polydisperse solid-phase (dry) KCl particles generated from an aqueous solution. For example, a KCl solution can be prepared by combining 120 g of reagent grade KCl with 1 l of reagent grade distilled water. The solution is fed to the atomizing nozzle at around 1,2 ml/min (0.04 oz/min) by a metering pump. Varying the operating air pressure of the generator and the solution flow rate allows control of the challenge aerosol concentration.

NOTE 1 Reagent grade water as defined by ASTM D1193.

NOTE 2 The 120 g KCl to 1 l of water shown here is an example. The actual ratio used can vary depending on the equipment used.

6.2.2 KCl properties

Formula	KCl
Molecular weight	74,55 g/mol
Density	1 984 kg/m^3 (123.86 lb/ft^3)
Melting point	1 049 K
Boiling Point	1 686 K

© ISO 2022 – All rights reserved
Documents
Document Sharing Hub
Full document details: BS EN ISO 16890-2:2022

Solubility	347 kg/m^3 at 293 K
Refractive index	1,490 at 600 nm wavelength
CAS number	7447-40-7

6.2.3 Solid phase aerosol generation

The solid phase test aerosol generator shall be as illustrated in Figure 2. The aerosol generator shall provide a stable test aerosol of sufficient concentration over the 0,30 µm to 10 µm particle size range to meet the minimum aerosol requirements of this document without overloading the OPC.

The nozzle is positioned at the top of a 305 mm (12.0 inches) diameter, 1 300 mm (51.0 inches) high transparent acrylic spray tower. The tall tower serves two purposes: it allows the KCl droplets to dry by providing an approximately 40 s mean residence time and it allows larger-sized particles to fall out of the aerosol.

The aerosol shall be brought to a Boltzmann electrostatic charge distribution by an alpha or beta radiation generator with an activity of at least 185 MBq (5 mCi) or a corona discharge ionizer. The corona discharge ionizer shall have a minimum corona current of 3 µA and shall be balanced to provide equal amounts of positive and negative ions.

NOTE 1 A Boltzmann charge distribution is the average charge found in ambient air. Electrostatic charging is an unavoidable consequence of most aerosol generation methods of a solid phase aerosol.

NOTE 2 The activity level of a radioactive source decreases with time. The source strength of 185 MBq (5 mCi) is the minimum source strength at the end of the life. Thus, if the source strength is 370 MBq (10 mCi) when new, the source strength will be 185 MBq (5 mCi) after one half-life of decay.

© ISO 2022 – All rights reserved

Documents
Document Sharing Hub
Full document details: BS EN ISO 16890-2:2022

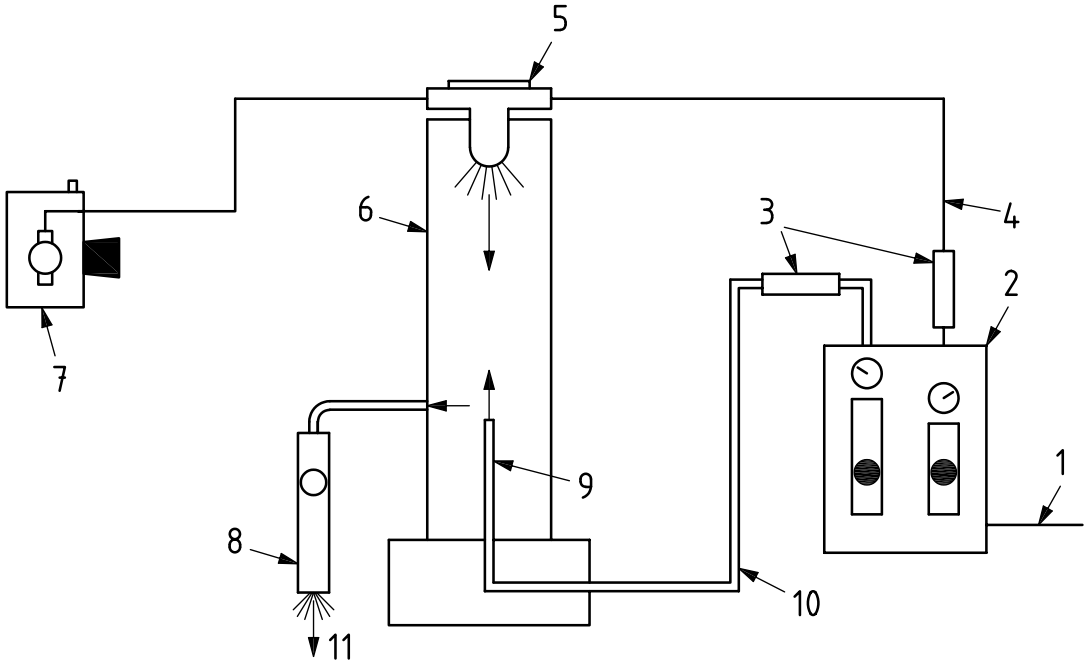

Key

1 clean, dry compressed air source
2 air control panel (rotameters with needle valve and outlet pressure gauge)
3 minimum HEPA efficiency filters
4 atomizing air 0,5 dm^3/s (1 ft^3/min) nominal (adjusted speed)
5 air atomizing nozzle
6 spray tower 305 mm (12.0 inches) diam. 1 300 mm (51.0 inches) tall
7 metering pump speed 20 cm/s, KCl solution water
8 radioactive neutralizer located at aerosol outlet, if used
9 corona discharge neutralizer located in drying air supply line, if used
10 drying air 1,9 dm^3/s (0.040 ft^3/min)
11 outlet tube 38 mm (1.5 inches) internal diameter (can be located on the bottom of the spray tower)

Figure 2 — Schematic diagram of the solid phase aerosol particle generator system

6.3 Reference aerosols

6.3.1 Reference aerosol for 0,3 µm to 1,0 µm

For measuring the filtration performance from 0,3 µm to 1,0 µm, the liquid phase aerosol listed in 6.1 shall be used.

6.3.2 Reference aerosol for 1,0 µm to 10,0 µm

For measuring the filtration performance from 1,0 µm to 10,0 µm, the solid phase aerosol listed in 6.2 shall be used.

6.4 Aerosol loading

Any aerosol used to test the filtration performance according to this document shall be introduced in the filter element long enough to allow the test to be performed, but not so long as to change the filtration performance characteristics of the tested device.

© ISO 2022 – All rights reserved
Documents
Document Sharing Hub
Full document details: BS EN ISO 16890-2:2022