BS EN ISO 16891:2016

BSI Standards Publication

Test methods for evaluating degradation of characteristics of cleanable filter media (ISO 16891:2016)

bsi.

...making excellence a habit.™

Document Sharing Hub

National foreword

This British Standard is the UK implementation of EN ISO 16891:2016.

The UK participation in its preparation was entrusted to Technical Committee MCE/21, Filters for gases and liquids.

A list of organizations represented on this committee can be obtained on request to its secretary.

This publication does not purport to include all the necessary provisions of a contract. Users are responsible for its correct application.

© The British Standards Institution 2016. Published by BSI Standards Limited 2016

ISBN 978 0 580 82646 7

ICS 91.140.30

Compliance with a British Standard cannot confer immunity from legal obligations.

This British Standard was published under the authority of the Standards Policy and Strategy Committee on 31 March 2016.

Amendments issued since publication

Date	Text affected

Documents
Document Sharing Hub

Full document details: BS EN ISO 16891:2016

EUROPEAN STANDARD

NORME EUROPÉENNE

EUROPÄISCHE NORM

EN ISO 16891

February 2016

ICS 91.140.30

English Version

Test methods for evaluating degradation of characteristics of cleanable filter media (ISO 16891:2016)

Méthodes d'essais pour l'évaluation de la dégradation des propriétés des medias filtrants décolmatables (ISO 16891:2016)

Prüfmethode zur Ermittlung der Abnahme der Wirksamkeit von abreinigbaren Filtermedien (ISO 16891:2016)

This European Standard was approved by CEN on 7 November 2015.

CEN members are bound to comply with the CEN/CENELEC Internal Regulations which stipulate the conditions for giving this European Standard the status of a national standard without any alteration. Up-to-date lists and bibliographical references concerning such national standards may be obtained on application to the CEN-CENELEC Management Centre or to any CEN member.

This European Standard exists in three official versions (English, French, German). A version in any other language made by translation under the responsibility of a CEN member into its own language and notified to the CEN-CENELEC Management Centre has the same status as the official versions.

CEN members are the national standards bodies of Austria, Belgium, Bulgaria, Croatia, Cyprus, Czech Republic, Denmark, Estonia, Finland, Former Yugoslav Republic of Macedonia, France, Germany, Greece, Hungary, Iceland, Ireland, Italy, Latvia, Lithuania, Luxembourg, Malta, Netherlands, Norway, Poland, Portugal, Romania, Slovakia, Slovenia, Spain, Sweden, Switzerland, Turkey and United Kingdom.

EUROPEAN COMMITTEE FOR STANDARDIZATION
COMITÉ EUROPÉEN DE NORMALISATION
EUROPÄISCHES KOMITEE FÜR NORMUNG

CEN-CENELEC Management Centre: Avenue Marnix 17, B-1000 Brussels

© 2016 CEN All rights of exploitation in any form and by any means reserved worldwide for CEN national Members.

Ref. No. EN ISO 16891:2016 E

Documents
Document Sharing Hub

Full document details: BS EN ISO 16891:2016

European foreword

This document (EN ISO 16891:2016) has been prepared by Technical Committee ISO/TC 142 "Cleaning equipment for air and other gases" in collaboration with Technical Committee CEN/TC 195 “Air filters for general air cleaning” the secretariat of which is held by UNI.

This European Standard shall be given the status of a national standard, either by publication of an identical text or by endorsement, at the latest by August 2016, and conflicting national standards shall be withdrawn at the latest by August 2016.

Attention is drawn to the possibility that some of the elements of this document may be the subject of patent rights. CEN [and/or CENELEC] shall not be held responsible for identifying any or all such patent rights.

According to the CEN-CENELEC Internal Regulations, the national standards organizations of the following countries are bound to implement this European Standard: Austria, Belgium, Bulgaria, Croatia, Cyprus, Czech Republic, Denmark, Estonia, Finland, Former Yugoslav Republic of Macedonia, France, Germany, Greece, Hungary, Iceland, Ireland, Italy, Latvia, Lithuania, Luxembourg, Malta, Netherlands, Norway, Poland, Portugal, Romania, Slovakia, Slovenia, Spain, Sweden, Switzerland, Turkey and the United Kingdom.

Endorsement notice

The text of ISO 16891:2016 has been approved by CEN as EN ISO 16891:2016 without any modification.

Documents
Document Sharing Hub

Full document details: BS EN ISO 16891:2016

Contents

Page

Foreword ... **iv**
Introduction ... **v**
1 Scope ... **1**
2 Normative references ... **1**
3 Terms and definitions ... **1**
4 Symbols and abbreviated terms ... **4**
5 Principle ... **5**
6 Test specimen, equipment and test procedure ... **6**
6.1 General ... 6
6.2 Preparation of sheets for gas exposure ... 7
6.2.1 Shape and size of tensile specimen ... 7
6.2.2 Sample sheet for exposure ... 7
6.2.3 Selection of sample sheet through air permeability measurement ... 8
6.2.4 Filter media for exposure ... 8
6.3 Sample preparation ... 9
6.3.1 Exposure system ... 9
6.3.2 Heating system ... 11
6.3.3 Test gas supply system ... 11
6.3.4 Gas analyzer ... 11
6.3.5 Gas treatment device ... 12
6.4 Exposure conditions and procedures ... 12
6.4.1 Exposure conditions ... 12
6.4.2 Exposure period and number of exposure ... 12
6.4.3 Attachment of filter sample sheets in the sample case ... 13
6.4.4 Implementation of the exposure ... 13
7 Tensile strength measurement of exposed specimen ... **14**
7.1 Tensile test device ... 14
7.2 Preparation of a tensile test specimen ... 14
7.3 Method of tensile test ... 14
7.4 Characterization of the degradation ... 15
8 Test report ... **16**
Annex A (informative) **Causes and results of degradation of fabrics** ... **17**
Annex B (informative) **Possible evaluation method for characteristic change of fabrics** ... **18**
Annex C (informative) **Theoretical consideration of degradation mechanism** ... **19**
Annex D (informative) **Determination of specimen size** ... **22**
Annex E (informative) **Experimental setup for gas exposure** ... **26**
Annex F (informative) **Service temperature of filter materials** ... **30**
Annex G (informative) **Examples of measured data of fabric at different circumstances** ... **31**
Annex H (informative) **Example of test report** ... **37**
Bibliography ... **41**

© ISO 2016 – All rights reserved

Documents
Document Sharing Hub
Full document details: BS EN ISO 16891:2016

Foreword

ISO (the International Organization for Standardization) is a worldwide federation of national standards bodies (ISO member bodies). The work of preparing International Standards is normally carried out through ISO technical committees. Each member body interested in a subject for which a technical committee has been established has the right to be represented on that committee. International organizations, governmental and non-governmental, in liaison with ISO, also take part in the work. ISO collaborates closely with the International Electrotechnical Commission (IEC) on all matters of electrotechnical standardization.

The procedures used to develop this document and those intended for its further maintenance are described in the ISO/IEC Directives, Part 1. In particular the different approval criteria needed for the different types of ISO documents should be noted. This document was drafted in accordance with the editorial rules of the ISO/IEC Directives, Part 2 (see www.iso.org/directives).

Attention is drawn to the possibility that some of the elements of this document may be the subject of patent rights. ISO shall not be held responsible for identifying any or all such patent rights. Details of any patent rights identified during the development of the document will be in the Introduction and/or on the ISO list of patent declarations received (see www.iso.org/patents).

Any trade name used in this document is information given for the convenience of users and does not constitute an endorsement.

For an explanation on the meaning of ISO specific terms and expressions related to conformity assessment, as well as information about ISO's adherence to the WTO principles in the Technical Barriers to Trade (TBT) see the following URL: Foreword - Supplementary information

The committee responsible for this document is ISO/TC 142, *Cleaning equipment for air and other gases*.

© ISO 2016 – All rights reserved
Documents
Document Sharing Hub
Full document details: BS EN ISO 16891:2016

Introduction

The main purpose of using cleanable filter is, of course, to separate dust particles from dirty gases. They are usually designed to be usable for as long as two years to four years. However, it is very hard to design and/or select filter media properly, since their important characteristics of collection performance and residual pressure drop change with operation time. Physical and chemical properties of filter media, such as degradation in tensile strength, tenacity and so on, also change with time. Those changes can damage filter media and this can result in the breakage of bag filters and leakage of dust to the atmosphere. Hence the evaluation of these performances is also important for the rational design and the selection of appropriate filter media. ISO 11057:2011 has been published to meet the demand for the evaluation of filtration characteristics.

Changes in physical and chemical properties of filter media are caused by many factors, such as heat, corrosive gases, and mechanical reasons like clogging weave openings and increasing size of weave openings, the combination of those factors and so on (see Annex A). These changes are mostly adverse effects to filter media. Degradation proceeds very slowly, and thus, it takes a long time before recognizable and/or measurable change appears. Furthermore, the appearance of change depends on the combination of causes and fibre material. These facts are the main reason why mechanism of property changes has not been well understood despite its practical importance.[1]-[13] Hence, the characterization or evaluation methods for filter media have not been established yet[14][15] (see Annex B).

Nevertheless, there are demands for the establishment of a guideline for systematic characterization and evaluation of property change of filter media with respect to their relevant long-time operation not only from manufacturers of filter media, but also from producers and users of filter installations, especially the users treating combustion exhaust gases.

To evaluate degradation of filter media in a laboratory, it is important that experiment can be done in a relatively short time period by using controllable single or a small number of variables, i.e. causes of change.

Furthermore, it is important that the resulting effects are measureable. From this point of view, heat intensity is controllable by changing heating temperature and the intensity of corrosive gas is also controllable by changing gas concentration. Thus, their effect is expected to be accelerated. Of course, the effects can be evaluated by the degradation of tensile stress.

Evaluation of property change of filter media by corrosive gases can be done by contacting filter media with those corrosive materials in any phases, i.e. gas, liquid and solid state. Testing by dipping filter media into a solution of corrosive materials is easy and the resulting effects are expected to be obtained in a short period of time. Chinese Standard, GB/T 6719:2009 adopts this method.[16] Solid state testing can be carried out by hard contact of filter media but it will take a long time and it is very hard to control the intensity of corrosiveness.

Testing under the gaseous state takes much longer than a liquid type test but the intensity of corrosiveness is controllable and it is much easier than the test under the solid state. Furthermore, test temperature and gas conditions except corrosive gas concentrations, are similar to the actual operation condition of filtration, which is suitable (see Annex B). Hence, in this International Standard, test methods for evaluating degradation characteristics of cleanable unwoven filter media with synthetic fibre by heat and corrosive gases are standardized because they are most widely used for bag filtration.

The major objective of this International Standard is to specify the testing method to assess the relative change of physical performances of new and used cleanable filter media for industrial application, by exposing it in hot and/or corrosive gas conditions [17][18].

© ISO 2016 – All rights reserved

Documents
Document Sharing Hub
Full document details: BS EN ISO 16891:2016

Documents
Document Sharing Hub

INTERNATIONAL STANDARD ISO 16891:2016(E)

Test methods for evaluating degradation of characteristics of cleanable filter media

1 Scope

This International Standard specifies a standard reference test method useful to assess the relative degradation characteristics of cleanable filter media for industrial applications under standardized simulated test conditions. The main purpose of testing is to obtain the information about relative change of properties of filter media due to exposure to the simulated gas conditions for a long time. The main target of this International Standard is the property change of nonwoven fabric filters because they are frequently used under similar circumstances to the test gas conditions described in this International Standard.

The results obtained from this test method are not intended for predicting the absolute properties of full scale filter facilities. However, they are helpful for the design of a bag filter and selection and development of appropriate cleanable filter media, and for the identification of suitable operating parameters.

2 Normative references

The following documents, in whole or in part, are normatively referenced in this document and are indispensable for the application of this document. For dated references, only the edition cited applies. For undated references, the latest edition of the referenced document (including any amendments) applies.

ISO 4606, *Textile glass — Woven fabrics — Determination of tensile breaking force and elongation at breaking by strip method*

ISO 13934-1, *Textiles — Tensile properties of fabrics — Part 1: Determination of maximum force and elongation at maximum force using the strip method*[1)]

ISO 29464:2011,*Cleaning equipment for air and other gases — Terminology*

3 Terms and definitions

For the purposes of this document, the terms and definitions given in ISO 29464:2011 and the following apply.

3.1
aged filter sheet
filter sheet exposed under simulated hot and corrosive gas conditions for a preset period of time to evaluate the change of filter properties

3.2
air permeability
gas volume flow rate per unit filtration area at pressure drop of 124,5 Pa

3.3
average gas concentration
mean concentration of test gases during the exposure

1) This International Standard replaced ISO 5081, *Textiles — Woven fabrics — Determination of breaking strength and elongation (Strip method).*

© ISO 2016 – All rights reserved

Documents
Document Sharing Hub
Full document details: BS EN ISO 16891:2016

3.4
batch type exposure chamber
chamber in which filter sheets are exposed to stationary test gas mixture

3.5
chemical degradation
degradation of chemical properties of filter media by the interaction with test gases

3.6
cleanable filter
filter designed to enable the removal of collected dust by appropriate technique

[SOURCE: ISO 29464:2011; 3.1.77]

3.7
continuous-flow-method
exposing method of filter sheet, which is exposed in a continuous flow of test gas mixture

3.8
corrosive gas
chemicals which react with filter media and change its chemical and physical properties

3.9
degradation
change in physical and chemical performances of filter media by the interaction with corrosive gases

3.10
elongation
incremental change in length of test specimen by tensile test

3.11
elongation at maximum load
incremental change in length of test specimen at maximum load in tensile test

3.12
elongation ratio
ratio of elongation of test specimen to its initial length between holders or its percentage

3.13
elongation ratio at maximum load
ratio of elongation of test specimen at maximum load in tensile test to its initial length between holders

3.14
exposure chamber
chamber to expose test filter sheet to corrosive gases

3.15
filter media
material separating particulate matter from gases and characterized by its separating structure and its structural and/or textile-technological characteristics

3.16
flow-through type replacement
method to replace test gas in the batch type exposure chamber by introducing test gas continuously to the chamber

3.17
initial load
initial load applied on the test specimen at the start of tensile test

© ISO 2016 – All rights reserved
Documents
Document Sharing Hub
Full document details: BS EN ISO 16891:2016

3.18
length between holders
length between holders of top and bottom holding chucks positioned at the start of the tensile test

Note 1 to entry: See Figure 3.

3.19
load
tensile strength of test specimen observed in the tensile test

3.20
non-continuous-flow-method
exposing method of filter sheet, which is exposed in still test gas mixture

3.21
nonwoven fabric
filter media using fabric made from long fibres, bonded together with each other by chemical, mechanical, heat or solvent treatment

3.22
number of replacement
number of test gas replacement for whole heating space volume of the test chamber

3.23
replacement of gas
exchange gas to maintain test gas concentration within certain concentration range

3.24
retention of tensile strength
ratio of tensile strength of the test specimen subjected to thermal and/or acid gas exposure to that of the test specimen without the exposure

3.25
strip method
method of implementing tensile test with holding whole width of the test specimen with a holding device

3.26
tensile speed
speed to pull a test specimen in tensile test

3.27
tensile strength
value of the maximum load divided by the width of test specimen

3.28
test gas
gas which may cause changes in physical propertied of filter media to be used for tensile test

3.29
vacuum replacement
method to replace test gas in the batch type exposure chamber by the use of vacuum

3.30
thermal exposure
expose filter media at an elevated temperature to accelerate the change of its physical properties

3.31
woven fabric
filter media using a fabric formed by weaving

© ISO 2016 – All rights reserved

Documents
Document Sharing Hub
Full document details: BS EN ISO 16891:2016

4 Symbols and abbreviated terms

A	total surface area in a filter media	(m^2)
APA	nonwoven fabric with Aromatic Polyamide fibres	
C	gas concentration	($mg \bullet m^{-3}$)
$F(A)$	constant related to total surface area of filter media	($N \bullet mm^{-1}$)
Glass	fabric with Glass fibres	
K	effective reaction constant	(s^{-1})
k	reaction constant	($m^3 \bullet mg^{-1} \bullet s^{-1}$)
L_1	length of specimen	(mm)
L_2	length between holders	(mm)
L_3	length of holder	(mm)
MD	machine direction	
P	load	(N)
P_{max}	maximum load	(N)
p	pressure	(Pa)
PI	nonwoven fabric with Polyimide	
PPS	nonwoven fabric with Polyphenylene Sulfide	
PTFE	nonwoven fabric with Polytetrafluoroethylene	
Q	flow rate of test gas	($l \bullet min^{-1}$)
q	air permeability of filter	[($cm^3 \bullet s^{-1}$) $\bullet cm^{-2}$]
S	tensile speed	($mm \bullet min^{-1}$)
T	temperature	(°C)
TD	transverse direction	
t	exposure time	(s),(h)
V	volume of the exposure chamber	(l)
w	width of holder	(mm)
δ	elongation	(mm)
δ_{max}	elongation at maximum load	(mm)
ε	elongation ratio	(%)
ε_{max}	maximum elongation ratio	(%)
τ	tensile strength	($N \bullet mm^{-1}$)

© ISO 2016 – All rights reserved
Documents
Document Sharing Hub
Full document details: BS EN ISO 16891:2016

τ_0	tensile strength of the filter media without exposure	(N•mm^{-1})
$\Delta\tau$	tensile strength difference between after and before exposure	(N•mm^{-1})

5 Principle

Physical performance of filter media mostly degrades with time because of long time exposure under severe gas conditions, such as hot and/or corrosive gas conditions. When filter media is exposed to hot and/or corrosive gas atmospheres such as NOx, SOx, HCl and moisture etc., those gases are considered to interact with materials in fibres and thus affect crystallinity and/or other bonding of molecules in fibres, i.e., they decompose fibre in the media to some extent. Hence, these conditions result in irreversible damage to media and weaken physical performances like tensile strength, elongation and so on.

Details of the above mentioned process have not been understood well yet, but tensile strength after filter media is exposed to corrosive gases and/or high temperature is expressible by the following formula with the assumption that degradation reaction between corrosive gas and some reactive component in a fibre is pseudo linear.

$$\tau(0) - \tau(t) = \Delta\tau = F(A)\left[1 - \exp(-Kt)\right] \tag{1}$$

where

$T(t)$	tensile strength of filter media;
$F(A)$	unknown constant related to total surface area of filter media;
K	effective reaction constant and is related to the degradation of media.

The first derivative of Formula (1) becomes,

$$\frac{d\Delta\tau}{dt} = -\frac{d\tau}{dt} = KF(A)\exp(-Kt) \tag{2}$$

Similar formula can be obtained applying Hooke's law between tensile strength and elongation as:

$$\frac{d\Delta\delta}{dt} \propto KF(A)\exp(-Kt) \tag{3}$$

Formula (2) and Formula (3) suggest that a straight line is obtained when the logarithm of first derivative of tensile strength of filter media and elongation is plotted against exposure time t in a semi-log paper, as shown in Figure 1. The slope of the line in Figure 1 gives K [see the details of the derivation of Formula (2) and Formula (3) in Annex C].

© ISO 2016 – All rights reserved

Documents
Document Sharing Hub
Full document details: BS EN ISO 16891:2016

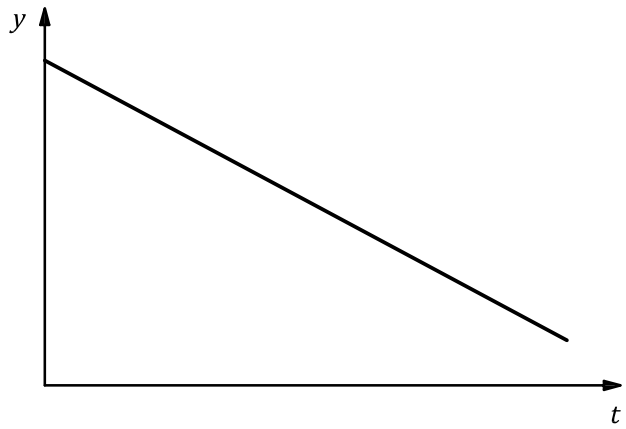

Key

t exposure time (h)

y $lg(-d\tau/dt)$

Figure 1 — Relation between gradient of tensile strength of filter media and exposure time to corrosive gas

The degradation process is usually very slow, and thus, measurable changes in the physical properties (like tensile strength and elongation) usually appear after filter media has been exposed for a very long time period. Hence, it shall be accelerated by some means to evaluate the effect through an experiment.

In this International Standard, degradation is accelerated by exposing filter media to a higher corrosive gas concentration and higher gas temperature.

6 Test specimen, equipment and test procedure

6.1 General

The test specimen, equipment and procedure at each step shall be chosen so as to ensure good reproducibility and repeatability of the test. The equipment to prepare the samples for the measurement generally consists of the following main components: gas supply system; exposure chamber and heating system; exhaust gas treatment unit; vacuum pump; and gas analysing system. Figure 2 shows a schematic diagram of the equipment.

The test shall be carried out using the following three steps:

Step 1: Preparation of filter sample sheets for gas exposure

Air permeability of filter sample sheets for gas exposure shall be similar, so as to obtain reliable data (described in 6.2). Air permeability of filter media with a size defined in 6.2.3 shall be measured and suitable sheets selected based upon the measured air permeability.

Step 2: Exposure of sheets

Sheets selected at Step 1 shall be exposed to thermal and/or corrosive gas conditions (described in 6.3 and 6.4).

Step 3: Tensile test

Tensile specimens of machine direction (MD) and transverse direction (TD) shall be cut from exposed sheets. Then tensile strength and elongation of specimens shall be measured by the scheme described in Clause 7.

© ISO 2016 – All rights reserved
Documents
Document Sharing Hub
Full document details: BS EN ISO 16891:2016

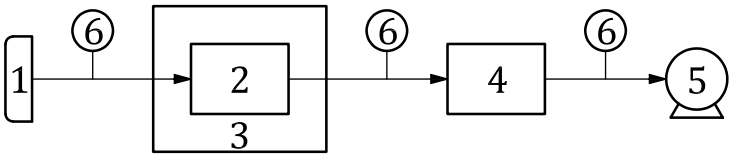

Key

1 gas supply
2 exposure chamber
3 heating system
4 gas treatment
5 vacuum pump
6 gas analysis

Figure 2 — Schematic diagram of equipment to prepare sample for physical performance test

6.2 Preparation of sheets for gas exposure

6.2.1 Shape and size of tensile specimen

A rectangular shape without shoulders between holders shall be adopted in tensile tests as shown in Figure 3, since filter media is soft and porous. Hence the size of the sheet of filter media to expose shall be large enough for the tensile test to obtain reliable and reproducible data. According to the results shown in Annex D, the measured tensile strength of nonwoven filter media with a rectangular test sheet does not depend on the width of holder w, in the range from 20 mm to 50 mm and length between holders L_2, from 80 mm to 120 mm (see Annex D). Hence, in this International Standard, a rectangular shape with w = 25 mm width and L_2 = 100 mm in length between holders shall be adopted and other dimensions are determined as L_3 = 50 mm, L_1 = 200 mm.

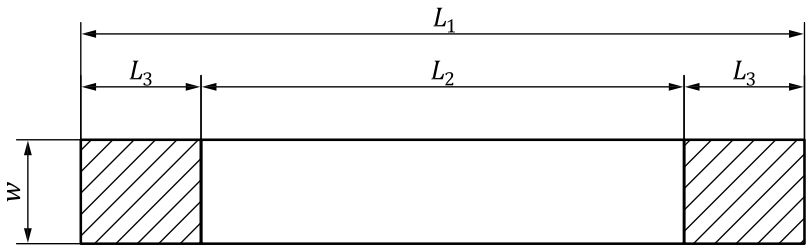

Key

L_1 length of specimen
L_2 length between holders
L_3 length of holder
w width of holder

Figure 3 — Shape of tensile specimen

6.2.2 Sample sheet for exposure

To deteriorate every filter sheet equally, test gases shall have contact with all fibres in the filter for the whole exposure period. Therefore, a continuous-flow-through type of test gas flow shall be adopted. Here, in the continuous-flow-method, the test gas flow through sheets during whole the exposure period is the same as during actual bag filter operation. Test gases used for the exposure are corrosive except O_2, and, thus, it is important to minimize gas consumption not only because of the cost of gas but also for safety reasons. The sample sheet holder and flow rate for the exposure is specified in 6.3.

© ISO 2016 – All rights reserved

Documents
Document Sharing Hub
Full document details: BS EN ISO 16891:2016

Based on these considerations, the size of the sheet to be exposed to test gases was determined as 105 mm × 250 mm, in which test gas flows through the central part with an area of 65 mm × 210 mm, which shall be large enough to cut two tensile test specimens of 25 mm × 210 mm, as shown in Figure 4. Sample sheets shall be cut with the size of 105 mm × 250 mm in the central part of the filter media roll with at least four sheets for each direction.

Dimension in mm

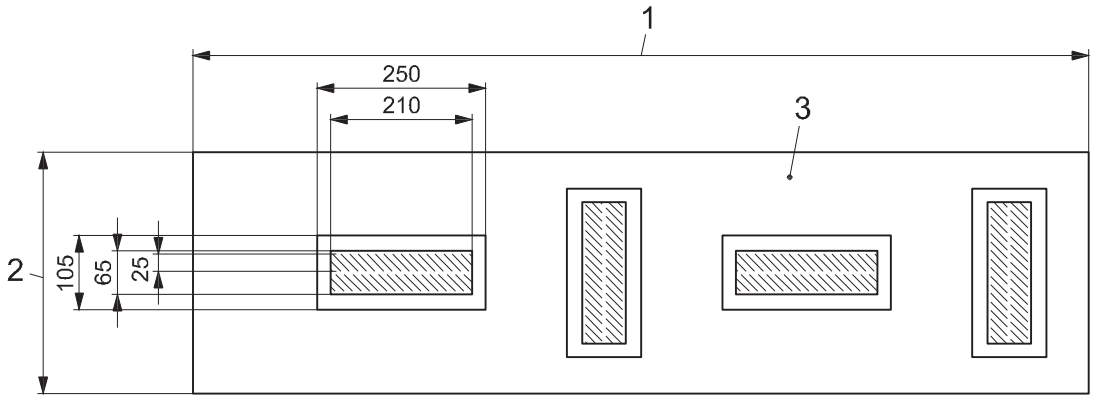

Key

1 MD

2 TD

3 filter media

Figure 4 — Preparation of sample sheet for test gas exposure

6.2.3 Selection of sample sheet through air permeability measurement

The tensile strength of a specimen strongly depends on the structure of the specimen. Nonwoven filter media is composed of bonded entangling fibres. They distribute uniformly macroscopically but not microscopically because of manufacturing mechanism and it results in the unevenness of packing density or mass of fibres. Unevenness of fibre distribution in the filter, i.e. filter structure, can change physical properties such as tensile strength and/or elongation, air permeability and so on. In this sense, it is essential to eliminate filter media with different structures from the test to avoid the fluctuation of measured data due to the unevenness of filter structure. Hence, by sample sheets with similar structure shall be selected before they are exposed to test gases structure. However, it is difficult to select from the product information about the media given by manufacturer, i.e. it is usually limited to mean value of air permeability and mass of fibres per unit area of the filter. However, air permeability of filter media is the same when the filter structure is the same. This means that filter media with similar structures show a similar air permeability so that air permeability can be used for the selection of filter media with a similar structure. Hence at least four sample sheets for gas exposure shall be selected according to the air permeability of each sheet. Air permeability of each sheet shall be within ±10 % from the mean air permeability of the filter media specified by the manufacturer.

6.2.4 Filter media for exposure

In the range of this International Standard, any nonwoven filter media made of synthetic fibres can be used for the test, since degradation is evaluated by the change of tensile strength and elongation of the media.

© ISO 2016 – All rights reserved
Documents
Document Sharing Hub
Full document details: BS EN ISO 16891:2016

6.3 Sample preparation

6.3.1 Exposure system

In the practical bag filtration, hot and/or corrosive gases, of course, flow through filter media and thus, every fibre in the filter is exposed to corrosive gas at the same concentration so that degradation takes place evenly regardless of the location in the filter, i.e. not only its surface but also its inside.

The purpose of exposing filter media to hot and/or corrosive gas conditions is to accelerate the change of physical performances of the media by satisfying certain contact between every fibre in the filter media and corrosive gas, i.e. to prepare an aged filter sample. To meet these requirements, a gas temperature and through type chamber shall be adopted for the sample sheet exposing method. This is a continuous-flow-through method and the test gas flows continuously in and out the chamber. The sample sheets are placed in the chamber like a barrier to block the test gas flow rate. Hence, the test gas flows through the inner space of the media and thus contacts with all fibres during its passage through the sheets. Since contact time between fibres and the test gas is short even at a very slow gas stream, the consumption of test gas by the interaction with fibres is considered to be small because of the low reaction rate. Therefore, the test gas concentration change from inlet concentration is considered to be small. Outlet test gas shall be exhausted directly to the atmosphere after an appropriate de-toxifying treatment, i.e. a circulating-gas type exposure system shall not be adopted, since some unknown gas components, which have some side effects, can be produced by the interaction between test gas and filter media.

Figure 5 shows an example of a continuous flow through system. It is composed of a gas supply unit, heating and exposure unit, gas concentration monitoring unit and exhaust gas cleaning unit. Test gases and balance gas are fed from gas cylinders. Moisture is generated by heating. Their flow rates, especially test gases with small flow rates, shall be precisely controlled by mass-flow-controllers to maintain test gas concentration constant. After they are mixed well at the mixing box, they are introduced to the exposure chamber in a heating system. Inlet concentration of the test gas shall be measured before and during the exposure.

NOTE Test gases are a potential hazard. If test gases leak, corrosion of material occurs and thus special care is needed.

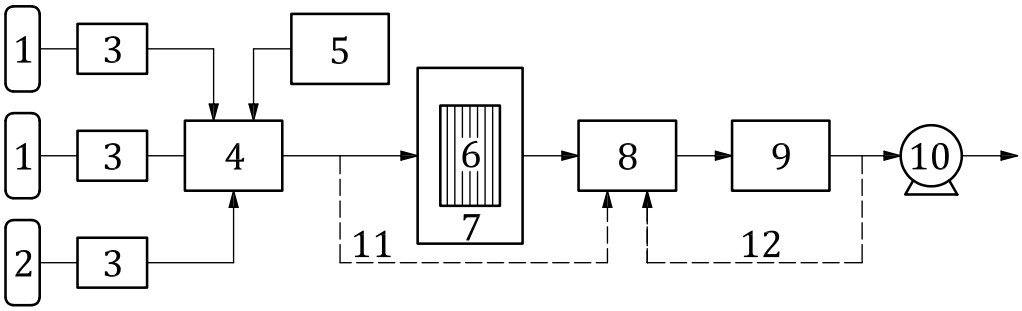

Key

1	test gas	7	heating system
2	balance gas	8	gas analyzer
3	mass flow controller	9	gas treatment device
4	mixing box	10	pump
5	moisture generator	11	gas line for inlet gas concentration measurement
6	expose chamber with filter sample sheets	12	gas line for gas concentration measurement for exhaust gas

Figure 5 — Example of continuous flow through type setup for exposure test

Figure 6 shows an example of an exposure chamber which is placed in the heating system. The chamber to install the sample case (shown in Figure 7) shall be an airtight box with inlet and outlet pipes and temperature sensors. The sample case is composed of a case and a frame plate, and shall have the

© ISO 2016 – All rights reserved

AVA Documents Document Sharing Hub
Full document details: BS EN ISO 16891:2016