BS EN ISO 17450-1:2011

BSI Standards Publication

Geometrical product specifications (GPS) — General concepts

Part 1: Model for geometrical specification and verification (ISO 17450-1:2011)

bsi.

...making excellence a habit.™

Document Sharing Hub

Full document details: BS EN ISO 17450-1:2011

National foreword

This British Standard is the UK implementation of EN ISO 17450-1:2011. It supersedes DDCENISO/TS17450-1:2007 which is withdrawn.

The UK participation in its preparation was entrusted to Technical Committee TDW/4, Technical Product Realization.

A list of organizations represented on this committee can be obtained on request to its secretary.

This publication does not purport to include all the necessary provisions of a contract. Users are responsible for its correct application.

© The British Standards Institution 2012

ISBN 978 0 580 66730 5

ICS 17.040.01

Compliance with a British Standard cannot confer immunity from legal obligations.

This British Standard was published under the authority of the Standards Policy and Strategy Committee on 31 January 2012.

Amendments issued since publication

Date	Text affected

Documents
Document Sharing Hub

Full document details: BS EN ISO 17450-1:2011

EUROPEAN STANDARD

NORME EUROPÉENNE

EUROPÄISCHE NORM

EN ISO 17450-1

December 2011

ICS 17.040.01

Supersedes CEN ISO/TS 17450-1:2007

English Version

Geometrical product specifications (GPS) - General concepts - Part 1: Model for geometrical specification and verification (ISO 17450-1:2011)

Spécification géométrique des produits (GPS) - Concepts généraux - Partie 1: Modèle pour la spécification et la vérification géométriques (ISO 17450-1:2011)

Geometrische Produktspezifikation (GPS) - Grundlagen - Teil 1: Modell für die geometrische Spezifikation und Prüfung (ISO 17450-1:2011)

This European Standard was approved by CEN on 10 December 2011.

CEN members are bound to comply with the CEN/CENELEC Internal Regulations which stipulate the conditions for giving this European Standard the status of a national standard without any alteration. Up-to-date lists and bibliographical references concerning such national standards may be obtained on application to the CEN-CENELEC Management Centre or to any CEN member.

This European Standard exists in three official versions (English, French, German). A version in any other language made by translation under the responsibility of a CEN member into its own language and notified to the CEN-CENELEC Management Centre has the same status as the official versions.

CEN members are the national standards bodies of Austria, Belgium, Bulgaria, Croatia, Cyprus, Czech Republic, Denmark, Estonia, Finland, France, Germany, Greece, Hungary, Iceland, Ireland, Italy, Latvia, Lithuania, Luxembourg, Malta, Netherlands, Norway, Poland, Portugal, Romania, Slovakia, Slovenia, Spain, Sweden, Switzerland and United Kingdom.

EUROPEAN COMMITTEE FOR STANDARDIZATION
COMITÉ EUROPÉEN DE NORMALISATION
EUROPÄISCHES KOMITEE FÜR NORMUNG

Management Centre: Avenue Marnix 17, B-1000 Brussels

© 2011 CEN All rights of exploitation in any form and by any means reserved worldwide for CEN national Members.

Ref. No. EN ISO 17450-1:2011: E

Documents
Document Sharing Hub

Full document details: BS EN ISO 17450-1:2011

Foreword

This document (EN ISO 17450-1:2011) has been prepared by Technical Committee ISO/TC 213 "Dimensional and geometrical product specifications and verification" in collaboration with Technical Committee CEN/TC 290 “Dimensional and geometrical product specification and verification” the secretariat of which is held by AFNOR.

This European Standard shall be given the status of a national standard, either by publication of an identical text or by endorsement, at the latest by June 2012, and conflicting national standards shall be withdrawn at the latest by June 2012.

Attention is drawn to the possibility that some of the elements of this document may be the subject of patent rights. CEN [and/or CENELEC] shall not be held responsible for identifying any or all such patent rights.

This document supersedes CEN ISO/TS 17450-1:2007.

According to the CEN/CENELEC Internal Regulations, the national standards organizations of the following countries are bound to implement this European Standard: Austria, Belgium, Bulgaria, Croatia, Cyprus, Czech Republic, Denmark, Estonia, Finland, France, Germany, Greece, Hungary, Iceland, Ireland, Italy, Latvia, Lithuania, Luxembourg, Malta, Netherlands, Norway, Poland, Portugal, Romania, Slovakia, Slovenia, Spain, Sweden, Switzerland and the United Kingdom.

Endorsement notice

The text of ISO 17450-1:2011 has been approved by CEN as a EN ISO 17450-1:2011 without any modification.

Documents
Document Sharing Hub

Full document details: BS EN ISO 17450-1:2011

Contents

Page

Foreword iv
Introduction v
1 Scope 1
2 Normative references 1
3 Terms and definitions 1
4 Application and future prospects 11
5 General 11
6 Features 12
6.1 General 12
6.2 Ideal features 13
6.3 Non-ideal features 15
6.4 Relationships between geometrical feature terms 16
7 Characteristics 18
7.1 General 18
7.2 Intrinsic characteristics of ideal features 18
7.3 Situation characteristics between ideal features 19
7.4 Situation characteristics between non-ideal and ideal features 20
8 Operations 21
8.1 Feature operations 21
8.2 Evaluation 25
8.3 Transformation 26
9 Specification 26
9.1 General 26
9.2 Specification by dimension 26
9.3 Specification by zone 27
9.4 Deviation 27
10 Verification 28
Annex A (informative) **Examples of applications to ISO 1101** 29
Annex B (informative) **Mathematical symbols and definitions** 43
Annex C (informative) **Comparison between tolerancing and metrology** 55
Annex D (informative) **Concept diagram for characteristics** 57
Annex E (informative) **Invariance classes** 58
Annex F (informative) **Relationship to the GPS matrix model** 60
Bibliography 62
Alphabetical index 63

© ISO 2011 – All rights reserved

Documents
Document Sharing Hub
Full document details: BS EN ISO 17450-1:2011

Foreword

ISO (the International Organization for Standardization) is a worldwide federation of national standards bodies (ISO member bodies). The work of preparing International Standards is normally carried out through ISO technical committees. Each member body interested in a subject for which a technical committee has been established has the right to be represented on that committee. International organizations, governmental and non-governmental, in liaison with ISO, also take part in the work. ISO collaborates closely with the International Electrotechnical Commission (IEC) on all matters of electrotechnical standardization.

International Standards are drafted in accordance with the rules given in the ISO/IEC Directives, Part 2.

The main task of technical committees is to prepare International Standards. Draft International Standards adopted by the technical committees are circulated to the member bodies for voting. Publication as an International Standard requires approval by at least 75 % of the member bodies casting a vote.

Attention is drawn to the possibility that some of the elements of this document may be the subject of patent rights. ISO shall not be held responsible for identifying any or all such patent rights.

ISO 17450-1 was prepared by Technical Committee ISO/TC 213, *Dimensional and geometrical product specifications and verification*.

This first edition of ISO 17450-1 cancels and replaces ISO/TS 17450-1:2005, which has been technically revised. It also incorporates the Technical Corrigendum ISO/TS 17450-1:2005/Cor.1:2007.

ISO 17450 consists of the following parts, under the general title *Geometrical product specifications (GPS) — General concepts*:

— *Part 1: Model for geometrical specification and verification*

— *Part 2: Basic tenets, specifications, operators, uncertainties and ambiguities*

© ISO 2011 – All rights reserved
Documents
Document Sharing Hub
Full document details: BS EN ISO 17450-1:2011

Introduction

This part of ISO 17450 is a geometrical product specification (GPS) document and is to be regarded as a global GPS document (see ISO/TR 14638). It influences all chain links of the chains of standards.

The ISO/GPS Masterplan given in ISO/TR 14638 gives an overview of the ISO/GPS system of which this document is a part. The fundamental rules of ISO/GPS given in ISO 8015 apply to this document and the default decision rules given in ISO 14253-1 apply to specifications made in accordance with this document, unless otherwise indicated. For more detailed information on the relationship of this part of ISO 17450 to other standards and to the GPS matrix model, see Annex F.

In a market environment of increased globalization, the exchange of technical product information is of high importance and the need to express unambiguously the geometry of mechanical workpieces of vital urgency. Consequently, codification associated with the macro- and micro-geometry of workpiece specifications needs to be unambiguous and complete if the functional geometrical variation of parts is to be limited; in addition, the language ought to be applicable to CAx systems.

The aim of ISO/TC 213 is to provide the tools for a global and “top-down” approach to GPS. These tools form the basis of new standards specifying a common language for geometrical definition. This language can be used by design (assemblies and individual workpieces), manufacturing and inspection, to describe the measurement procedure, regardless of the media (e.g. a paper drawing, numerical drawing or exchange file) used. The tools are based on the characteristics of features, as well as on the constraints between the features and on feature operations, used for the creation of different geometrical features.

© ISO 2011 – All rights reserved

Documents
Document Sharing Hub
Full document details: BS EN ISO 17450-1:2011

Documents
Document Sharing Hub

INTERNATIONAL STANDARD ISO 17450-1:2011(E)

Geometrical product specifications (GPS) — General concepts —

Part 1:
Model for geometrical specification and verification

1 Scope

This part of ISO 17450 provides a model for geometrical specification and verification and defines the corresponding concepts. It also explains the mathematical basis of the concepts associated with the model and defines general terms for geometrical features of workpieces.

This part of ISO 17450 defines the fundamental concepts for the GPS system in order to:

— provide nonambiguous GPS language to be used in design, manufacturing and verification,

— identify features, characteristics and rules to provide the basis for specifications,

— provide a complete symbology language to indicate GPS specifications,

— provide simplified symbology by defining default rules, and

— provide consistent rules for verification.

2 Normative references

The following referenced documents are indispensable for the application of this document. For dated references, only the edition cited applies. For undated references, the latest edition of the referenced document (including any amendments) applies.

ISO/IEC Guide 99, *International vocabulary of metrology — Basic and general concepts and associated terms (VIM)*

3 Terms and definitions

For the purposes of this document, the terms and definitions given in ISO/IEC Guide 99 and the following apply.

3.1
real surface
⟨of a workpiece⟩ set of features which physically exist and separate the entire workpiece from the surrounding medium

© ISO 2011 – All rights reserved

Documents
Document Sharing Hub
Full document details: BS EN ISO 17450-1:2011

3.2
surface model
model representing the set of physical limits of the virtual or the real workpiece

NOTE 1 This model applies to all closed surfaces.

NOTE 2 The surface model allows the definition of single features, sets of features, and/or portions of features. The total product is modelled by a set of surface models corresponding to each workpiece.

3.2.1
nominal model
⟨of a workpiece⟩ model of the perfect shape defined by the designer

NOTE The nominal model represents the design intent.

3.2.2
non-ideal surface model
skin model
⟨of a workpiece⟩ model of the physical interface of the workpiece with its environment

NOTE See Clause 5.

3.3
geometrical feature
point, line, surface, volume or a set of these items

NOTE 1 The non-ideal surface model is a particular type of geometrical feature, corresponding to the infinite set of points defining the interface between the workpiece and its surroundings.

NOTE 2 A geometrical feature can be an ideal feature or a non-ideal feature, and can be considered as either a single feature or a compound feature.

3.3.1
ideal feature
feature defined by a parametrized equation

NOTE 1 The expression of the parametrized equation depends on the type of ideal feature and on its intrinsic characteristics.

NOTE 2 By default, an ideal feature is infinite. To change its nature, it is appropriate to specify this by adding the term “restricted” as in “restricted ideal feature”.

3.3.1.1
attribute of an ideal feature
property intrinsically attached to an ideal element

NOTE 1 Four levels of attributes can be defined for an ideal feature: 1) shape; 2) dimensional parameters from which a size can be defined in the case of dimensional feature; 3) situation feature; and 4) skeleton (when the size is set equal to zero).

NOTE 2 If the ideal feature is a feature of size, then one of parameters of the shape can be considered as a size.

3.3.1.1.1
dimensional parameter
linear or angular dimension of an ideal feature used in the expression of its parametrized equation

NOTE A dimensional parameter can correspond to a size of a feature of size.

3.3.1.1.2
skeleton feature
geometrical feature resulting from the reduction of a feature of size when its size is set equal to zero

© ISO 2011 – All rights reserved
Documents
Document Sharing Hub
Full document details: BS EN ISO 17450-1:2011

NOTE 1 In the nominal model, the skeleton feature is a geometrical attribute of a nominal integral feature. A nominal integral feature and its skeleton belong to the same invariance class and have the same situation feature.

NOTE 2 In the non-ideal feature, several possible skeleton features exist for the same integral feature.

EXAMPLE In case of a torus, there are two dimensional parameters, one of which is a size (the small diameter of the torus). Its skeleton is a circle; its situation features are a plane (containing the circle) and a point (centre of the circle).

3.3.1.1.3
situation feature
point, straight line, plane or helix, from which the location and/or orientation of a geometrical feature can be defined

See Figures 1 to 4.

NOTE 1 A situation feature is a geometrical attribute of an ideal feature.

NOTE 2 No dimensional parameters are linked to a situation feature.

NOTE 3 In many cases, instead of using the situation helix, the axis of a situation helix is used.

EXAMPLE In the case of a torus, there are two dimensional parameters, one of which is a size (the small diameter of the torus). Its skeleton is a circle and its situation features are a plane (containing the circle) and a point (centre of the circle).

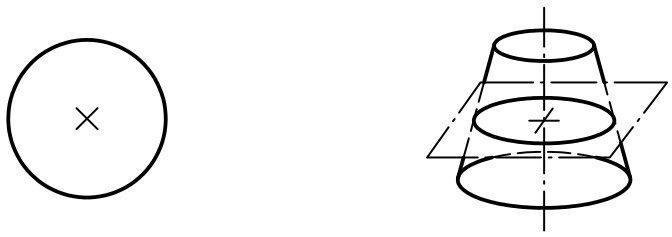

a) Situation point for a sphere **b) Situation point for a cone**

Figure 1 — Example of situation points

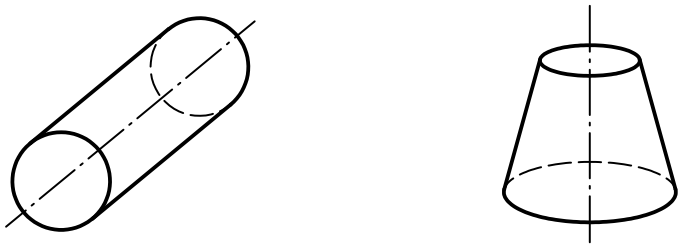

a) Situation straight line for a cylinder **b) Situation straight line for a cone**

Figure 2 — Example of situation straight lines

© ISO 2011 – All rights reserved

Documents
Document Sharing Hub
Full document details: BS EN ISO 17450-1:2011

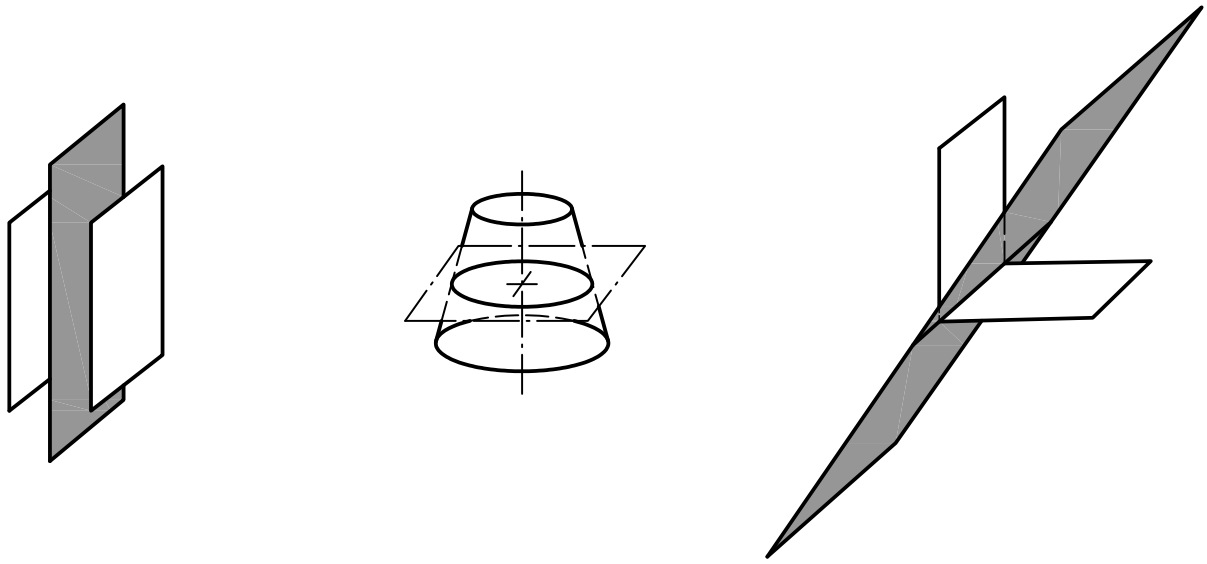

a) Situation plane for a plane pair **b) Situation plane for a cone** **c) Situation plane for two non-parallel planes**

Figure 3 — Examples of situation planes

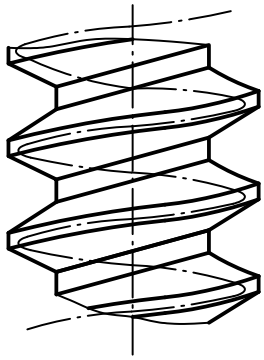

Figure 4 — Example of a situation helix

3.3.1.1.4
shape
⟨of an ideal feature⟩ mathematical generic description defining the ideal geometry of a feature

NOTE An ideal feature of preset shape can be qualified or named.

EXAMPLE 1 Planar shape, cylindrical shape, spherical shape, conical shape.

EXAMPLE 2 A surface can be qualified as a “plane surface” or be directly named “plane”.

3.3.1.2
invariance class
group of ideal features defined by the same displacement(s) of the ideal feature for which the feature is kept identical in the space

NOTE See Annex E.

© ISO 2011 – All rights reserved
Documents
Document Sharing Hub
Full document details: BS EN ISO 17450-1:2011

3.3.1.3
type
⟨of an ideal feature⟩ name given for a set of shapes of an ideal feature

NOTE 1 See Tables 2 and 5.

NOTE 2 From a type of an ideal feature, a particular feature can be defined by giving value(s) to intrinsic characteristic(s).

NOTE 3 The type defines the parametrized equation of the ideal feature.

3.3.1.4
nature
⟨of an ideal feature⟩ property of an ideal feature to be a point, a line, a surface, or a volume or a set of these items

EXAMPLE The nature of a cylinder is a surface. The content of a sphere is a volume.

3.3.1.5
feature of size
feature of linear size or feature of angular size

3.3.1.5.1
feature of linear size
feature of size with linear size
geometrical feature, having one or more intrinsic characteristics, only one of which may be considered as a variable parameter, that additionally is a member of a “one parameter family”, and obeys the monotonic containment property for that parameter

See Figure 5.

NOTE 1 A feature of size can be a sphere, a circle, two straight lines, two parallel opposite planes, a cylinder, a torus, etc. In former standards, wedges and cones were considered as features of size, and torus size was not mentioned.

NOTE 2 There are restrictions when there are more than one intrinsic characteristic (e.g. torus).

NOTE 3 A feature of size is particularly useful for the expression of material requirements, i.e. least material requirement (LMR) and maximum material requirement (MMR).

NOTE 4 In Figure 5, the diameter of the sphere is an example of a size of a feature of linear size; the geometrical feature used to establish the feature of size is its skeleton feature. In the case of the sphere, the skeleton feature is a point.

EXAMPLE 1 A single cylindrical hole or shaft is a feature of linear size. Its linear size is its diameter.

EXAMPLE 2 A compound feature consisting of two single parallel planes such as a groove or a key is a feature of linear size. Its linear size is its width.

© ISO 2011 – All rights reserved

Documents
Document Sharing Hub
Full document details: BS EN ISO 17450-1:2011

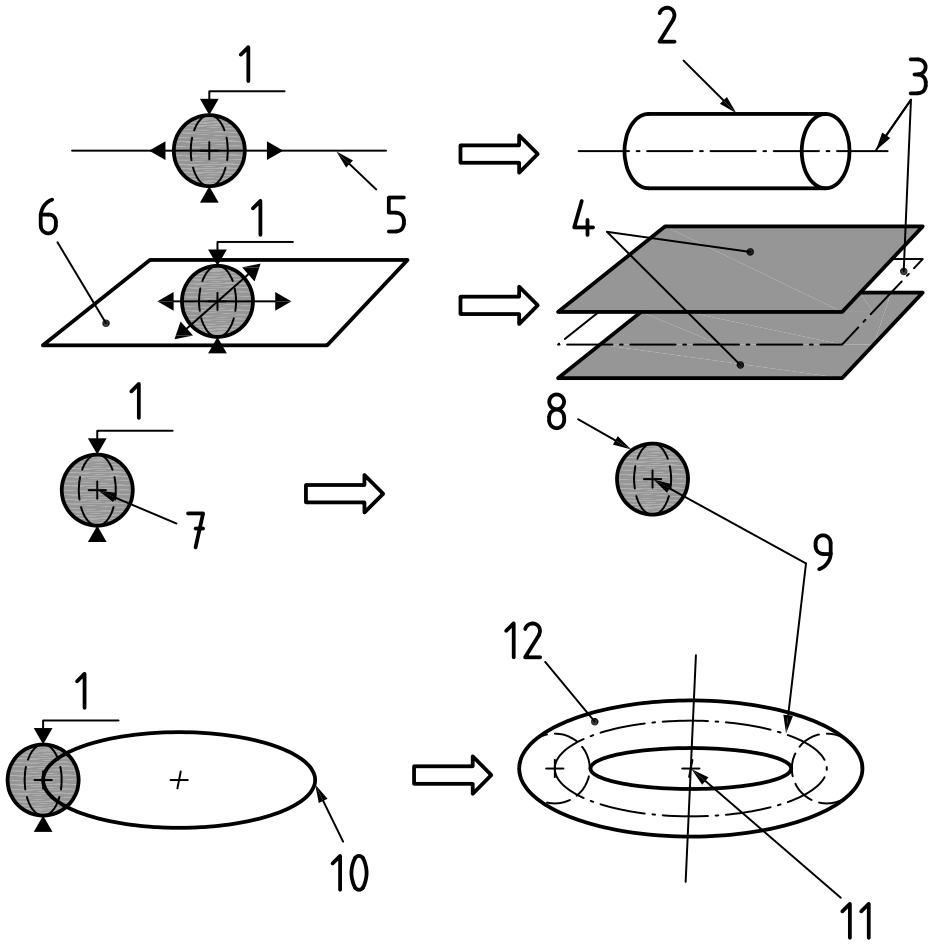

Key

1 size
2 cylinder
3 median feature
4 two opposite planes
5 skeleton: a straight line
6 skeleton: a plane
7 skeleton: a point
8 sphere
9 median feature
10 skeleton: a circle
11 situation feature
12 torus

Figure 5 — Relation between the feature of size, the skeleton feature and the size

3.3.1.5.2
feature of angular size
geometrical feature belonging to the revolute invariance class whose genetrix is inclined nominally with an angle not equal to 0° or 90° or belonging to the prismatic invariance class and composed by two surfaces of same shape the angle between the two situation features

NOTE A cone and a wedge are features of angular size.

© ISO 2011 – All rights reserved
Documents
Document Sharing Hub
Full document details: BS EN ISO 17450-1:2011

3.3.2
non-ideal feature
imperfect geometrical feature fully dependent on the non-ideal surface model or on the real surface of the workpiece

NOTE A non-ideal feature is by default of finite dimension.

3.3.3
nominal feature
ideal feature defined in the technical product documentation by the product designer

NOTE 1 A nominal feature is defined by the technical product documentation.

NOTE 2 A nominal feature can be finite or infinite; by default, it is finite.

EXAMPLE A perfect cylinder, defined in a drawing, is a nominal feature obeying a specific mathematical formula, for which dimensional parameters are associated, and which are defined in a reference mark related to the situation feature. The situation feature of a cylinder is a line which is commonly called “its axis”. Taking this line as an axis of a Cartesian reference mark results in the formula $x^2 + y^2 = D/2$, with D being a dimensional parameter. A cylinder is a dimensional feature, whose size is its diameter D.

3.3.4
real feature
geometrical feature corresponding to a part of the workpiece real surface

3.3.5
integral feature
geometrical feature belonging to the real surface of the workpiece or to a surface model

NOTE 1 An integral feature is intrinsically defined, e.g. skin of the workpiece.

NOTE 2 For a statement of specifications, geometrical features obtained from partition of the surface model or of real surface of workpiece shall be defined. These features, called “integral features”, are models of the different physical parts of the workpiece that have specific functions, especially those in contact with adjacent workpieces.

NOTE 3 An integral feature can be identified, for example, by

— a partition of the surface model,

— a partition of another integral feature, or

— a collection of other integral features.

3.3.6
derived feature
geometrical feature, which does not exist physically on the real surface of the workpiece and which is not natively a nominal integral feature

NOTE 1 A derived feature can be established from a nominal feature, an associated feature, or an extracted feature. It is qualified respectively as a nominal derived feature, an associated derived feature, or an extracted derived feature.

NOTE 2 The centre point, the median line and the median surface defined from one or more integral features are types of derived features.

EXAMPLE 1 The centre of the sphere is a derived feature obtained from a sphere, which is itself an integral feature.

EXAMPLE 2 The median line of the cylinder is a derived feature obtained from the cylindrical surface, which is an integral feature. The axis of a nominal cylinder is a nominal derived feature (skeleton of the cylinder).

EXAMPLE 3 A geometrical feature, obtained from an integral feature by shifting of a specific amount in the normal direction outside of material, is an other type of derived feature.

© ISO 2011 – All rights reserved

Documents
Document Sharing Hub
Full document details: BS EN ISO 17450-1:2011

3.3.7
extracted feature
geometrical feature defining a set of finite number of points

NOTE 1 When the representativeness is defined by an infinite number of points, the word “extracted” is not associated with the considered terms.

NOTE 2 The concept “extracted” can apply to an integral feature or to a derived feature.

NOTE 3 An integral feature is by default an infinite representative, whereas an integral feature is extracted with a finite representative and performed in accordance with specified conventions.

3.3.8
associated feature
ideal feature established from a non-ideal surface model or from a real feature through an association operation

NOTE An associated feature can be established from an derived feature (extracted, filtered), or an integral feature (real, extracted, filtered).

3.3.9
filtered feature
non-ideal feature which is the result of a filtration of a non-ideal feature

See Figure 6.

NOTE 1 Non-ideal filtered features exist. Nominal filtered features or associated filtered features do not exist.

NOTE 2 With regards to the function, the features considered are often not directly integral features, but integral features after a filtration.

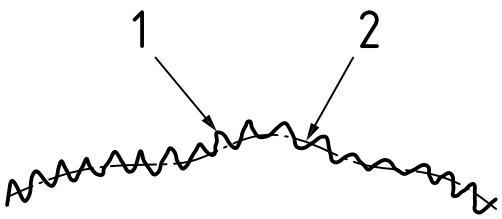

Key
1 non-ideal feature before filtration
2 filtered feature (non-ideal feature after filtration)

Figure 6 — Specification and verification filtered features

3.3.10
reconstructed feature
continuous geometrical feature defining a set of finite number of points

NOTE 1 When the representativeness is defined by an infinite number of points, the word “extracted” is not associated with the considered term.

NOTE 2 The concept “extracted” can apply to an integral feature or a derived feature.

NOTE 3 An integral feature is by default an infinite representative, whereas an integral feature is extracted with a finite representative and performed in accordance with specified conventions.

© ISO 2011 – All rights reserved
Documents
Document Sharing Hub
Full document details: BS EN ISO 17450-1:2011

3.4
operation
specific tool required to obtain features or values of characteristics, their nominal value and their limit(s)

3.4.1
feature operation
specific tool required for obtaining features

3.4.1.1
partition
feature operation used to identify a portion of a geometrical feature belonging to the real surface of the workpiece or to a surface model of the workpiece

NOTE See 8.1.2.

3.4.1.2
extraction
feature operation used to identify specific points from a non-ideal feature

NOTE 1 To avoid aliasing, filtration is, mathematically, an integral part of extraction.

NOTE 2 See 8.1.3.

3.4.1.3
filtration
feature operation used to create a non-ideal feature from a non-ideal feature or to transform one variation curve to another by reducing the level of information

NOTE See 8.1.4.

3.4.1.4
association
feature operation used to fit ideal feature(s) to non-ideal feature(s) according to a criterion

NOTE See 8.1.5.

3.4.1.5
collection
feature operation used to identify more than one geometrical feature which together play a functional role

NOTE See 8.1.6.

3.4.1.6
construction
feature operation used to build ideal feature(s) from other ideal features within constraints

NOTE See 8.1.7.

3.4.1.7
reconstruction
feature operation used to create a continuous feature from an extracted feature

NOTE See 8.1.8.

3.4.1.8
reduction
feature operation used to establish a derived feature by calculation

EXAMPLE When a centre of a geometrical feature is defined as the barycenter of an extracted integral feature, the centre is obtained by reduction.

Documents
Document Sharing Hub

© ISO 2011 – All rights reserved

Full document details: BS EN ISO 17450-1:2011

3.4.2
evaluation
operation used to identify either the value of a characteristic or its nominal value and its limit(s)

NOTE See 8.2.

3.4.3
transformation
operation used to convert one variation curve to another

NOTE See 8.3.

3.5
characteristic
single property defined from one or more geometrical feature(s)

NOTE 1 A characteristic is expressed in linear or angular units or without a unit.

NOTE 2 See Annex D.

3.5.1
intrinsic characteristic
characteristic of an ideal feature

NOTE 1 See 7.2.

NOTE 2 The intrinsic characteristics are the parameters of the parameterized equation of the ideal feature.

NOTE 3 The size of a feature of size is an intrinsic characteristic.

3.5.2
situation characteristic
characteristic defining the relative location or orientation between two features

3.5.2.1
situation characteristic between ideal features
characteristic defining the relative location or orientation between two ideal features

3.5.2.2
situation characteristic between non-ideal and ideal features
characteristic defining the relative location between a non-ideal feature and an ideal feature

3.6
specification
expression of permissible limits on a characteristic

3.6.1
specification by dimension
specification that limits the permissible value of an intrinsic characteristic or of a situation characteristic between ideal features

3.6.2
specification by zone
specification that limits the permissible variation of a non-ideal feature inside a space limited by an ideal feature or by ideal features

3.7
variation
phenomenon whereby the value of a characteristic is not constant within one geometrical feature taken from one workpiece or within a set of workpieces

Documents
Document Sharing Hub
© ISO 2011 – All rights reserved
Full document details: BS EN ISO 17450-1:2011

3.7.1
variation curve
characteristic variation represented in a coordinate system

NOTE 1 A variation curve can be obtained without transformation or by mathematical transformation. It can be qualified as direct or transformed.

NOTE 2 A variation curve can be filtered.

3.8
deviation
difference between the value of a characteristic obtained from the real surface of the workpiece or the non-ideal surface model and the corresponding nominal value

4 Application and future prospects

The surface models proposed in this part of ISO 17450 are aimed at

a) expressing the fundamental concepts on which the geometrical specification of workpieces can be based, with a global approach including all the geometrical tools (e.g. operations) needed in GPS, and

b) providing a mathematization of the concepts (see Annex B), in order to facilitate standardization inputs to

— software designers for CAD-systems,

— software designers for computing algorithms in metrology, and

— standards makers on STEP (computerized exchange of product data between CAD-systems).

NOTE Others surface models are presented in ISO 22432, and are derived from the non-ideal surface model.

5 General

The geometrical specification is the design step where the field of permissible deviations of a set of characteristics of a workpiece is stated, accommodating the required functional performance of the workpiece (functional need). It defines a level of quality in conformance with manufacturing processes, the limits permissible for manufacturing, and the definition of the conformity of the workpiece (see Figure 7).

Figure 7 — Relationship between functional needs and geometrical specification

The designer first specifies a “workpiece” with a perfect form, i.e. with the shape and dimensions necessary to meet the functional requirements. This workpiece is called the “nominal model” (see Figure 8).

This first step establishes a representation of the workpiece with only nominal values that is impossible to produce or inspect (each manufacturing or measuring process has its own variability or uncertainty).

The real surface of the workpiece, which is the physical interface of the workpiece with its environment, has an imperfect geometry; it is impossible to completely capture the dimensional variation of the real surface of the workpiece in order to completely understand the extent of all variation.

From the nominal geometry, the designer imagines a model of this real surface, which represents the variations that could be expected on the real surface of the workpiece. This model representing the imperfect geometry of the workpiece is called the “non-ideal surface model” (see Figure 9).

Documents
Document Sharing Hub

© ISO 2011 – All rights reserved

Full document details: BS EN ISO 17450-1:2011

The non-ideal surface model is used to simulate variations of the surface at a conceptual level. On this model, the designer will be able to optimize the maximum permissible limit values for which the function is downgraded but still ensured. These maximum permissible limit values define the tolerances of each characteristic of the workpiece.

NOTE This part of ISO 17450 does not include a methodology to evaluate how close the geometrical specification is to the functional specifications.

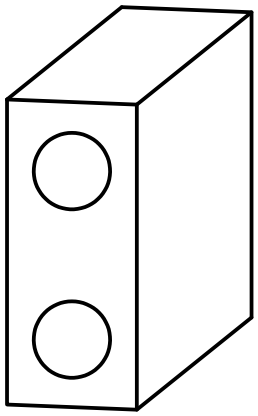

Figure 8 — Nominal model

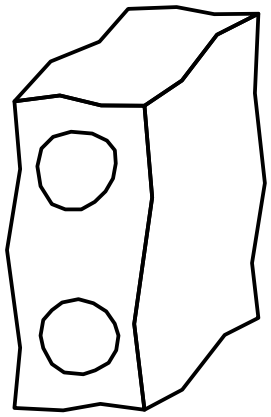

Figure 9 — Non-ideal surface model

Verification is the provision of objective evidence that the workpiece fulfils the specification.

The definition of the geometrical deviation is used to adjust the manufacturing process.

The metrologist begins by reading the specification, taking into account the non-ideal surface model, in order to know the specified characteristics. From the real surface of the workpiece, the metrologist defines the individual steps of the verification plan, depending on the measuring equipment.

Conformance is then determined by comparing the specified characteristics with the result of measurement (see Figure 10).

Geometrical specification ——— **Quantity (to be measured)** ——— **Result of measurement**

Figure 10 — Relationship between geometrical specification and result of measurement

6 Features

6.1 General

According to the definition of a geometrical feature, its nature is a point, line, surface or volume.

Two kinds of geometrical features can be distinguished:

a) ideal features (see 6.2);

b) non-ideal features (see 6.3).

© ISO 2011 – All rights reserved
Documents
Document Sharing Hub
Full document details: BS EN ISO 17450-1:2011

6.2 Ideal features

6.2.1 Ideal features are defined by type and by intrinsic characteristics.

An ideal feature is generally referred to by its type, for example, straight line, plane, cylinder, cone, sphere or torus.

Characteristics are discussed in Clause 7. An example of an intrinsic characteristic is the diameter of a cylinder.

6.2.2 Ideal features used to define the nominal model are called “nominal features”. These are independent of the non-ideal surface model.

Ideal features, the characteristics of which are dependent on the non-ideal surface model, are called “associated features”.

For instance, the nominal model shown in Figure 11 is built with several ideal features of two types (plane and cylinder). The locations and orientations between the features are given by situation characteristics, and the diameters of the cylinders are given by intrinsic characteristics (see Clause 7).

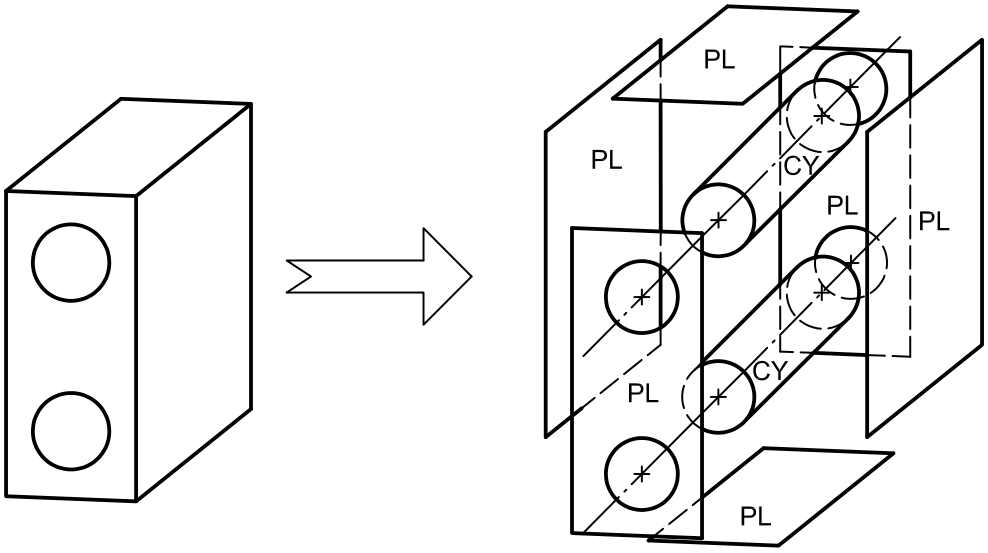

a) Nominal model **b) Ideal features of types plane (PL) and cylinder (CY) constituting the nominal model**

Figure 11 — Building the nominal model

6.2.3 Ideal features can have an infinite extent or a finite extent:

— nominal features have a finite extent;

— associated features have by default an infinite extent else they are qualified with restricted (restricted associated feature).

6.2.4 All ideal features belong to one of the seven invariance classes defined in Table 1.

© ISO 2011 – All rights reserved

Documents
Document Sharing Hub
Full document details: BS EN ISO 17450-1:2011

Table 1 — Invariance classes

Invariance class	Unconstrained degrees of freedom
complex	none
prismatic	1 translation along a straight line
revolute	1 rotation around a straight line
helical	1 translation along and 1 rotation combined around a straight line
cylindrical	1 translation along and 1 rotation around a straight line
planar	1 rotation around a straight line and 2 translations in a plane perpendicular to the straight line
spherical	3 rotations around a point

EXAMPLE 1 A cylinder is invariant either by translation along its axis or by rotation around its axis; it belongs to the cylindrical invariance class.

EXAMPLE 2 A cone is invariant by rotation around its axis; it belongs to the revolute invariance class.

EXAMPLE 3 A prism with elliptical section is invariant by a translation along a straight line; it belongs to the prismatic invariance class.

6.2.5 For each ideal feature, one or more situation features can be defined, depending on its invariance class (see Annex E). A situation feature is a point, straight line, plane, or helix from which the location or orientation of a feature can be defined with characteristics.

Examples of situation features are given in Table 2.

Table 2 — Examples of situation features of ideal features

Invariance class	Type	Examples of situation features
complex	elliptic curve hyperbolic paraboloid ...	ellipse plane, symmetry planes symmetry planes, tangent point ...
prismatic	prism with an elliptic basis ...	symmetry planes, axis
revolute	circle cone torus ...	the plane containing the circle, the circle centre the symmetry axis, apex the plane perpendicular to the torus axis, the torus centre ...
helical	helical line helical surface with a basis of involute to a circle ...	helix helix ...
cylindrical	straight line cylinder	the straight line [a] the symmetry axis [a]
planar	plane	the plane
spherical	point sphere	the point [a] the centre [a]

[a] No alternative situation feature can be chosen, because the result would be a different invariance class for the considered feature.

© ISO 2011 – All rights reserved
Documents
Document Sharing Hub
Full document details: BS EN ISO 17450-1:2011

6.3 Non-ideal features

Non-ideal features are fully dependent on the non-ideal surface model. They can be

— the non-ideal surface model itself (see Figure 9),

— part of the non-ideal surface model (features called “partition features”) (see Figure 17),

— the derived partition features [features not included in the non-ideal surface model but created through an operation (see Clause 8) from part of the non-ideal surface model] (see Figure 12), or

— the intersection between the non-ideal surface model and an ideal feature.

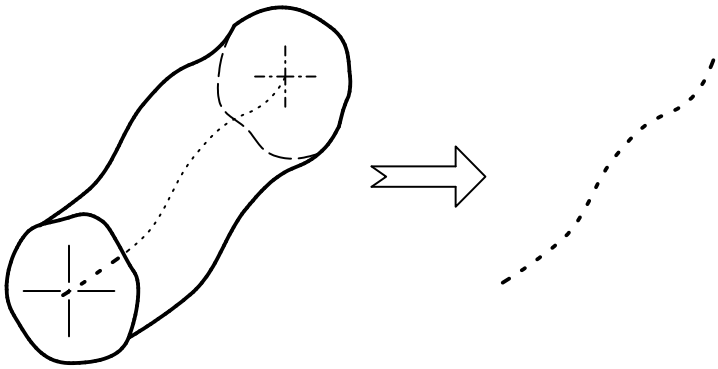

Figure 12 — Derived partition feature

Non-ideal features are bound and are composed of an infinite or finite set of points.

© ISO 2011 – All rights reserved

Documents
Document Sharing Hub
Full document details: BS EN ISO 17450-1:2011