BS EN ISO 17636-2:2022

BSI Standards Publication

Non-destructive testing of welds — Radiographic testing

Part 2: X- and gamma-ray techniques with digital detectors

Documents
Document Sharing Hub

Full document details: BS EN ISO 17636-2:2022

National foreword

This British Standard is the UK implementation of EN ISO 17636-2:2022. It is identical to ISO 17636-2:2022. It supersedes BS EN ISO 17636-2:2013, which is withdrawn.

The UK participation in its preparation was entrusted to Technical Committee WEE/46/5, Radiographic Testing.

A list of organizations represented on this committee can be obtained on request to its committee manager.

Contractual and legal considerations

This publication has been prepared in good faith, however no representation, warranty, assurance or undertaking (express or implied) is or will be made, and no responsibility or liability is or will be accepted by BSI in relation to the adequacy, accuracy, completeness or reasonableness of this publication. All and any such responsibility and liability is expressly disclaimed to the full extent permitted by the law.

This publication is provided as is, and is to be used at the recipient's own risk.

The recipient is advised to consider seeking professional guidance with respect to its use of this publication.

This publication is not intended to constitute a contract. Users are responsible for its correct application.

© The British Standards Institution 2022
Published by BSI Standards Limited 2022

ISBN 978 0 539 04733 2

ICS 19.100; 25.160.40

Compliance with a British Standard cannot confer immunity from legal obligations.

This British Standard was published under the authority of the Standards Policy and Strategy Committee on 31 October 2022.

Amendments/corrigenda issued since publication

Date	Text affected

Documents
Document Sharing Hub

Full document details: BS EN ISO 17636-2:2022

EUROPEAN STANDARD

NORME EUROPÉENNE

EUROPÄISCHE NORM

EN ISO 17636-2

October 2022

ICS 25.160.40

Supersedes EN ISO 17636-2:2013

English Version

Non-destructive testing of welds - Radiographic testing - Part 2: X- and gamma-ray techniques with digital detectors (ISO 17636-2:2022)

Essais non destructifs des assemblages soudés - Contrôle par radiographie - Partie 2: Techniques par rayons X ou gamma à l'aide de détecteurs numériques (ISO 17636-2:2022)

Zerstörungsfreie Prüfung von Schweißverbindungen - Durchstrahlungsprüfung - Teil 2: Röntgen- und Gammastrahlungstechniken mit digitalen Detektoren (ISO 17636-2:2022)

This European Standard was approved by CEN on 23 August 2022.

CEN members are bound to comply with the CEN/CENELEC Internal Regulations which stipulate the conditions for giving this European Standard the status of a national standard without any alteration. Up-to-date lists and bibliographical references concerning such national standards may be obtained on application to the CEN-CENELEC Management Centre or to any CEN member.

This European Standard exists in three official versions (English, French, German). A version in any other language made by translation under the responsibility of a CEN member into its own language and notified to the CEN-CENELEC Management Centre has the same status as the official versions.

CEN members are the national standards bodies of Austria, Belgium, Bulgaria, Croatia, Cyprus, Czech Republic, Denmark, Estonia, Finland, France, Germany, Greece, Hungary, Iceland, Ireland, Italy, Latvia, Lithuania, Luxembourg, Malta, Netherlands, Norway, Poland, Portugal, Republic of North Macedonia, Romania, Serbia, Slovakia, Slovenia, Spain, Sweden, Switzerland, Türkiye and United Kingdom.

EUROPEAN COMMITTEE FOR STANDARDIZATION
COMITÉ EUROPÉEN DE NORMALISATION
EUROPÄISCHES KOMITEE FÜR NORMUNG

CEN-CENELEC Management Centre: Rue de la Science 23, B-1040 Brussels

© 2022 CEN All rights of exploitation in any form and by any means reserved worldwide for CEN national Members.

Ref. No. EN ISO 17636-2:2022 E

Documents
Document Sharing Hub

Full document details: BS EN ISO 17636-2:2022

European foreword

This document (EN ISO 17636-2:2022) has been prepared by Technical Committee ISO/TC 44 "Welding and allied processes" in collaboration with Technical Committee CEN/TC 121 “Welding and allied processes” the secretariat of which is held by DIN.

This European Standard shall be given the status of a national standard, either by publication of an identical text or by endorsement, at the latest by April 2023, and conflicting national standards shall be withdrawn at the latest by April 2023.

Attention is drawn to the possibility that some of the elements of this document may be the subject of patent rights. CEN shall not be held responsible for identifying any or all such patent rights.

This document supersedes EN ISO 17636-2:2013.

Any feedback and questions on this document should be directed to the users’ national standards body/national committee. A complete listing of these bodies can be found on the CEN website.

According to the CEN-CENELEC Internal Regulations, the national standards organizations of the following countries are bound to implement this European Standard: Austria, Belgium, Bulgaria, Croatia, Cyprus, Czech Republic, Denmark, Estonia, Finland, France, Germany, Greece, Hungary, Iceland, Ireland, Italy, Latvia, Lithuania, Luxembourg, Malta, Netherlands, Norway, Poland, Portugal, Republic of North Macedonia, Romania, Serbia, Slovakia, Slovenia, Spain, Sweden, Switzerland, Türkiye and the United Kingdom.

Endorsement notice

The text of ISO 17636-2:2022 has been approved by CEN as EN ISO 17636-2:2022 without any modification.

Documents
Document Sharing Hub

Full document details: BS EN ISO 17636-2:2022

Contents

Page

Foreword ... **v**

1 Scope ... **1**

2 Normative references ... **1**

3 Terms and definitions ... **2**

4 Symbols and abbreviated terms ... **6**

5 Classification of radiographic techniques and compensation principles ... **8**
5.1 Classification ... 8
5.2 Compensation principles, CP I, CP II or CP III ... 8
5.2.1 General ... 8
5.2.2 Compensation principle I (CP I) ... 8
5.2.3 Compensation principle II (CP II) ... 8
5.2.4 Compensation principle III (CP III) ... 8
5.2.5 Theoretical background ... 9

6 General preparations and requirements ... **9**
6.1 Protection against ionizing radiation ... 9
6.2 Surface preparation and stage of manufacture ... 9
6.3 Location of the weld in the radiograph ... 9
6.4 Identification of radiographs ... 9
6.5 Marking ... 9
6.6 Overlap of digital images ... 10
6.7 Types and positions of image quality indicators (IQIs) ... 10
6.7.1 General ... 10
6.7.2 Duplex wire IQIs ... 10
6.7.3 Single wire or step-hole IQIs ... 10
6.8 Evaluation of image quality ... 11
6.9 Minimum image quality values ... 12
6.10 Personnel qualification ... 12

7 Recommended techniques ... **13**
7.1 Test arrangements ... 13
7.1.1 General ... 13
7.1.2 Single-wall penetration of plane objects (see Figure 1) ... 14
7.1.3 Single-wall penetration of curved objects with the source outside the object (see Figures 2 to 4) ... 14
7.1.4 Single-wall penetration of curved objects with the source inside the object for panoramic exposure (see Figures 5 to 7) ... 15
7.1.5 Single-wall penetration of curved objects with the source located off-centre and inside the object (see Figures 8 to 10) ... 16
7.1.6 Double-wall penetration and double-image evaluation (DWDI) of pipes with the elliptic technique and the source and the detector outside the object (see Figure 11) ... 17
7.1.7 Double-wall penetration and double-image evaluation (DWDI) with the perpendicular technique and source and detector outside the object (see Figure 12) ... 17
7.1.8 Double-wall penetration and single-image evaluation (DWSI) of curved objects for evaluation of the wall next to the detector (see Figures 13 to 16) ... 18
7.1.9 Penetration of objects with different material thicknesses (see Figure 17 to 19) ... 19
7.2 Choice of tube voltage and radiation source ... 20
7.2.1 X-ray devices up to 1 000 kV ... 20
7.2.2 Other radiation sources ... 21
7.3 Detector systems and metal screens ... 22
7.3.1 Minimum normalized signal-to-noise ratio (SNR_N) ... 22

© ISO 2022 – All rights reserved

AVA Documents
Document Sharing Hub
Full document details: BS EN ISO 17636-2:2022

7.3.2 Compensation principle II ... 25
7.3.3 Metal screens for IPs and shielding ... 25
7.4 Alignment of beam ... 25
7.5 Reduction of scattered radiation ... 26
7.5.1 Metal filters and collimators ... 26
7.5.2 Interception of backscattered radiation ... 26
7.6 Source-to-object distance ... 26
7.7 Geometric magnification technique ... 33
7.8 Maximum area for a single exposure ... 34
7.9 Processing ... 34
7.9.1 Scan and read-out of images ... 34
7.9.2 Correction of acquired DDA images ... 35
7.9.3 Bad pixel interpolation ... 35
7.9.4 Image processing ... 35
7.10 Monitor viewing conditions and storage of digital radiographs ... 36

8 Test report ... 36

Annex A (normative) **Number of exposures for acceptable testing of a circumferential butt weld ... 38**

Annex B (normative) **Minimum image quality values ... 43**

Annex C (normative) **Determination of basic spatial resolution ... 51**

Annex D (informative) **Determination of minimum grey values for CR practice ... 53**

Annex E (informative) **Grey values — General remarks ... 58**

Annex F (informative) **Considering the detector unsharpness for f_{min} ... 60**

Annex G (informative) **Calculation of recommended X-ray tube voltages from Figure 20 ... 63**

Bibliography ... 64

© ISO 2022 – All rights reserved

Documents
Document Sharing Hub
Full document details: BS EN ISO 17636-2:2022

Foreword

ISO (the International Organization for Standardization) is a worldwide federation of national standards bodies (ISO member bodies). The work of preparing International Standards is normally carried out through ISO technical committees. Each member body interested in a subject for which a technical committee has been established has the right to be represented on that committee. International organizations, governmental and non-governmental, in liaison with ISO, also take part in the work. ISO collaborates closely with the International Electrotechnical Commission (IEC) on all matters of electrotechnical standardization.

The procedures used to develop this document and those intended for its further maintenance are described in the ISO/IEC Directives, Part 1. In particular, the different approval criteria needed for the different types of ISO documents should be noted. This document was drafted in accordance with the editorial rules of the ISO/IEC Directives, Part 2 (see www.iso.org/directives).

Attention is drawn to the possibility that some of the elements of this document may be the subject of patent rights. ISO shall not be held responsible for identifying any or all such patent rights. Details of any patent rights identified during the development of the document will be in the Introduction and/or on the ISO list of patent declarations received (see www.iso.org/patents).

Any trade name used in this document is information given for the convenience of users and does not constitute an endorsement.

For an explanation of the voluntary nature of standards, the meaning of ISO specific terms and expressions related to conformity assessment, as well as information about ISO's adherence to the World Trade Organization (WTO) principles in the Technical Barriers to Trade (TBT), see www.iso.org/iso/foreword.html.

This document was prepared by Technical Committee ISO/TC 44, *Welding and allied processes*, Subcommittee SC 5, *Testing and inspection of welds*, in collaboration with the European Committee for Standardization (CEN) Technical Committee CEN/TC 121, *Welding and allied processes*, in accordance with the Agreement on technical cooperation between ISO and CEN (Vienna Agreement).

This second edition cancels and replaces the first edition (ISO 17636-2:2013), which has been technically revised.

The main changes are as follows:

— the normative references have been updated;

— the figures have been updated;

— manual and automated inspection with DDAs has been considered in 6.6, 6.7, and 7.8;

— references to Figures 1 to 19 have been updated throughout the document;

— in 6.7 a), the acceptance of a wire visibility shorter than 10 mm for pipes with an external diameter < 50 mm has been added;

— in 6.7.1, the use of ASTM wires and other IQIs by agreement of the contracting parties has been added;

— 6.8, “Evaluation of image quality” for digital radiography has been added;

— in 6.9 and 7.2.2, the lower thickness limit for Se-75 applications has been deleted;

— in 6.8, 6.9 and 7.3.1, a clarification for the IQI usage for DWDI technique has been added;

— permission to reduce SNR_N if the tube voltage is reduced or energy-resolving detectors are used to < 80 % of the values given in Figure 20 has been added in 7.3.1;

© ISO 2022 – All rights reserved

Documents
Document Sharing Hub
Full document details: BS EN ISO 17636-2:2022

— in 7.3.2, the compensation principle II (CP II) has been extended to three wire pairs without the agreement of the contracting parties;

— Annex C has been shortened to avoid duplication with ISO 19232-5;

— in D.2, a new note on fading has been added;

— a new Annex F has been added;

— a new Annex G has been added.

A list of all parts in the ISO 17636 series can be found on the ISO website.

Any feedback or questions on this document should be directed to the user's national standards body. A complete listing of these bodies can be found at www.iso.org/members.html. Official interpretations of ISO/TC 44 documents, where they exist, are available from this page: https://committee.iso.org/sites/tc44/home/interpretation.html.

© ISO 2022 – All rights reserved
Documents
Document Sharing Hub
Full document details: BS EN ISO 17636-2:2022

Non-destructive testing of welds — Radiographic testing —

Part 2: X- and gamma-ray techniques with digital detectors

1 Scope

This document specifies techniques of digital radiography with the object of enabling satisfactory and repeatable results. The techniques are based on generally recognized practice and fundamental theory of the subject.

This document applies to the digital radiographic testing of fusion welded joints in metallic materials. It applies to the joints of plates and pipes. Besides its conventional meaning, "pipe", as used in this document, covers other cylindrical bodies such as tubes, penstocks, boiler drums and pressure vessels.

This document specifies the requirements for digital radiographic X- and gamma-ray testing by either computed radiography (CR) or radiography with digital detector arrays (DDAs) of the welded joints of metallic plates and tubes for the detection of imperfections. It includes manual and automated inspection with DDAs.

Digital detectors provide a digital grey value image which can be viewed and evaluated using a computer (Annex E). This document specifies the recommended procedure for detector selection and radiographic practice. Selection of computer, software, monitor, printer and viewing conditions are important, but are not the main focus of this document. The procedure specified in this document provides the minimum requirements for radiographic practice which permits exposure and acquisition of digital radiographs with equivalent sensitivity for the detection of imperfections as film radiography (specified in ISO 17636-1).

This document does not specify acceptance levels for any of the indications found on the digital radiographs. ISO 10675 provides information on acceptance levels for weld inspection.

If contracting parties apply lower test criteria, it is possible that the quality achieved will be significantly lower than when this document is strictly applied.

2 Normative references

The following documents are referred to in the text in such a way that some or all of their content constitutes requirements of this document. For dated references, only the edition cited applies. For undated references, the latest edition of the referenced document (including any amendments) applies.

ISO 5576, *Non-destructive testing — Industrial X-ray and gamma-ray radiology — Vocabulary*

ISO 9712, *Non-destructive testing — Qualification and certification of NDT personnel*

ISO 16371-1:2011, *Non-destructive testing — Industrial computed radiography with storage phosphor imaging plates — Part 1: Classification of systems*

ISO 19232-1, *Non-destructive testing — Image quality of radiographs — Part 1: Determination of the image quality value using wire-type image quality indicators*

ISO 19232-2, *Non-destructive testing — Image quality of radiographs — Part 2: Determination of the image quality value using step/hole-type image quality indicators*

ISO 19232-4, *Non-destructive testing — Image quality of radiographs — Part 4: Experimental evaluation of image quality values and image quality tables*

© ISO 2022 – All rights reserved

AVA Documents Document Sharing Hub
Full document details: BS EN ISO 17636-2:2022

ISO 19232-5, *Non-destructive testing — Image quality of radiographs — Part 5: Determination of the image unsharpness and basic spatial resolution value using duplex wire-type image quality indicators*

EN 12543 (all parts), *Non-destructive testing — Characteristics of focal spots in industrial X-ray systems for use in non-destructive testing*

EN 12679, *Non-destructive testing — Radiographic testing — Determination of the size of industrial radiographic gamma sources*

ASTM E747, *Standard Practice for Design, Manufacture and Material Grouping Classification of Wire Image Quality Indicators (IQI) Used for Radiology*

JIS Z2306, *Radiographic image quality indicators for non-destructive testing*

3 Terms and definitions

For the purposes of this document, the terms and definitions given in ISO 5576 and the following apply.

ISO and IEC maintain terminology databases for use in standardization at the following addresses:

— ISO Online browsing platform: available at https://www.iso.org/obp

— IEC Electropedia: available at https://www.electropedia.org/

3.1
computed radiography
CR
complete system comprising a *storage phosphor imaging plate* (IP) (3.2) and a corresponding read-out unit (scanner or reader), which converts the information from the IP into a digital image

3.2
storage phosphor imaging plate
IP
photostimulable luminescent material capable of storing a latent radiographic image of a material being tested and which, upon stimulation by a source of red light of appropriate wavelength, generates luminescence proportional to radiation absorbed

Note 1 to entry: When performing *computed radiography* (3.1), an IP is used in lieu of a film. When establishing techniques related to *source size* (3.20) or focal geometries, the IP is referred to as a detector, i.e. *source-to-detector distance* (3.21).

3.3
digital detector array
DDA
electronic device converting ionizing or penetrating radiation into a discrete array of analogue signals which are subsequently digitized and transferred to a computer for display as a digital image corresponding to the radiologic energy pattern imparted upon the input region of the device

3.4
structure noise
<imaging plate> local sensitivity variations due to inhomogeneities in the sensitive layer (structure, graininess) and surface of an imaging plate

Note 1 to entry: After scanning of the exposed imaging plate, the inhomogeneities appear as overlaid fixed pattern noise in the digital image.

Note 2 to entry: This noise limits the maximum achievable image quality of digital CR images and can be compared with the graininess in film images.

© ISO 2022 – All rights reserved
Documents
Document Sharing Hub
Full document details: BS EN ISO 17636-2:2022

3.5
structure noise
<digital detector array> local sensitivity variations due to different properties of detector elements (pixels)

Note 1 to entry: After read-out of the exposed uncorrected *digital detector array* (DDA) (3.3) image, the inhomogeneities of the DDA appear as overlaid fixed pattern noise in the digital image. Therefore, all DDAs require, after read-out, a software-based image correction (software and guidelines are provided by the manufacturer). A suitable correction procedure reduces the structure noise.

Note 2 to entry: The image correction is also called "calibration" in other documents.

3.6
grey value
GV
numeric value of a pixel in a digital image

Note 1 to entry: This is typically interchangeable with the terms "pixel value", "detector response", "analogue-to-digital unit" and "detector signal".

Note 2 to entry: For further information, see Annex E.

3.7
linearized grey value
numeric value of a pixel which is directly proportional to the detector exposure dose, having a value of zero if the detector was not exposed

Note 1 to entry: This is typically interchangeable with the terms "linearized pixel value" and "linearized detector signal".

3.8
basic spatial resolution of a digital detector
SR_b^{detector}
half of the measured detector unsharpness in a digital image, which corresponds to the effective pixel size and indicates the smallest geometrical detail which can be resolved with a digital detector at magnification equal to one

Note 1 to entry: For this measurement, the duplex wire IQI is placed directly on the *digital detector array* (3.3) or imaging plate.

Note 2 to entry: The measurement of unsharpness is described in ISO 19232-5. See also ASTM E1000 and ASTM E2736.

3.9
basic spatial resolution of a digital image
SR_b^{image}
half of the measured image unsharpness in a digital image, which corresponds to the effective pixel size and indicates the smallest geometrical detail which can be resolved in a digital image

Note 1 to entry: For this measurement, the duplex wire IQI is placed directly on the object (source side).

Note 2 to entry: The measurement of unsharpness is described in ISO 19232-5. See also ASTM E1000 and ASTM E2736.

3.10
signal-to-noise ratio
SNR
ratio of mean value of the *linearized grey values* (3.7) to the standard deviation of the linearized grey values (noise) in a given *region of interest* (3.25) in a digital image

© ISO 2022 – All rights reserved

Documents
Document Sharing Hub
Full document details: BS EN ISO 17636-2:2022

3.11
normalized signal-to-noise ratio
SNR_N
signal-to-noise ratio (3.10) normalized by the *basic spatial resolution of a digital image*, SR_b^{image}, (3.9) and calculated from the measured signal-to-noise ratio by:

$$SNR_N = SNR \cdot \frac{88{,}6}{SR_b^{\text{image}}}$$

Note 1 to entry: If the duplex wire IQI is positioned directly on the detector without a test object, SR_b^{image} is equal to the measured SR_b^{detector}, which can be used instead of SR_b^{image}.

3.12
contrast-to-noise ratio
CNR
ratio of the difference of the mean signal levels between two image areas to the averaged standard deviation of the signal levels

Note 1 to entry: Signal levels are measured in *grey values* (3.6) or *linearized grey values* (3.7).

Note 2 to entry: The contrast-to-noise ratio describes a component of image quality and depends approximately on the product of radiographic attenuation coefficient and SNR. In addition to adequate CNR, it is also necessary for a digital radiograph to possess adequate unsharpness or basic spatial resolution to resolve desired features of interest.

3.13
normalized contrast-to-noise ratio
CNR_N
contrast-to-noise ratio (3.12) normalized by the basic spatial resolution of a digital image, SR_b^{image}, (3.9), as measured directly in the digital image with the duplex wire IQI on the object side and calculated from the measured contrast-to-noise ratio, CNR, i.e.

$$CNR_N = CNR \cdot \frac{88{,}6}{SR_b^{\text{image}}}$$

3.14
aliasing
artefacts that appear in an image when the spatial frequency of the input is higher than the output is capable of reproducing

Note 1 to entry: Aliasing often appears as jagged or stepped sections in a line or as moiré patterns.

3.15
cluster kernel pixel
CKP
bad pixel (3.29) which does not have five or more good neighbourhood pixels

Note 1 to entry: See ASTM E2597 for details of bad pixels and CKP.

3.16
nominal thickness
t
thickness of the parent material only where manufacturing tolerances do not have to be considered

3.17
penetration thickness change
Δt
change of *penetrated thickness* (3.18) relative to the *nominal thickness* (3.16) due to beam angle

© ISO 2022 – All rights reserved
Documents
Document Sharing Hub
Full document details: BS EN ISO 17636-2:2022

3.18
penetrated thickness
w
thickness of material in the direction of the radiation beam, calculated on the basis of the *nominal thicknesses* (3.16) of all penetrated walls

3.19
object-to-detector distance
b
largest (maximum) distance between the radiation side of the radiographed part of the test object and the sensitive layer of the detector, measured along the central axis of the radiation beam

Note 1 to entry: The abbreviated term ODD is used in other documents.

3.20
source size
d
size of the radiation source or focal spot size

Note 1 to entry: See EN 12543 or EN 12679.

3.21
source-to-detector distance
SDD
distance between the source of radiation and the detector, measured in the direction of the beam

Note 1 to entry: $SDD = f + b$

where

f is *source-to-object distance* (3.22);

b is *object-to-detector distance* (3.19).

3.22
source-to-object distance
f
distance between the source of radiation and the source side of the test object, measured along the central axis of the radiation beam

Note 1 to entry: The abbreviated term SOD is used in other documents.

3.23
external diameter
D_e
nominal value of the external diameter of the pipe

3.24
geometric magnification
v
ratio of *source-to-detector distance* (3.21) to *source-to-object distance* (3.22)

3.25
region of interest
RoI
defined group of pixels from which measurements or statistics, or both, can be derived

© ISO 2022 – All rights reserved

Documents
Document Sharing Hub
Full document details: BS EN ISO 17636-2:2022

3.26
weld area to evaluate
WAE
area to be evaluated on the radiograph, which contains the weld and the *heat-affected zone* (3.30) on both sides

3.27
area of interest
AoI
minimum area which should be evaluated on the radiograph and which contains the weld, the *heat-affected zone* (3.30) on both sides and all lead letters, markers and image quality indicators (IQIs)

3.28
raw image
image acquired with *digital detector arrays* (3.3) or computed radiography (3.1) systems after image correction, if a correction has been performed

3.29
bad pixel
underperforming detector element (pixel) of a *digital detector array* (3.3)

Note 1 to entry: Bad pixels are described in ASTM E2597.

3.30
heat affected zone
HAZ
area beside the weld influenced by the heating and cooling process of the welding, which is considered as the two areas beside the weld, each with the same width as the weld cap but at least 10 mm width to be considered for evaluation

4 Symbols and abbreviated terms

For the purposes of this document, the symbols and abbreviated terms given in Table 1 apply.

Table 1 — Symbols and abbreviated terms

Symbol or abbreviated term	Definition
α	angle subtended by half of the circumferential length of the AoI at the pipe centre, see Figure 22 a)
AoI	area of interest
β	opening angle of source window or collimator to central beam
b	object-to-detector distance
b'	object-to-detector distance perpendicular to test object
b_{ed}	maximum distance from the object surface nearest to the planar detector to the object surface most distant to the detector in the weld area to evaluate (WAE) of the pipe, see Figures 2 b), 8 b), 13 b), 14 b) and 22
b_{gap}	distance between the radiation sensitive layer of the detector and the outer pipe surface, see Figures 2 b) and 22
C_i	factor to correct f_{min} for using planar detectors for curved objects, if $b > t$
CKP	cluster kernel pixel
CNR	contrast-to-noise ratio
CNR_N	normalized contrast-to-noise ratio
CR	computed radiography
d	source size, focal spot size (see the EN 12543 series and EN 12679)

© ISO 2022 – All rights reserved
Documents
Document Sharing Hub
Full document details: BS EN ISO 17636-2:2022

Table 1 *(continued)*

Symbol or abbreviated term	Definition
D	detector
D_e	external diameter
DDA	digital detector array
DWDI	double-wall double-image
DWSI	double-wall single-image
f	source-to-object distance
f_{min}	minimum source-to-object distance
f^*_{min}	minimum source-to-object distance for testing of curved objects with planar detectors
f'	source-to-object distance perpendicular to test object
GV	grey value
HAZ	heat-affected zone
IP	storage phosphor imaging plate
IQI	image quality indicator
r_e	external radius
r_i	internal radius
RoI	region of interest
S	radiation source
SDD	source-to-detector distance
SNR	signal-to-noise ratio
SNR_N	normalized signal-to-noise ratio
SR_b	basic spatial resolution which can be SR_b^{image} or $SR_b^{detector}$
$SR_b^{detector}$	basic spatial resolution of a digital detector
SR_b^{image}	basic spatial resolution of a digital image
t	nominal thickness
Δt	penetration thickness change
u_G	geometric unsharpness
u_d	inherent unsharpness of the detector system, excluding any geometric unsharpness, measured from the digital image with a duplex wire IQI adjacent to the detector
U_{Im}	image unsharpness, measured in the digital image at the object plane with a duplex wire IQI
u_T	total image unsharpness, including geometric unsharpness, measured in the digital image at the detector plane with a duplex wire IQI at the object plane
v	geometric magnification
v_o	optimum magnification
w	penetrated thickness
WAE	weld area to evaluate

NOTE The source-to-detector-distance (SDD), as used in digital radiography, is equivalent to SFD (see ISO 17636-1) in film radiography.

© ISO 2022 – All rights reserved

Documents
Document Sharing Hub
Full document details: BS EN ISO 17636-2:2022

5 Classification of radiographic techniques and compensation principles

5.1 Classification

The radiographic techniques are divided into two testing classes:

— testing class A: basic techniques;

— testing class B: improved techniques.

Testing class B techniques are used when testing class A techniques are insufficiently sensitive.

Radiographic techniques providing higher sensitivity than testing class B are possible and may be agreed between the contracting parties by specification of all appropriate test parameters.

The choice of digital radiographic technique shall be agreed between the contracting parties.

The visibility of flaws using film radiography or digital radiography is equivalent when using testing class A and testing class B techniques, respectively. The visibility shall be proven by the use of IQIs according to ISO 19232-1 or ISO 19232-2 and ISO 19232-5.

If, for technical or industrial reasons, it is not possible to meet one of the conditions specified for testing class B, such as the type of radiation source or the source-to-object distance, *f*, it may be agreed by contracting parties that the condition selected can be that specified for testing class A. The loss of sensitivity shall be compensated by an increase of minimum grey value and SNR_N for CR or SNR_N for the DDA technique (recommended increase of SNR_N by a factor > 1,4). Because of the better sensitivity than that of testing class A, the test specimen may be regarded as being tested to testing class B if the correct IQI sensitivity is achieved. This does not apply if the special SDD reduction as described in 7.6 for test arrangements 7.1.4 and 7.1.5 (Figure 5 to Figure 10) are used.

5.2 Compensation principles, CP I, CP II or CP III

5.2.1 General

Three compensation principles (see 5.2.2 to 5.2.4) are applied in this document for radiography with digital detectors to achieve a sufficient contrast sensitivity.

Application of these principles requires the achievement of a minimum contrast-to-noise ratio, CNR_N, normalized to the detector basic spatial resolution per detectable material thickness difference Δw. If the required normalized contrast-to-noise ratio (CNR_N per Δw) cannot be achieved due to an insufficient value of one of the following parameters, this can be compensated by an increase in the SNR.

5.2.2 Compensation principle I (CP I)

Compensation for reduced contrast (e.g. by increased tube voltage) by increased SNR (e.g. by increased tube current or exposure time).

5.2.3 Compensation principle II (CP II)

Compensation for insufficient detector sharpness (the value of SR_b is higher than specified) by increased SNR (increase in the single IQI wire or step-hole value for each missing duplex wire pair value). SR_b is $SR_b^{detector}$ for detector selection (IQI on the detector without object) or SR_b^{image} for image quality evaluation of a production radiograph with the IQI on the source side of the object.

5.2.4 Compensation principle III (CP III)

Compensation for increased local interpolation unsharpness, due to bad pixel correction for DDAs, by increased SNR.

© ISO 2022 – All rights reserved
Documents
Document Sharing Hub
Full document details: BS EN ISO 17636-2:2022

5.2.5 Theoretical background

These compensation principles are based on the approximation given in Formula (1) for small flaw sizes ($\Delta w << w$):

$$\frac{CNR_N}{\Delta w} = \mathrm{c} \cdot \frac{\mu_{\mathrm{eff}} \cdot SNR}{SR_b^{\mathrm{image}}} \tag{1}$$

where

c is a constant (0,088 6 mm);

μ_{eff} is the effective attenuation coefficient, which is equivalent to the specific material contrast, in mm^{-1};

CNR_N is the normalized CNR, as measured in the digital image;

SR_b^{image} is the basic spatial image resolution, in mm.

6 General preparations and requirements

6.1 Protection against ionizing radiation

WARNING — Exposure of any part of the human body to X-rays or gamma rays can be highly injurious to health. Wherever X-ray equipment or radioactive sources are in use, appropriate health and safety requirements shall be applied.

NOTE Local, national and international regulations and safety precautions provide additional information.

6.2 Surface preparation and stage of manufacture

In general, surface preparation is not necessary, but where surface imperfections or coatings can cause difficulty in detecting defects, the surface shall be ground smooth or the coatings shall be removed.

Unless otherwise specified, digital radiography shall be carried out after the final stage of manufacture, e.g. after grinding or heat treatment.

6.3 Location of the weld in the radiograph

Where the digital radiograph does not show the weld, high-density markers shall be placed on both sides of the weld outside the weld area to evaluate (WAE).

6.4 Identification of radiographs

Symbols shall be affixed to each section of the object being digitally radiographed. The images of these symbols shall appear in the digital radiograph outside the WAE where possible and shall ensure unambiguous identification of the section. Another identification system may be part of the contract agreement.

6.5 Marking

Permanent markings on the object to be tested shall be made in order to accurately locate the position of each digital radiograph, e.g. zero-point, direction, identification, measure.

Where the nature of the material and/or its service conditions do not permit permanent marking, the location may be recorded by means of accurate sketches or photographs or from automated positioning systems.

© ISO 2022 – All rights reserved

Documents
Document Sharing Hub
Full document details: BS EN ISO 17636-2:2022

6.6 Overlap of digital images

When digitally radiographing an area with two or more separate detectors (imaging plates), they shall overlap sufficiently to ensure that the complete WAE is digitally radiographed. This shall be verified by a high-density marker on the surface of the object which is to appear on each digital image. If the radiographs are taken sequentially with CR or DDA, the high-density marker shall be visible on each of the radiographs.

This applies also for DDA in manual testing and automated testing in start/stop mode. It does not apply for automated testing in continuous mode. In the latter case, the use and number of high-density markers should be subject to an agreement between the contracting parties.

6.7 Types and positions of image quality indicators (IQIs)

6.7.1 General

The quality of radiographs shall be verified by use of image quality indicators (IQIs) in accordance with ISO 19232-5 and ISO 19232-1 or ISO 19232-2. IQIs according to ASTM E747 or JIS Z2306 may be used instead, if their material group fits better to the test object or component. Tables for the conversion of wire numbers of ASTM E 747, JIS Z2306 and ISO 19232-1 can be found in these documents. By agreement between contracting parties, other IQIs with the same radiographic attenuation as the test object and the same dimensions as defined in ISO 19232-1 or ISO 19232-2 may be used.

6.7.2 Duplex wire IQIs

Following the procedure outlined in Annex C, a reference image is required for the verification of the basic spatial resolution of the digital detector system (SR_b^{detector}). In this case, the duplex wire IQI (ISO 19232-5) shall be positioned directly on the digital detector. The basic spatial resolution or duplex wire value shall be determined to verify that the system hardware meets the requirements specified as a function of the penetrated material thickness in Tables B.13 and B.14. For double-wall double-image inspection, the SR_b^{detector} shall correspond to the values of Tables B.13 and B.14 chosen on the basis that the penetrated thickness is twice the nominal single-wall thickness.

The use of a duplex wire IQI (ISO 19232-5) on the object for production radiographs is required if the geometric magnification technique (see 7.7) is applied with $v > 1{,}2$. The value of the basic spatial resolution, measured in the digital image (see Annex C), shall not exceed the maximum SR_b^{image} values specified as a function of the penetrated material thickness in Table B.13 or Table B.14. Automated DDA inspection systems may use a detection mode as continuous movement (e.g. translation or rotation) or start/stop acquisition. The image unsharpness of moving or start/stop systems shall not exceed the values of Table B.13 or Table B.14.

For single-image inspection, the single-wall thickness is taken as the penetrated material thickness. For double-wall double-image inspection in accordance with 7.1.6 and 7.1.7 (Figure 11 or Figure 12), with the duplex wire on the source side of the pipe, the pipe diameter is taken as the value b for determination of $f_{\min}$ and for determination of the required basic spatial resolution (SR_b^{image}) from Table B.13 and Table B.14. The basic spatial resolution of the detector (SR_b^{detector}) for double-wall double-image inspection shall correspond to the values of Table B.13 and Table B.14, chosen on the basis of twice the nominal single-wall thickness as the penetrated material thickness.

The duplex wire IQI shall be positioned tilted by a few degrees (2° to 5°) to the digital rows or columns of the digital image.

In historical cases, where the IQI was positioned at 45° to the digital rows or columns, the obtained IQI number shall be reduced by one.

6.7.3 Single wire or step-hole IQIs

The contrast sensitivity of digital images shall be verified by use of IQIs, in accordance with the specific application as given in Tables B.1 to B.12 (see also ISO 19232-1 or ISO 19232-2).

© ISO 2022 – All rights reserved
Documents
Document Sharing Hub
Full document details: BS EN ISO 17636-2:2022

The single wire or step-hole IQIs used shall be placed on the source side of the test object at the centre of the area of interest (AoI) on the parent metal beside the weld. The identification symbols and, when used, the lead letter F shall not be in the WAE, except when geometric configuration makes it impractical. The IQI shall be in close contact with the surface of the object. Its location shall be in a section of uniform thickness characterized by a uniform grey value (mean) in the digital image.

According to the IQI type used, cases a) and b) shall be considered.

a) When using a single wire IQI, the wires shall be directed perpendicular to the weld and its location shall ensure that at least 10 mm of the wire length shows in a section of uniform grey value or SNR_N, which is normally in the parent metal adjacent to the weld. For exposures in accordance with 7.1.6 and 7.1.7 (Figure 11 and Figure 12), the IQI should be placed with the wires across the pipe axis and they should not be projected into the image of the weld. The visible wire length may be shorter than 10 mm for external pipe diameters smaller than 50 mm. In that case, the visible wire length shall be ≥ 20 % of the external pipe diameter.

b) When using a step-hole IQI, it shall be placed in such a way that the required hole is placed close to the weld.

For single-wall exposures in accordance with 7.1.4 and 7.1.5 (Figures 5 to 10), the IQI type used may be placed either on the source side (use Tables B.1 to B.4) or on the detector side. If the IQIs cannot be placed on the source side, they are placed on the detector side and the image quality shall be determined at least once from comparison exposure with one IQI placed on the source side and one on the detector side under the same conditions. If filters are used in front of the detector, the IQI shall be placed in front of the filter.

For double-wall exposures in accordance with 7.1.6 and 7.1.7 (Figures 11 and 12), the IQI type used shall be placed on the source side (use Tables B.5 to B.8). By agreement between contracting parties, the IQI may be placed on the detector side (use Tables B.9 to B.12).

For double-wall exposures in accordance with 7.1.8 (Figures 13 to 16), the IQI type used may be placed on the detector side. When the IQI is placed on the detector side, refer to Tables B.9 to B.12.

Where the IQIs are placed on the detector side, the letter F shall be placed near the IQI and shall be visible in the radiographic image and this shall be stated in the test report.

The identification numbers and, when used, the lead letter F shall not be in the WAE, except when geometric configuration makes it impractical.

If steps have been taken to guarantee that digital radiographs of similar test objects and regions are produced with identical exposure and processing techniques, and no differences in the image quality value are likely, the image quality does not need to be verified for every digital radiograph. The extent of image quality verification should be subject to agreement between the contracting parties.

For exposures of pipes with the source centrally located, at least three IQIs should be placed equally spaced at the circumference. The digital radiograph(s) showing IQI images are then considered representative for the whole circumference.

6.8 Evaluation of image quality

The digital images shall be evaluated on a monitor. The monitor and the viewing conditions shall fulfil the requirements of 7.10.

From the testing of the radiographic image of the wire or step-hole IQI, the number of the smallest wire or hole which can be discerned shall be determined. The image of a wire is accepted if a continuous length of at least 10 mm is clearly visible in a section of uniform grey values, typically in the HAZ near the weld [see 6.7.3 a) for pipes with smaller diameters]. In the case of the step-hole-type IQI, if there are two holes of the same diameter, both shall be discernible, in order that the step be considered as visible. See also 6.7.3 a), for the exception of DWDI evaluation of small pipes.

© ISO 2022 – All rights reserved

Documents
Document Sharing Hub
Full document details: BS EN ISO 17636-2:2022

The duplex wire IQI shall be evaluated with the profile function of the image processing system in the linear or linearized grey value image, as stated in Annex C and ISO 19232-5.

The image quality shall be determined in the unprocessed image, which is also called the raw image. The unprocessed (raw) image is considered to be the acquired image after image correction (calibration) by offset and gain images and/or firmware corrections. If the images are evaluated after application of digital filters, the wire or step-hole IQIs shall be evaluated and the achieved values shall fulfil the requirements of the relevant tables in Annex B.

The IQI values obtained shall be indicated in the test report of the radiographic testing. In each case, the type of indicator used shall be clearly stated, as shown on the IQI.

6.9 Minimum image quality values

Tables B.1 to B.14 show the minimum IQI values for metallic materials. For other materials, these requirements or corresponding requirements may be agreed upon by contracting parties and shall be noted in the report. The requirements shall be determined in accordance with ISO 19232-4.

In the case where Ir 192 or Se 75 sources are used for copper-based alloys, steel or nickel-based alloys, IQI values poorer than the ones listed in Tables B.1 to B.12 may be accepted exceptionally as follows. This shall be noted in the report.

For DWDI techniques, values shown in Tables B.5 to B.12, both testing class A and testing class B ($w = 2t$):

— 10 mm < w ≤ 25 mm: one wire value fewer or one step-hole value more for Ir 192;

— w ≤ 12 mm: one wire value fewer or one step-hole value more for Se 75.

For single-wall single-image and double-wall ($w = 2t$) single-image techniques, values shown in Tables B.1, B.2, B.9 and B.10, testing class A:

— 10 mm < w ≤ 24 mm: two wire values fewer or two step-hole values more for Ir 192;

— 24 mm < w ≤ 30 mm: one wire value fewer or one step-hole value more for Ir 192;

— w ≤ 24 mm: one wire value fewer or one step-hole value more for Se 75.

For single-wall single-image and double-wall single-image techniques, values shown in Tables B.3, B.4, B.11 and B.12, testing class B:

— 10 mm < w ≤ 40 mm: one wire value fewer or one step-hole value more for Ir 192;

— w ≤ 20 mm: one wire value fewer or one step-hole value more for Se 75.

For Se 75 and penetrated thicknesses with less than 12 mm, it can be difficult to achieve the IQI values required for testing class B. The loss of sensitivity shall be compensated by an increase of minimum grey value and SNR_N for CR or SNR_N for the DDA technique. The increase in SNR_N shall be > 1,4.

If the IQI values for Se 75 and penetrated thicknesses less than 12 mm cannot be achieved as described, the required IQI values and test conditions shall be agreed by the contracting parties based on ISO 19232-4.

6.10 Personnel qualification

Personnel performing non-destructive testing in accordance with this document shall be certified in radiographic testing in accordance with ISO 9712 or an equivalent internationally or nationally accepted certification scheme to an appropriate level in the relevant industrial sector. The personnel shall be able to prove they have undergone additional training in digital industrial radiology (see Syllabuses in ISO/TS 25107:2019, Clause 5).

© ISO 2022 – All rights reserved
Documents
Document Sharing Hub
Full document details: BS EN ISO 17636-2:2022

7 Recommended techniques

7.1 Test arrangements

7.1.1 General

Radiographic techniques in accordance with 7.1.2 to 7.1.9 (Figures 1 to 19) shall be used, if possible.

The elliptical technique (double-wall and double-image) in accordance with 7.1.6 (Figure 11) should only be used for external diameter $D_e \leq 100$ mm and wall thickness $t \leq 8$ mm and weld width $\leq D_e/4$. Two 90° displaced images are sufficient if $t/D_e < 0{,}12$; otherwise, three elliptical images are needed. The distance between the two projected weld images shall be about one weld width. Due to the higher dynamic range of digital detectors than in film radiography, D_e and t may exceed the values given by 10 %.

When it is not possible to carry out an elliptical testing for $D_e \leq 100$ mm, the perpendicular technique in accordance with 7.1.7 (Figure 12) may be used. In this case, three exposures 120° or 60° apart are required, depending on the access around the pipe.

For test arrangements in accordance with 7.1.8 (Figures 13 and 14), the inclination of the beam shall be kept as small as possible and be such as to prevent superimposition of the two images. The source-to-object distance, f', shall be kept as small as possible for the technique shown in Figures 13 and 14, in accordance with 7.6. The IQI shall be placed on the detector side close to the detector with a lead letter F.

Digital radiographic techniques other than those in 7.1.2 to 7.1.9 (Figures 1 to 19) may be agreed by the contracting parties when it is useful, for reasons such as the geometry of the piece or differences in material thickness. In 7.1.9 (Figures 17 to 19), an example of such a case is presented. Additionally, thickness compensation with the same material may be applied.

In Annex A, the minimum number of digital radiographs required is given in order to obtain an acceptable radiographic coverage of the total circumference of a butt weld in pipe.

If the geometric magnification technique is not used, the detector shall be placed as close as possible to the object.

If flexible detectors are not applicable and rigid cassettes or planar DDAs are used, as shown in Figures 2 b), 8 b), 13 b) and 14 b), the SDD shall be calculated from the wall thickness, t, the largest distance of the detector to the source side surface of the object, b, and the focal spot size or source size, d, as specified in 7.6, Formulae (2) to (13).

NOTE Unless otherwise noted, definitions of the symbols used in Figures 1 to 24 and in the annexes can be found in Clause 4.

© ISO 2022 – All rights reserved

Documents
Document Sharing Hub
Full document details: BS EN ISO 17636-2:2022

7.1.2 Single-wall penetration of plane objects (see Figure 1)

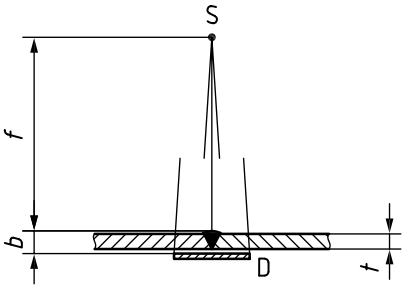

NOTE If the distance, *b*, in Figure 1 is less than 1,2 *t*, then the nominal thickness, *t*, can be used for *b* and *f* can be considered as the distance from the source to the parent material surface.

Figure 1 — Arrangement for testing of planar welds with radiation source on one side and the detector on the opposite side

7.1.3 Single-wall penetration of curved objects with the source outside the object (see Figures 2 to 4)

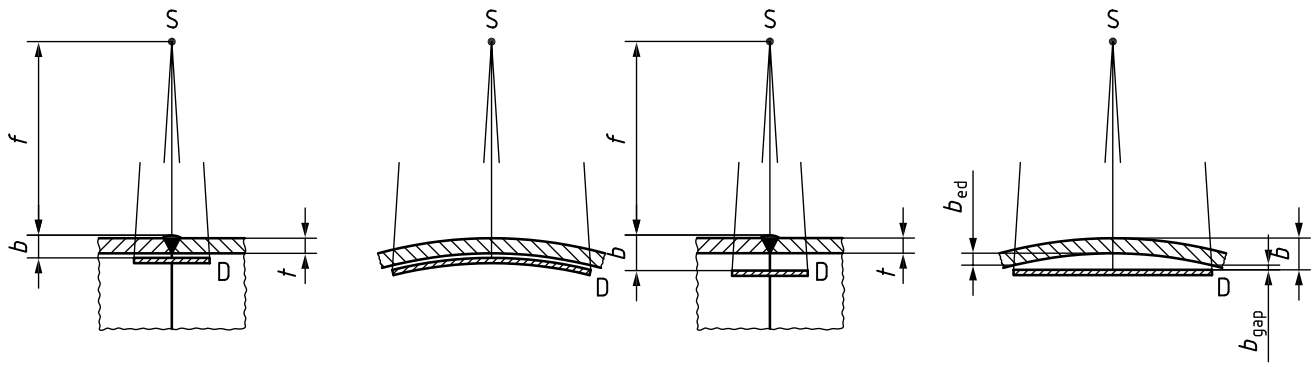

a) With curved detectors **b) With planar detectors**

NOTE If the distance, *b*, in Figure 2 is less than 1,2 *t*, then the nominal thickness, *t*, can be used for *b* and *f* can be considered as the distance from the source to the parent material surface.

Figure 2 — Arrangement for testing of curved objects with the radiation source outside and the detector inside

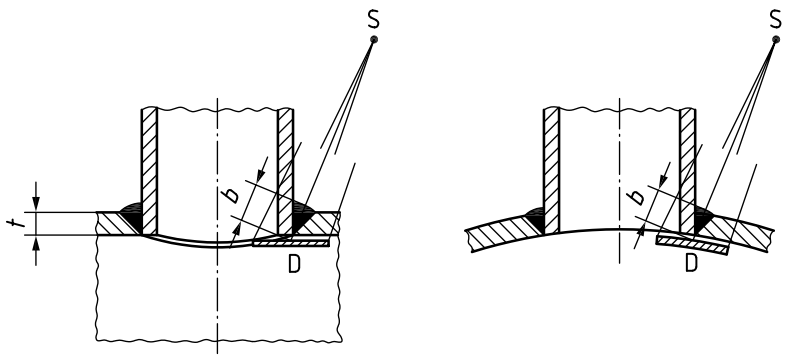

Figure 3 — Arrangement for testing of set-in welds with the radiation source outside and the detector inside

© ISO 2022 – All rights reserved
Documents
Document Sharing Hub
Full document details: BS EN ISO 17636-2:2022

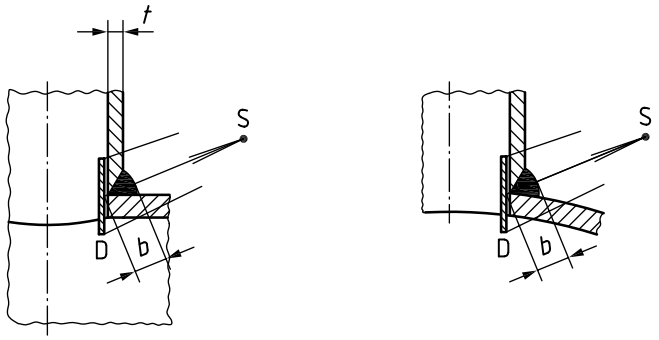

Figure 4 — Arrangement for testing of set-on welds with the radiation source outside and the detector inside

7.1.4 Single-wall penetration of curved objects with the source inside the object for panoramic exposure (see Figures 5 to 7)

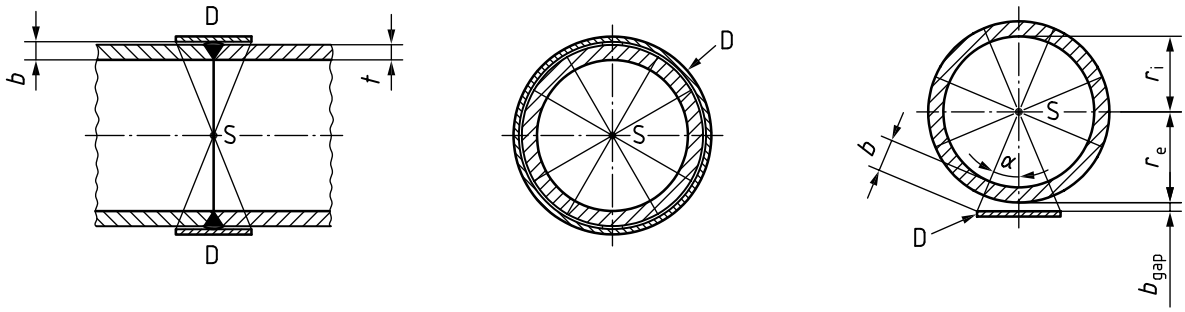

a) With curved detectors **b) With planar detectors**

Figure 5 — Arrangement for testing of welds with centrally located radiation source (central projection) and the detector outside

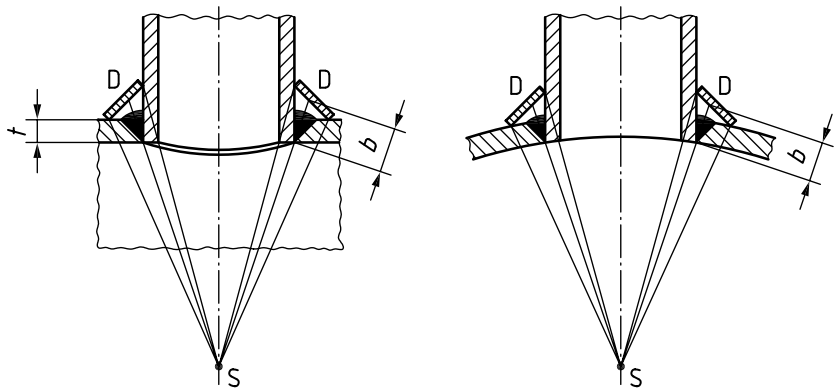

Figure 6 — Arrangement for testing of set-in welds with a radiation source, located on the central pipe axis and perpendicular to the weld centre, and the detector outside

© ISO 2022 – All rights reserved

Documents
Document Sharing Hub
Full document details: BS EN ISO 17636-2:2022