BS EN ISO 18125:2017

BSI Standards Publication

Solid biofuels — Determination of calorific value

Documents
Document Sharing Hub

Full document details: BS EN ISO 18125:2017

National foreword

This British Standard is the UK implementation of EN ISO 18125:2017. It is identical to ISO 18125:2017. It supersedes BS EN 14918:2009, which is withdrawn.

The UK participation in its preparation was entrusted to Technical Committee PTI/17, Solid biofuels.

A list of organizations represented on this committee can be obtained on request to its secretary.

This publication does not purport to include all the necessary provisions of a contract. Users are responsible for its correct application.

© The British Standards Institution 2017
Published by BSI Standards Limited 2017

ISBN 978 0 580 89326 1

ICS 27.190; 75.160.40

Compliance with a British Standard cannot confer immunity from legal obligations.

This British Standard was published under the authority of the Standards Policy and Strategy Committee on 31 August 2017.

Amendments/corrigenda issued since publication

Date	Text affected

Documents
Document Sharing Hub

Full document details: BS EN ISO 18125:2017

EUROPEAN STANDARD

NORME EUROPÉENNE

EUROPÄISCHE NORM

EN ISO 18125

May 2017

ICS 75.160.40; 27.190

Supersedes EN 14918:2009

English Version

Solid biofuels - Determination of calorific value (ISO 18125:2017)

Biocombustibles solides - Détermination du pouvoir calorifique (ISO 18125:2017)

Biogene Festbrennstoffe - Bestimmung des Heizwertes (ISO 18125:2017)

This European Standard was approved by CEN on 6 April 2017.

CEN members are bound to comply with the CEN/CENELEC Internal Regulations which stipulate the conditions for giving this European Standard the status of a national standard without any alteration. Up-to-date lists and bibliographical references concerning such national standards may be obtained on application to the CEN-CENELEC Management Centre or to any CEN member.

This European Standard exists in three official versions (English, French, German). A version in any other language made by translation under the responsibility of a CEN member into its own language and notified to the CEN-CENELEC Management Centre has the same status as the official versions.

CEN members are the national standards bodies of Austria, Belgium, Bulgaria, Croatia, Cyprus, Czech Republic, Denmark, Estonia, Finland, Former Yugoslav Republic of Macedonia, France, Germany, Greece, Hungary, Iceland, Ireland, Italy, Latvia, Lithuania, Luxembourg, Malta, Netherlands, Norway, Poland, Portugal, Romania, Serbia, Slovakia, Slovenia, Spain, Sweden, Switzerland, Turkey and United Kingdom.

EUROPEAN COMMITTEE FOR STANDARDIZATION
COMITÉ EUROPÉEN DE NORMALISATION
EUROPÄISCHES KOMITEE FÜR NORMUNG

CEN-CENELEC Management Centre: Avenue Marnix 17, B-1000 Brussels

© 2017 CEN All rights of exploitation in any form and by any means reserved worldwide for CEN national Members.

Ref. No. EN ISO 18125:2017 E

Documents
Document Sharing Hub

Full document details: BS EN ISO 18125:2017

European foreword

This document (EN ISO 18125:2017) has been prepared by Technical Committee ISO/TC 238 "Solid biofuels" in collaboration with Technical Committee CEN/TC 335 “Solid biofuels” the secretariat of which is held by SIS.

This European Standard shall be given the status of a national standard, either by publication of an identical text or by endorsement, at the latest by November 2017, and conflicting national standards shall be withdrawn at the latest by November 2017.

Attention is drawn to the possibility that some of the elements of this document may be the subject of patent rights. CEN [and/or CENELEC] shall not be held responsible for identifying any or all such patent rights.

This document supersedes EN 14918:2009.

According to the CEN-CENELEC Internal Regulations, the national standards organizations of the following countries are bound to implement this European Standard: Austria, Belgium, Bulgaria, Croatia, Cyprus, Czech Republic, Denmark, Estonia, Finland, Former Yugoslav Republic of Macedonia, France, Germany, Greece, Hungary, Iceland, Ireland, Italy, Latvia, Lithuania, Luxembourg, Malta, Netherlands, Norway, Poland, Portugal, Romania, Serbia, Slovakia, Slovenia, Spain, Sweden, Switzerland, Turkey and the United Kingdom.

Endorsement notice

The text of ISO 18125:2017 has been approved by CEN as EN ISO 18125:2017 without any modification.

Documents
Document Sharing Hub
Full document details: BS EN ISO 18125:2017

Contents

Page

Foreword ... **v**

1 Scope ... **1**

2 Normative references ... **1**

3 Terms and definitions ... **1**

4 Principle ... **2**
4.1 Gross calorific value ... 2
4.2 Net calorific value ... 3

5 Reagents ... **3**

6 Apparatus ... **4**

7 Preparation of test sample ... **7**

8 Calorimetric procedure ... **8**
8.1 General ... 8
8.2 Preparing the bomb for measurement ... 10
8.2.1 General procedure ... 10
8.2.2 Using combustion aid ... 10
8.3 Assembling the calorimeter ... 11
8.4 Combustion reaction and temperature measurements ... 11
8.5 Analysis of products of combustion ... 12
8.6 Corrected temperature rise θ ... 12
8.6.1 Observed temperature rise ... 12
8.6.2 Isoperibol and static-jacket calorimeters ... 12
8.6.3 Adiabatic calorimeters ... 14
8.6.4 Thermometer corrections ... 14
8.7 Reference temperature ... 14

9 Calibration ... **14**
9.1 Principle ... 14
9.2 Calibrant ... 15
9.2.1 Certification conditions ... 15
9.2.2 Calibration conditions ... 15
9.3 Valid working range of the effective heat capacity ε ... 15
9.4 Ancillary contributions ... 16
9.5 Calibration procedure ... 16
9.6 Calculation of effective heat capacity for the individual experiment ... 17
9.6.1 Constant mass-of-calorimeter-water basis ... 17
9.6.2 Constant total-calorimeter-mass basis ... 17
9.7 Precision of the mean value of the effective heat capacity ε ... 18
9.7.1 Constant value of ε ... 18
9.7.2 ε as a function of the observed temperature rise ... 19
9.8 Redetermination of the effective heat capacity ... 19

10 Gross calorific value ... **19**
10.1 General ... 19
10.2 Combustion ... 20
10.3 Calculation of gross calorific value ... 20
10.3.1 General ... 20
10.3.2 Constant mass-of-calorimeter-water basis ... 20
10.3.3 Constant total-calorimeter-mass basis ... 22
10.3.4 ε as a function of the observed temperature rise ... 23
10.4 Expression of results ... 23
10.5 Calculation to other bases ... 23

11 Performance characteristics ... **24**

AVA Documents
Document Sharing Hub

© ISO 2017 – All rights reserved

Full document details: BS EN ISO 18125:2017

11.1 Repeatability limit ... 24
11.2 Reproducibility limit ... 24

12 Calculation of net calorific value at constant pressure ... 24
12.1 General ... 24
12.2 Calculations ... 24

13 Test report ... 25

Annex A (normative) **Adiabatic bomb calorimeters ... 26**

Annex B (normative) **Isoperibol and static-jacket bomb calorimeters ... 30**

Annex C (normative) **Automated bomb calorimeters ... 36**

Annex D (informative) **Checklists for the design and procedures of combustion experiments ... 39**

Annex E (informative) **Examples to illustrate the main calculations used in this document when an automated bomb calorimeter is used for determinations ... 44**

Annex F (informative) **List of symbols used in this document ... 48**

Annex G (informative) **Default values of most used solid biofuels for the calculations of calorific values ... 51**

Annex H (informative) **Flow chart for a routine calorific value determination ... 52**

Bibliography ... 53

Index ... 54

© ISO 2017 – All rights reserved

Documents
Document Sharing Hub
Full document details: BS EN ISO 18125:2017

Foreword

ISO (the International Organization for Standardization) is a worldwide federation of national standards bodies (ISO member bodies). The work of preparing International Standards is normally carried out through ISO technical committees. Each member body interested in a subject for which a technical committee has been established has the right to be represented on that committee. International organizations, governmental and non-governmental, in liaison with ISO, also take part in the work. ISO collaborates closely with the International Electrotechnical Commission (IEC) on all matters of electrotechnical standardization.

The procedures used to develop this document and those intended for its further maintenance are described in the ISO/IEC Directives, Part 1. In particular the different approval criteria needed for the different types of ISO documents should be noted. This document was drafted in accordance with the editorial rules of the ISO/IEC Directives, Part 2 (see www.iso.org/directives).

Attention is drawn to the possibility that some of the elements of this document may be the subject of patent rights. ISO shall not be held responsible for identifying any or all such patent rights. Details of any patent rights identified during the development of the document will be in the Introduction and/or on the ISO list of patent declarations received (see www.iso.org/patents).

Any trade name used in this document is information given for the convenience of users and does not constitute an endorsement.

For an explanation on the voluntary nature of standards, the meaning of ISO specific terms and expressions related to conformity assessment, as well as information about ISO's adherence to the World Trade Organization (WTO) principles in the Technical Barriers to Trade (TBT) see the following URL: www.iso.org/iso/foreword.html.

This document was prepared by Technical Committee ISO/TC 238, *Solid biofuels*.

© ISO 2017 – All rights reserved

Documents
Document Sharing Hub
Full document details: BS EN ISO 18125:2017

Documents
Document Sharing Hub

Full document details: BS EN ISO 18125:2017

Solid biofuels — Determination of calorific value

1 Scope

This document specifies a method for the determination of the gross calorific value of a solid biofuel at constant volume and at the reference temperature 25 °C in a bomb calorimeter calibrated by combustion of certified benzoic acid.

The result obtained is the gross calorific value of the analysis sample at constant volume with all the water of the combustion products as liquid water. In practice, biofuels are burned at constant (atmospheric) pressure and the water is either not condensed (removed as vapour with the flue gases) or condensed. Under both conditions, the operative heat of combustion to be used is the net calorific value of the fuel at constant pressure. The net calorific value at constant volume may also be used; formulae are given for calculating both values.

General principles and procedures for the calibrations and the biofuel experiments are presented in the main text, whereas those pertaining to the use of a particular type of calorimetric instrument are described in Annexes A to C. Annex D contains checklists for performing calibration and fuel experiments using specified types of calorimeters. Annex E gives examples to illustrate some of the calculations.

2 Normative references

The following documents are referred to in the text in such a way that some or all of their content constitutes requirements of this document. For dated references, only the edition cited applies. For undated references, the latest edition of the referenced document (including any amendments) applies.

ISO 651, *Solid-stem calorimeter thermometers*

ISO 652, *Enclosed-scale calorimeter thermometers*

ISO 1770, *Solid-stem general purpose thermometers*

ISO 1771, *Enclosed-scale general purpose thermometers*

ISO 14780, *Solid biofuels — Sample preparation*

ISO 16559, *Solid biofuels — Terminology, definitions and descriptions*

ISO 18134-3, *Solid biofuels — Determination of moisture content — Oven dry method — Part 3: Moisture in general analysis sample*

ISO 18135, *Solid biofuels — Sampling*

3 Terms and definitions

For the purposes of this document, the terms and definitions given in ISO 16559 and the following apply.

ISO and IEC maintain terminological databases for use in standardization at the following addresses:

— IEC Electropedia: available at http://www.electropedia.org/

— ISO Online browsing platform: available at http://www.iso.org/obp

© ISO 2017 – All rights reserved

Documents
Document Sharing Hub
Full document details: BS EN ISO 18125:2017

3.1
gross calorific value at constant volume
absolute value of the specific energy of combustion, in joules, for unit mass of a solid biofuel burned in oxygen in a calorimetric bomb under the conditions specified

Note 1 to entry: The products of combustion are assumed to consist of gaseous oxygen, nitrogen, carbon dioxide and sulphur dioxide, of liquid water (in equilibrium with its vapour) saturated with carbon dioxide under the conditions of the bomb reaction, and of solid ash, all at the *reference temperature* (3.4).

3.2
net calorific value at constant volume
absolute value of the specific energy of combustion, in joules, for unit mass of the biofuel burned in oxygen under conditions of constant volume and such that all the water of the reaction products remains as water vapour (in a hypothetical state at 0,1 MPa), the other products being as for the gross calorific value, all at the *reference temperature* (3.4)

3.3
net calorific value at constant pressure
absolute value of the specific heat (enthalpy) of combustion, in joules, for unit mass of the biofuel burned in oxygen at constant pressure under such conditions that all the water of the reaction products remains as water vapour (at 0,1 MPa), the other products being as for the gross calorific value, all at the *reference temperature* (3.4)

3.4
reference temperature
international reference temperature for thermochemistry of 25 °C is adopted as the reference temperature for calorific values

Note 1 to entry: See 8.7.

Note 2 to entry: The temperature dependence of the calorific value of biofuels is small [less than 1 J/(g × K)].

3.5
effective heat capacity of the calorimeter
amount of energy required to cause unit change in temperature of the calorimeter

3.6
corrected temperature rise
change in calorimeter temperature caused solely by the processes taking place within the combustion bomb

Note 1 to entry: The corrected temperature rise is the total observed temperature rise corrected for heat exchange, stirring power, etc. (8.6).

Note 2 to entry: The change in temperature may be expressed in terms of other units: resistance of a platinum or thermistor thermometer, frequency of a quartz crystal resonator, etc., provided that a functional relationship is established between this quantity and a change in temperature. The *effective heat capacity of the calorimeter* (3.5) may be expressed in units of energy per such an arbitrary unit. Criteria for the required linearity and closeness in conditions between calibrations and fuel experiments are given in 9.3.

Note 3 to entry: A list of the symbols used and their definitions is given in Annex F.

4 Principle

4.1 Gross calorific value

A weighed portion of the analysis sample of the solid biofuel is burned in high-pressure oxygen in a bomb calorimeter under specified conditions. The effective heat capacity of the calorimeter is determined in calibration experiments by combustion of certified benzoic acid under similar conditions, accounted for in the certificate. The corrected temperature rise is established from observations of temperature

© ISO 2017 – All rights reserved
Documents
Document Sharing Hub
Full document details: BS EN ISO 18125:2017

before, during and after the combustion reaction takes place. The duration and frequency of the temperature observations depend on the type of calorimeter used. Water is added to the bomb initially to give a saturated vapour phase prior to combustion (see 8.2.1 and 9.2.2), thereby allowing all the water formed, from the hydrogen and moisture in the sample, to be regarded as liquid water.

The gross calorific value is calculated from the corrected temperature rise and the effective heat capacity of the calorimeter, with allowances made for contributions from ignition energy, combustion of the fuse(s) and for thermal effects from side reactions such as the formation of nitric acid. Furthermore, a correction is applied to account for the difference in energy between the aqueous sulphuric acid formed in the bomb reaction and gaseous sulphur dioxide, i.e. the required reaction product of sulphur in the biofuel. The corresponding energy effect between aqueous and gaseous hydrochloric acid can be neglected due to the usually low value for the correction regarding solid biofuels.

4.2 Net calorific value

The net calorific value at constant volume and the net calorific value at constant pressure of the biofuel are obtained by calculation from the gross calorific value at constant volume determined on the analysis sample. The calculation of the net calorific value at constant volume requires information about the moisture and hydrogen contents of the analysis sample. In principle, the calculation of the net calorific value at constant pressure also requires information about the oxygen and nitrogen contents of the analysis sample.

5 Reagents

5.1 Oxygen, at a pressure high enough to fill the bomb to 3 MPa, pure with an assay of at least a volume fraction of 99,5 %, and free from combustible matter.

Oxygen made by the electrolytic process may contain up to a volume fraction of 4 % of hydrogen.

5.2 Fuse.

5.2.1 Ignition wire, of nickel-chromium 0,16 mm to 0,20 mm in diameter, platinum 0,05 mm to 0,10 mm in diameter, or another suitable conducting wire with well-characterized thermal behaviour during combustion.

5.2.2 Cotton fuse, of white cellulose cotton, or equivalent, if required (see 8.2.1).

5.3 Combustion aids of known gross calorific value, composition and purity, like benzoic acid, n-dodecane, paraffin oil, combustion bags or capsules may be used.

5.4 Standard volumetric solutions and indicators, only for use when analysis of final bomb solutions is required.

5.4.1 Barium hydroxide solution, $c[Ba(OH)_2]$ = 0,05 mol/l.

5.4.2 Sodium carbonate solution, $c(Na_2C0_3)$ = 0,05 mol/l.

5.4.3 Sodium hydroxide solution, $c(NaOH)$ = 0,1 mol/l.

5.4.4 Hydrochloric acid solution, $c(HCl)$ = 0,1 mol/l.

5.4.5 Screened methyl orange indicator, 1 g/l solution.

Dissolve 0,25 g of methyl orange and 0,15 g of xylene cyanol FF in 50 ml of a volume fraction of 95 % ethanol and dilute to 250 ml with water.

© ISO 2017 – All rights reserved

Documents
Document Sharing Hub
Full document details: BS EN ISO 18125:2017

5.4.6 Phenolphthalein, 10 g/l solution.

Dissolve 2,5 g of phenolphthalein in 250 ml of a volume fraction of 95 % ethanol.

5.5 Benzoic acid, of calorimetric-standard quality, certified by (or with certification unambiguously traceable to) a recognized standardizing authority.

Benzoic acid is the sole substance recommended for calibration of an oxygen-bomb calorimeter. For the purpose of checking the overall reliability of the calorimetric measurements, test substances, e.g. n-dodecane, are used. Test substances are mainly used to prove that certain characteristics of a sample, e.g. burning rate or chemical composition, do not introduce bias in the results. A test substance shall have a certified purity and a well-established energy of combustion.

The benzoic acid is burned in the form of pellets. It is normally used without drying or any treatment other than pelletizing; consult the sample certificate. It does not absorb moisture from the atmosphere at relative humidities below 90 %.

The benzoic acid shall be used as close to certification conditions as is feasible; significant departures from these conditions shall be accounted for in accordance with the directions in the certificate. The energy of combustion of the benzoic acid, as defined by the certificate for the conditions utilized, shall be adopted in calculating the effective heat capacity of the calorimeter (see 9.2).

6 Apparatus

6.1 General

The **calorimeter** (see Figure 1) consists of the assembled combustion bomb, the calorimeter can (with or without a lid), the calorimeter stirrer, water, temperature sensor, and leads with connectors inside the calorimeter can required for ignition of the sample or as part of temperature measurement or control circuits. During measurements, the calorimeter is enclosed in a thermostat. The manner in which the thermostat temperature is controlled defines the working principle of the instrument and hence the strategy for evaluation of the corrected temperature rise.

In aneroid systems (systems without a fluid), the calorimeter can, stirrer and water are replaced by a metal block. The combustion bomb itself constitutes the calorimeter in some aneroid systems.

In combustion calorimetric instruments with a high degree of automation, especially in the evaluation of the results, the calorimeter is in a few cases not as well-defined as the traditional, classical-type calorimeter. Using such an automated calorimeter is, however, within the scope of this document as long as the basic requirements are met with respect to calibration conditions, comparability between calibration and fuel experiments, ratio of sample mass to bomb volume, oxygen pressure, bomb liquid, reference temperature of the measurements and repeatability of the results. A print-out of some specified parameters from the individual measurements is essential. Details are given in Annex C.

As the room conditions (temperature fluctuation, ventilation, etc.) may have an influence on the precision of the determination, the manufacturer's instructions for the placing of the instrument shall always be followed.

Equipment, adequate for determinations of calorific value in accordance with this document, is specified in 6.2 to 6.8.

6.2 Calorimeter with thermostat

6.2.1 Combustion bomb, capable of withstanding safely the pressures developed during combustion. The design shall permit complete recovery of all liquid products. The material of construction shall resist corrosion by the acids produced in the combustion of biofuels. A suitable internal volume of the bomb would be from 250 ml to 350 ml.

© ISO 2017 – All rights reserved
Documents
Document Sharing Hub
Full document details: BS EN ISO 18125:2017

WARNING — Bomb parts shall be inspected regularly for wear and corrosion; particular attention shall be paid to the condition of the threads of the main closure. Manufacturers' instructions and any local regulations regarding the safe handling and use of the bomb shall be observed. When more than one bomb of the same design is used, it is imperative to use each bomb as a complete unit. Swapping of parts may lead to a serious accident.

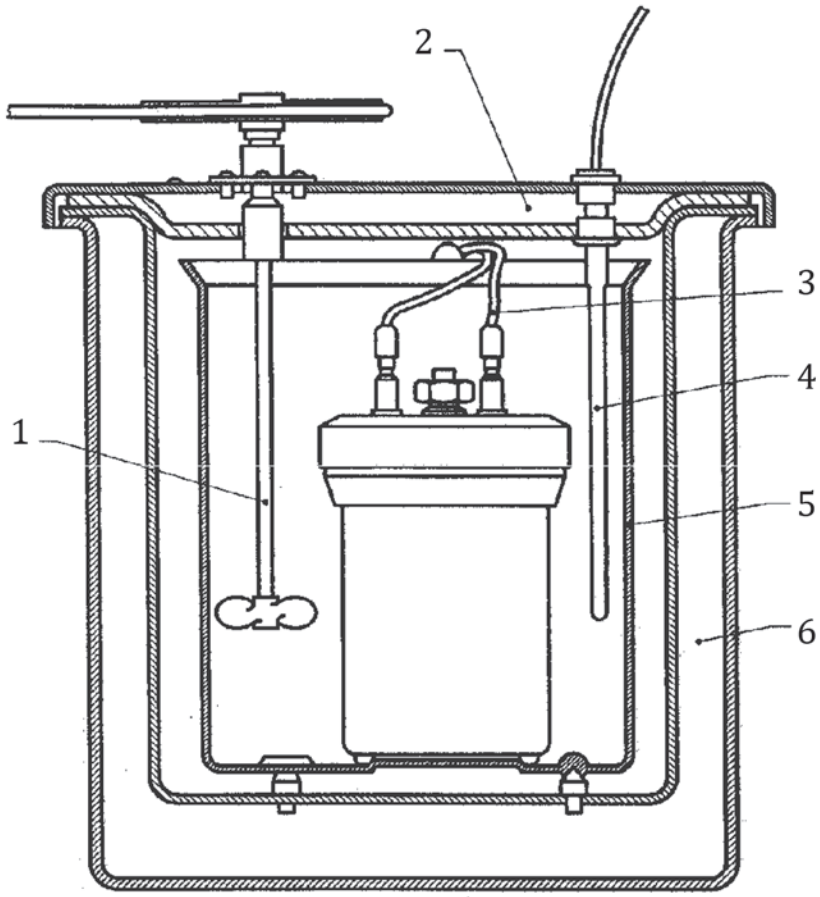

Key

1	stirrer	4	thermometer
2	thermostat lid	5	calorimeter can
3	ignition leads	6	thermostat

Figure 1 — Classical-type bomb combustion calorimeter with thermostat

6.2.2 Calorimeter can, made of metal, highly polished on the outside and capable of holding an amount of water sufficient to completely cover the flat upper surface of the bomb while the water is being stirred. A lid generally helps reduce evaporation of calorimeter water, but unless it is in good thermal contact with the can, it lags behind in temperature during combustion, giving rise to undefined heat exchange with the thermostat and a prolonged main period.

6.2.3 Stirrer, working at constant speed. The stirrer shaft should have a low-heat conduction and/or a low-mass section below the cover of the surrounding thermostat to minimize transmission of heat to or from the system; this is of particular importance when the stirrer shaft is in direct contact with the stirrer motor. When a lid is used for the calorimeter can, this section of the shaft should be above the lid.

The rate of stirring for a stirred-water type calorimeter should be large enough to make sure that hot spots do not develop during the rapid part of the change in temperature of the calorimeter. A rate of

© ISO 2017 – All rights reserved

Documents
Document Sharing Hub
Full document details: BS EN ISO 18125:2017

stirring such that the length of the main period can be limited to 10 min or less is usually adequate (see Annexes A and B).

6.2.4 Thermostat (water jacket), completely surrounding the calorimeter, with an air gap of approximately 10 mm separating calorimeter and thermostat.

The mass of water of a thermostat intended for isothermal operation shall be sufficiently large to outbalance thermal disturbances from the outside. The temperature should be controlled to within ±0,1 K or better throughout the experiment. A passive constant temperature ("static") thermostat shall have a heat capacity large enough to restrict the change in temperature of its water. Criteria for satisfactory behaviour of this type of water jacket are given in Annex B.

NOTE 1 For an insulated metal static jacket, satisfactory properties are usually ensured by making a wide annular jacket with a capacity for water of at least 12,5 l.

NOTE 2 Calorimeters surrounded by insulating material, creating a thermal barrier, are regarded as static-jacket calorimeters.

When the thermostat (water jacket) is required to follow closely the temperature of the calorimeter, it should be of low mass and preferably have immersion heaters. Energy shall be supplied at a rate sufficient to maintain the temperature of the water in the thermostat to within 0,1 K of that of the calorimeter water after the charge has been fired. When in a steady state at 25 °C, the calculated mean drift in temperature of the calorimeter shall not exceed 0,000 5 K/min (see A.3.2).

6.2.5 Temperature measuring instrument, capable of indicating temperature with a resolution of at least 0,001 K so that temperature intervals of 2 K to 3 K can be determined with a resolution of 0,002 K or better. The absolute temperature shall be known to the nearest 0,1 K at the reference temperature of the calorimetric measurements. The temperature measuring device should be linear, or linearized, in its response to changes in temperature over the interval it is used.

As alternatives to the traditional mercury-in-glass thermometers, suitable temperature sensors are platinum resistance thermometers, thermistors, quartz crystal resonators, etc. which together with a suitable resistance bridge, null detector, frequency counter or other electronic equipment provide the required resolution. The short-term repeatability of this type of device shall be 0,001 K or better. Long-term drift shall not exceed the equivalent of 0,05 K for a period of 6 months. For sensors with linear response (in terms of temperature), drift is less likely to cause bias in the calorimetric measurements than are nonlinear sensors.

Mercury-in-glass thermometers shall conform to ISO 651, ISO 652, ISO 1770 or ISO 1771. A viewer with magnification about 5× is needed for reading the temperature with the resolution required.

A mechanical vibrator to tap the thermometer is suitable for preventing the mercury column from sticking (see 8.4). If this is not available, the thermometer shall be tapped manually before reading the temperature.

6.2.6 Ignition circuit

The electrical supply shall be 6 V to 12 V alternating current from a step-down transformer or direct current from batteries. It is desirable to include a pilot light in the circuit to indicate when current is flowing.

Where the firing is done manually, the firing switch shall be of the spring-loaded, normally open type, located in such a manner that any undue risk to the operator is avoided (see warning in 8.4).

6.3 Crucible, of silica, nickel-chromium, platinum or similar unreactive material.

The crucible should be 15 mm to 25 mm in diameter, flat based and about 20 mm deep. Silica crucibles should be about 1,5 mm thick and metal crucibles about 0,5 mm thick.

© ISO 2017 – All rights reserved
Documents
Document Sharing Hub
Full document details: BS EN ISO 18125:2017

If smears of unburned carbon occur, a small low-mass platinum or nickel-chromium crucible, for example 0,25 mm thick, 15 mm in diameter and 7 mm deep, may be used.

6.4 Ancillary pressure equipment

6.4.1 Pressure regulator, to control the filling of the bomb with oxygen.

6.4.2 Pressure gauge (e.g. 0 MPa to 5 MPa), to indicate the pressure in the bomb with a resolution of 0,05 MPa.

6.4.3 Relief valve or bursting disk, operating at 3,5 MPa, and installed in the filling line, to prevent overfilling the bomb.

CAUTION — Equipment for high-pressure oxygen shall be kept free from oil and grease (high vacuum grease recommended by the manufacturer can be used according to the operating manual of the instrument). Do not test or calibrate the pressure gauge with hydrocarbon fluid.

6.5 Timer, indicating minutes and seconds.

6.6 Balances

6.6.1 Balance for weighing the sample, fuse, etc., with a resolution of at least 0,1 mg; 0,01 mg is preferable and is recommended when the sample mass is of the order of 0,5 g or less (see 8.2.1).

6.6.2 Balance for weighing the calorimeter water, with a resolution of 0,5 g (unless water can be dispensed into the calorimeter by volume with the required accuracy; see 8.3).

6.7 Thermostat (optional), for equilibrating the calorimeter water before each experiment to a predetermined initial temperature, within about ±0,3 K.

6.8 Pellet press, capable of applying a force of about 10 t, either hydraulically or mechanically, and having a die suitable to press a pellet having a diameter about 13 mm and a mass of (1,0 ± 0,2) g.

7 Preparation of test sample

Samples for the determination of calorific value shall be sampled in accordance with ISO 18135 and shall be received in the laboratory in sealed air-tight containers or packages. The biofuel sample used for the determination of calorific value shall be the general analysis sample (ground to pass a test sieve with an aperture of 1,0 mm) prepared according to the procedure given in ISO 14780. Sieve with an aperture less than 1,0 mm (0,5 mm or 0,25 mm) might be necessary for some solid biofuels to ensure the requisite repeatability and a complete combustion.

Due to the low density of solid biofuels, they shall be tested in a pellet form. As a test portion, a pellet of mass (1,0 ± 0,2) g is pressed with a suitable force to produce a compact, unbreakable test piece. Alternatively, the test may be carried out in powder form test portion closed in a combustion bag or capsule.

The general analysis sample shall be well mixed and in reasonable moisture equilibrium with the laboratory atmosphere. The moisture content shall either be determined simultaneously with the weighing of the samples for the determination of calorific value, or the sample shall be kept in a small, effectively closed container until moisture analyses are performed, to allow appropriate corrections for moisture in the analysis sample.

Determination of the moisture content (M_{ad}) of the general analysis sample shall be carried out by the method specified in ISO 18134-3.

© ISO 2017 – All rights reserved

Documents
Document Sharing Hub
Full document details: BS EN ISO 18125:2017

A flow chart for a routine calorific value determination can be found in Annex H.

8 Calorimetric procedure

8.1 General

The calorimetric determination consists of two separate experiments, combustion of the calibrant (benzoic acid) and combustion of the biofuel, both under same specified conditions. The calorimetric procedure for the two types of experiment is essentially the same. In fact, the overall similarity is a requirement for proper cancellation of systematic errors caused, for example, by uncontrolled heat leaks not accounted for in the evaluation of the corrected temperature rise θ .

The experiment consists of carrying out quantitatively a combustion reaction (in high-pressure oxygen in the bomb) to defined products of combustion and of measuring the change in temperature caused by the total bomb process.

The temperature measurements required for the evaluation of the corrected temperature rise θ are made during a fore period, a main (= reaction) period, and an after period as outlined in Figure 2. For the adiabatic type calorimeter, the fore and after periods need, in principle, be only as long as required to establish the initial (firing) and final temperatures, respectively (see Annex A). For the isoperibol (isothermal jacket) and the static-jacket type calorimeters, the fore and after periods serve to establish the heat exchange properties of the calorimeter required to allow proper correction for heat exchange between calorimeter and thermostat during the main period when combustion takes place. The fore and after periods then have to be longer; see Annex B.

The power of stirring shall be maintained constant throughout an experiment which calls for a constant rate of stirring. An excessive rate of stirring results in an undesirable increase in the power of stirring with ensuing difficulties in keeping it constant. A wobbling stirrer is likely to cause significant short-term variations in stirring power.

© ISO 2017 – All rights reserved
Documents
Document Sharing Hub
Full document details: BS EN ISO 18125:2017

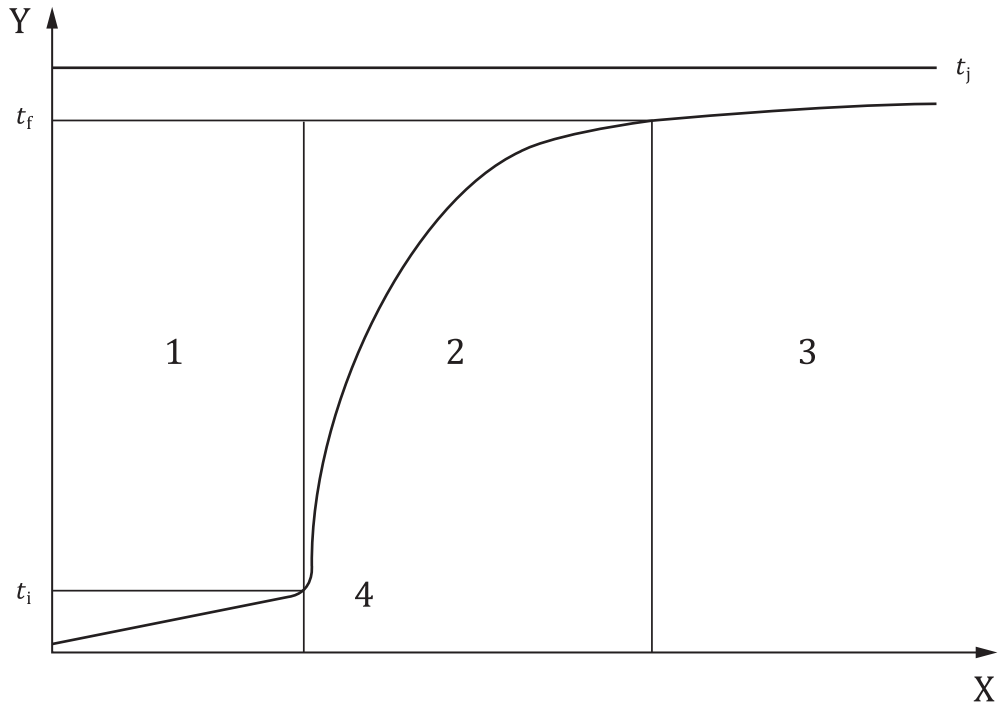

Key

X	time	1	fore period
Y	temperature	2	main period
t_f	temperature at the end of main period	3	after period
t_i	ignition temperature	4	ignition
t_j	jacket temperature		

Figure 2 — Time-temperature curve (isoperibol calorimeter)

During combustion, the bomb head will become appreciably hotter than other parts of the bomb, and it is important to have enough well-stirred water above it to maintain reasonably small temperature gradients in the calorimeter water during the rapid part of the rise in temperature. For aneroid systems, the particular design determines to what extent hot spots may develop (see Annex C).

Certain biofuels may persistently burn incompletely, “exploding” and/or leaving residues that contain significant amounts of unburned sample or soot. By adding known amounts of an auxiliary material (e.g. benzoic acid, n-dodecane or paraffin oil), by using bags or capsules or cotton fuse, by omitting the distilled water from the bomb, or by using a lower oxygen filling pressure, a clean combustion can, in most instances, be achieved.

The auxiliary material shall be chemically stable, have known composition and purity, have a low vapour pressure and have a well-established energy of combustion; the energy should be known to within 0,10 % for particular material used. The amount used should be limited to the minimum amount required to achieve complete combustion of the sample. It should not exceed an amount that contributes half of the total energy in an experiment. The optimum proportion of the sample to auxiliary material depends on the properties of the fuel, and needs to be determined by experiment.

The mass of the auxiliary material shall be determined as accurately as possible so that its contribution can be correctly accounted for; this is particularly important when a hydrocarbon oil is used as its specific energy of combustion is considerably higher than that of the biofuel.

© ISO 2017 – All rights reserved

Documents
Document Sharing Hub
Full document details: BS EN ISO 18125:2017

8.2 Preparing the bomb for measurement

8.2.1 General procedure

Weigh the test portion, pellet or the filled combustion bag or capsule, in the crucible, with a weighing resolution of 0,01 % or better. For 1 g test portions (see 9.2 and 10.2), this means weighing to the nearest 0,1 mg. Weigh the combustible fuse and/or ignition wire either with a precision comparable with that for weighing the test portion, or keep its mass constant, within specified limits, for all experiments (see 9.4 and 9.6.1).

Fasten the ignition wire tautly between the electrodes in the bomb (see also Note hereafter). Check the resistance of the ignition circuit of the bomb; for most bombs, it should not exceed 5 Ω to 10 Ω, measured between the outside connectors of the bomb head, or between the connector for the insulated electrode and the bomb head.

Tie, or attach firmly, the fuse (if needed, see Note hereafter) to the ignition wire, place the crucible in its support and bring the fuse into contact with the sample pellet or capsule. Make sure that the position of the crucible in the assembled bomb will be symmetrical with respect to the surrounding bomb wall.

When the ignition wire is combustible as well as electrically conducting, an alternative procedure may be adopted. A longer piece of wire, enough to make an open loop, is connected to the electrodes. After mounting of the crucible, the loop is brought in contact with the sample pellet or capsule. (In some cases, the ignition process is better controlled when the wire is kept at a small distance above the sample pellet.) Care should be taken to prevent any contact between ignition wire and crucible, in particular when a metal crucible is used since this would result in shorting the ignition circuit. A special fuse is superfluous under these conditions. The resistance of the ignition circuit of the bomb will be increased by a small amount only. For closer details of preparing the bomb, refer also to the manufacturer's instructions.

Add a defined amount of distilled water to the bomb. The amount shall always be exactly the same both in calibration and in determinations (see 9.2.1 and 9.2.2). As a main principle for biofuels, (1,0 ± 0,1) ml distilled water is added into the bomb. With some biofuels (and some calorimeters), the complete combustion can be achieved by omitting the distilled water out from the bomb or by using combustion aid. In some cases, the total absorption of the gaseous combustion products might provide the use of a larger amount of distilled water (e.g. 5 ml).

Assemble the bomb and charge it slowly with oxygen to a pressure of (3,0 ± 0,2) MPa without displacing the original air, or flush the bomb (with the outlet valve open, see manufacturer's instructions) with oxygen for about 30 s, close slowly the valve and charge the bomb to the pressure of (3,0 ± 0,2) MPa. The same procedure shall be used both in calibration and in determinations. If the bomb is inadvertently charged with oxygen above 3,3 MPa, discard the test and begin again.

WARNING — Do not reach over the bomb during charging.

The bomb is now ready for mounting in the calorimeter can.

8.2.2 Using combustion aid

Liquid combustion aid: After the mass of the pellet has been determined, the auxiliary liquid material shall be added drop by drop on the pellet placed in the crucible (allowing the liquid to be absorbed) and the added amount to be determined precisely by weighing.

Solid combustion aid: Use of solid combustion aids (benzoic acid recommended) without combustion bags or capsules is not recommended (a homogenous mixture of sample material and combustion aid before pressing the test pellet might be difficult to achieve).

Combustion bags or capsules: Combustion capsules or bags, or combustible crucibles with precisely known calorific value (gelatin, acetobutyrate or polyethylene) may be used as combustion aids (as such or with, e.g. benzoic acid) according to the manufacturer's instructions. They shall be weighed precisely

© ISO 2017 – All rights reserved
Documents
Document Sharing Hub
Full document details: BS EN ISO 18125:2017

before filling (see also 8.1). The sample material and the combustion aid like benzoic acid shall be mixed cautiously in the bag or capsule before testing.

8.3 Assembling the calorimeter

Bring the calorimeter water to within ±0,3 K of the selected initial temperature and fill the calorimeter can with the required amount. The quantity of water in the calorimeter can shall be the same to within 0,5 g or better in all experiments (see 9.6.1). Make sure that the outer surface of the can is dry and clean before the latter is placed in the thermostat. Mount the bomb in the calorimeter can after the can (containing the correct amount of water) has been placed in the thermostat.

Alternatively, the system may be operated on a constant total-calorimeter-mass basis (see 9.6.2). The bomb is then mounted in the calorimeter can before this is weighed with the water. The total mass of the calorimeter can, with the assembled bomb and the calorimeter water, shall then be within the 0,5 g or better limit in all experiments.

The assembled calorimeter shall contain enough water to well cover the flat upper surface of the bomb head and cap.

NOTE Weighing the water to within 0,5 g applies when the effective heat capacity is in the order of 10 kJ/K.

Check the bomb for gas leaks as soon as its top becomes covered with water. If the gas valves are not fully submerged, check for leaks with a drop of water across the exposed opening. Connect the leads for the ignition circuit and mount the thermometer.

WARNING — If gas escapes from the bomb, discard the test, eliminate the cause of leakage and begin again. Apart from being a hazard, leaks will inevitably lead to erroneous results.

Cooling water, temperature controls, stirrers, etc. are turned on and adjusted, as outlined in the instrument manual. Make sure that the calorimeter stirrer works properly. A period of about 5 min is normally required for the assembled calorimeter to reach a steady state in the thermostat or jacket, irrespective of the type of calorimeter. The criteria for when steady state has been attained depend on the working principle of the calorimeter (see Annexes A and B).

8.4 Combustion reaction and temperature measurements

Start taking temperature readings, to the nearest 0,001 K or better, as soon as the calorimeter has reached steady-state conditions. Readings at 1 min intervals normally suffice to establish the drift rate of the fore period or check the proper functioning of an adiabatic system. When a mercury-in-glass thermometer is used for the temperature measurements, tap the thermometer lightly for about 10 s before each reading and take care to avoid parallax errors.

At the end of the fore period, when the initial temperature t_i has been established, the combustion is initiated by firing the fuse. Hold the switch closed only for as long as it takes to ignite the fuse. Normally, the current is automatically interrupted as the conducting wire starts burning or partially melts. As long as the resistance of the ignition circuit of the combustion bomb is kept at its normal low value, the electrical energy required to initiate the reaction is so small that there is no need to measure and account for it separately.

WARNING — Do not extend any part of the body over the calorimeter during firing, nor for 20 s thereafter.

Continue taking temperature readings at 1 min intervals. The time corresponding to t_i marks the beginning of the main period. During the first few minutes after the charge has been fired, when the temperature is rising rapidly, readings to the nearest 0,02 K are adequate. Resume reading temperatures to the nearest 0,001 K or better as soon as is practicable, but no later than 5 min after the beginning of the main period. Criteria for the length of the fore, main and after periods, and hence the total number of temperature readings required, are given in Annexes A and B.

© ISO 2017 – All rights reserved

Documents
Document Sharing Hub
Full document details: BS EN ISO 18125:2017

8.5 Analysis of products of combustion

At the end of the after period, when all the required temperature readings have been completed, remove the bomb from the calorimeter, release the pressure slowly (following manufacturers' manual) and dismantle the bomb. Examine the interior of the bomb, the crucible and any solid residue carefully for signs of incomplete combustion. Discard the test if unburned sample or any soot deposit is visible. Remove and measure any unreacted pieces of combustible ignition wire.

NOTE Another symptom of incomplete combustion is the presence of carbon monoxide in the bomb gas. Slow release of the gas through a suitable detector tube reveals any presence of carbon monoxide and indicates the concentration level. 0,1 ml/l of carbon monoxide in the combustion gas from a 300 ml bomb corresponds to an error of about 10 J.

Wash the contents of the bomb quantitatively into a beaker with distilled water. Make sure that the underside of the bomb head, the electrodes and the outside of the crucible are also washed.

In the case of calibration experiments, determine the formed nitric acid from the combined bomb washings either by ion-chromatography (as nitrate) as described in ISO 10304-1 or dilute the combined washings to about 50 ml and analyse for nitric acid, e.g. by titration with the sodium hydroxide solution (5.4.3) to a pH of about 5,5 or by using the screened methyl orange solution (5.4.5) as an indicator.

When the "sulphur" and/or nitric acid corrections are based on the actual amounts formed in the bomb process, the bomb washings from fuel combustions are analysed by the procedure described in the next three paragraphs [methods a) to c)] or by an equivalent method. If the sulphur content of the biofuel and the nitric acid correction are known, analysis of the final bomb liquid may be omitted (see 10.1).

a) Determine the formed nitric and sulphuric acid (as nitrate and as sulfate, respectively) by ion-chromatography as in ISO 10304-1.

b) Dilute the combined bomb washings to about 100 ml. Boil the washings to expel carbon dioxide and titrate the solution with barium hydroxide solution (5.4.1) while it is still hot using the phenolphthalein solution (5.4.6) as an indicator. Add 20,0 ml of the sodium carbonate solution (5.4.2), filter the warm solution and wash the precipitate with distilled water. When cold, titrate the filtrate with the hydrochloric acid solution (5.4.4), using the screened methyl orange solution (5.4.5) as an indicator, ignoring the phenolphthalein colour change.

c) If the sulfur content of the biofuel is known, the boiled bomb washings may be titrated, while still hot, with a simplified method using sodium hydroxide solution (5.4.3) and phenolphthalein as indicator (5.4.6).

8.6 Corrected temperature rise θ

8.6.1 Observed temperature rise

The temperature at the end of the main period t_f gives, together with the initial or firing temperature t_i, the observed temperature rise $t_f - t_i$.

8.6.2 Isoperibol and static-jacket calorimeters

In addition to the rise in temperature caused by the processes in the combustion bomb, the observed temperature rise contains contributions from heat exchange between calorimeter and thermostat and

© ISO 2017 – All rights reserved
Documents
Document Sharing Hub
Full document details: BS EN ISO 18125:2017

from stirring power. Allowance for heat exchange is made by the so-called heat-leak correction Δt_{ex} which includes the contribution from stirring power, i.e. Formula (1):

$$t_f - t_i = \theta + \Delta t_{ex} \tag{1}$$

and hence Formula (2):

$$\theta = (t_f - t_i) - \Delta t_{ex} \tag{2}$$

There are various ways of evaluating the term Δt_{ex}. The most common procedures used are the Regnault-Pfaundler and the Dickinson extrapolation methods.

NOTE The Regnault-Pfaundler method automatically accounts for variations in the time-temperature relationship for different types of samples and is hence the more reliable of the two methods.

Detailed instructions for the numerical evaluation of Δt_{ex} and the corrected temperature rise θ for isoperibol and static-jacket calorimeters are given in Annex B. The resulting formulae for Δt_{ex} are summarized in Formulae (3) and (4).

Regnault-Pfaundler method (see B.5.2)

$$\Delta t_{ex} = (\tau_f - \tau_i) \times g_f + \frac{g_i - g_f}{t_{mf} - t_{mi}} \times \left[n \times t_{mf} - \frac{(t_i + t_f)}{2} - \sum_{k=1}^{k=n-1} t_k \right] \tag{3}$$

where

g_i is the drift rate in the fore (initial rating) period, in K/min;

g_f is the drift rate in the after (final rating) period, in K/min;

t_{mi} is the mean temperature in the fore period, in °C;

t_{mf} is the mean temperature in the after period, in °C;

t_i $(= t_0)$ is the temperature at the beginning of the main period (the time for ignition), in °C;

t_f $(= t_n)$ is the temperature at the end of the main period, in °C;

t_k is the successive temperature readings, in °C, taken at 1 min intervals during the main period (t_1 being the temperature 1 min after the beginning of the main period and $t_n = t_f$);

τ_i is the time at the beginning of the main period (time of ignition), in min;

τ_f is the time at the end of the main period, in min;

n is the number of 1 min intervals in the main period.

© ISO 2017 – All rights reserved

Documents
Document Sharing Hub
Full document details: BS EN ISO 18125:2017