BS EN ISO 18135:2017
Incorporating corrigendum May 2017

BSI Standards Publication

Solid Biofuels - Sampling

Documents
Document Sharing Hub

Full document details: BS EN ISO 18135:2017

National foreword

This British Standard is the UK implementation of EN ISO 18135:2017. It is identical to ISO 18135:2017. It supersedes BS EN 14778:2011, which is withdrawn.

The UK participation in its preparation was entrusted to Technical Committee PTI/17, Solid biofuels.

A list of organizations represented on this committee can be obtained on request to its secretary.

This publication does not purport to include all the necessary provisions of a contract. Users are responsible for its correct application.

© The British Standards Institution 2018
Published by BSI Standards Limited 2018

ISBN 978 0 539 00880 7

ICS 27.190; 75.160.40

Compliance with a British Standard cannot confer immunity from legal obligations.

This British Standard was published under the authority of the Standards Policy and Strategy Committee on 30 June 2017.

Amendments/corrigenda issued since publication

Date	Text affected
31 May 2018	Implementation of CEN correction notice 10 May 2017: Superseding reference corrected

Documents
Document Sharing Hub

Full document details: BS EN ISO 18135:2017

EUROPEAN STANDARD

NORME EUROPÉENNE

EUROPÄISCHE NORM

EN ISO 18135

April 2017

ICS 75.160.40

Supersedes EN 14778:2011

English Version

Solid Biofuels - Sampling (ISO 18135:2017)

Biocarburants solides - Échantillonnage (ISO 18135:2017)

Biogene Festbrennstoffe - Probenahme (ISO 18135:2017)

This European Standard was approved by CEN on 6 March 2017.

CEN members are bound to comply with the CEN/CENELEC Internal Regulations which stipulate the conditions for giving this European Standard the status of a national standard without any alteration. Up-to-date lists and bibliographical references concerning such national standards may be obtained on application to the CEN-CENELEC Management Centre or to any CEN member.

This European Standard exists in three official versions (English, French, German). A version in any other language made by translation under the responsibility of a CEN member into its own language and notified to the CEN-CENELEC Management Centre has the same status as the official versions.

CEN members are the national standards bodies of Austria, Belgium, Bulgaria, Croatia, Cyprus, Czech Republic, Denmark, Estonia, Finland, Former Yugoslav Republic of Macedonia, France, Germany, Greece, Hungary, Iceland, Ireland, Italy, Latvia, Lithuania, Luxembourg, Malta, Netherlands, Norway, Poland, Portugal, Romania, Serbia, Slovakia, Slovenia, Spain, Sweden, Switzerland, Turkey and United Kingdom.

EUROPEAN COMMITTEE FOR STANDARDIZATION
COMITÉ EUROPÉEN DE NORMALISATION
EUROPÄISCHES KOMITEE FÜR NORMUNG

CEN-CENELEC Management Centre: Avenue Marnix 17, B-1000 Brussels

© 2017 CEN All rights of exploitation in any form and by any means reserved worldwide for CEN national Members.

Ref. No. EN ISO 18135:2017 E

Documents
Document Sharing Hub

Full document details: BS EN ISO 18135:2017

European foreword

This document (EN ISO 18135:2017) has been prepared by Technical Committee ISO/TC 238 "Solid biofuels" in collaboration with Technical Committee CEN/TC 335 “Solid biofuels” the secretariat of which is held by SIS.

This European Standard shall be given the status of a national standard, either by publication of an identical text or by endorsement, at the latest by October 2017 and conflicting national standards shall be withdrawn at the latest by October 2017.

Attention is drawn to the possibility that some of the elements of this document may be the subject of patent rights. CEN [and/or CENELEC] shall not be held responsible for identifying any or all such patent rights.

This document supersedes EN 14778:2011.

This document has been prepared under a mandate given to CENELEC by the European Commission and the European Free Trade Association.

According to the CEN-CENELEC Internal Regulations, the national standards organizations of the following countries are bound to implement this European Standard: Austria, Belgium, Bulgaria, Croatia, Cyprus, Czech Republic, Denmark, Estonia, Finland, Former Yugoslav Republic of Macedonia, France, Germany, Greece, Hungary, Iceland, Ireland, Italy, Latvia, Lithuania, Luxembourg, Malta, Netherlands, Norway, Poland, Portugal, Romania, Serbia, Slovakia, Slovenia, Spain, Sweden, Switzerland, Turkey and the United Kingdom.

Endorsement notice

The text of ISO 18135:2017 has been approved by CEN as EN ISO 18135:2017 without any modification.

Documents
Document Sharing Hub
Full document details: BS EN ISO 18135:2017

Contents

Page

Foreword ... **v**
Introduction ... **vi**
1 Scope ... **1**
2 Normative references ... **1**
3 Terms and definitions ... **1**
4 Symbols ... **2**
5 Principle ... **3**
6 Establishing a sampling scheme (sampling plan) ... **4**
6.1 Principle ... 4
6.2 Full sampling plan ... 5
6.3 Brief sampling plan ... 5
6.4 Division of lots ... 5
7 Visual inspection ... **6**
8 Number of increments ... **6**
8.1 General ... 6
8.2 Primary increment variance (V_i) ... 7
8.3 Preparation and testing variance (V_{PT}) ... 8
8.4 Overall precision (P_L) ... 8
8.5 Calculation of number of increments per (sub-) lot ... 8
9 Calculation of the size of increment ... **10**
10 Combined sample — Calculation of the volume of the combined sample ... **10**
11 Sampling equipment ... **11**
11.1 General ... 11
11.2 Equipment for manual sampling ... 11
11.2.1 Sampling box for falling-stream ... 11
11.2.2 Scoops ... 12
11.2.3 Shovels ... 13
11.2.4 Forks ... 14
11.2.5 Grabs ... 15
11.2.6 Probes (thieves) ... 16
11.2.7 Pipes (spears) ... 16
11.2.8 Frames ... 17
11.2.9 Hooks ... 17
11.2.10 Drills (augers) ... 18
11.3 Equipment for mechanical sampling ... 19
11.3.1 Use of coal sampling standards and checking for bias ... 19
11.3.2 Falling-stream sampler ... 19
11.3.3 Cross-belt sampler ... 20
11.3.4 Mechanical probes ... 21
11.3.5 Mechanical drills ... 21
12 Sampling in practice ... **21**
12.1 General ... 21
12.2 Methods for sampling stationary material ... 22
12.2.1 Sampling from small packages (<50 kg) ... 22
12.2.2 Sampling from containers, lorries and wagons ... 22
12.2.3 Sampling from stockpiles ... 23
12.2.4 Sampling from ships and barges ... 24
12.2.5 Sampling from bales ... 25
12.3 Methods for sampling moving material ... 25

AVA Documents
Document Sharing Hub

© ISO 2017 – All rights reserved

Full document details: BS EN ISO 18135:2017

12.3.1 General ... 25
12.3.2 Sampling from falling streams ... 25
12.3.3 Sampling from conveyor belts ... 26
12.3.4 Sampling from bucket conveyors, drag conveyors, bucket loaders or grabs ... 26
12.4 Sampling of roundwood ... 26
12.4.1 General method ... 26
12.4.2 Method for fast moisture-content determination ... 27

13 Sample generation for combined samples and laboratory samples ... 28

14 Performance characteristics ... 28

15 Handling and storage of samples ... 28
15.1 Packaging, storing and transport of samples ... 28
15.2 Identification/labelling ... 29

16 Sampling certificates ... 29

Annex A (informative) **Model sampling plan and sampling certificate ... 30**

Annex B (informative) **Sampling from large stockpiles ... 31**

Annex C (informative) **Bulk densities of solid biofuels ... 32**

Annex D (informative) **Reference values for V_i and V_{PT} ... 33**

Annex E (informative) **Guidelines for the number of increments to be taken ... 36**

Annex F (informative) **Quality parameters for various solid biofuels in BIONORM projects and large shipments of wood pellets ... 43**

Annex G (informative) **Single delivery sampling ... 53**

Annex H (informative) **Continuous delivery sampling ... 54**

Bibliography ... 56

© ISO 2017 – All rights reserved

Documents
Document Sharing Hub
Full document details: BS EN ISO 18135:2017

Foreword

ISO (the International Organization for Standardization) is a worldwide federation of national standards bodies (ISO member bodies). The work of preparing International Standards is normally carried out through ISO technical committees. Each member body interested in a subject for which a technical committee has been established has the right to be represented on that committee. International organizations, governmental and non-governmental, in liaison with ISO, also take part in the work. ISO collaborates closely with the International Electrotechnical Commission (IEC) on all matters of electrotechnical standardization.

The procedures used to develop this document and those intended for its further maintenance are described in the ISO/IEC Directives, Part 1. In particular, the different approval criteria needed for the different types of ISO documents should be noted. This document was drafted in accordance with the editorial rules of the ISO/IEC Directives, Part 2 (see www.iso.org/directives).

Attention is drawn to the possibility that some of the elements of this document may be the subject of patent rights. ISO shall not be held responsible for identifying any or all such patent rights. Details of any patent rights identified during the development of the document will be in the Introduction and/or on the ISO list of patent declarations received (see www.iso.org/patents).

Any trade name used in this document is information given for the convenience of users and does not constitute an endorsement.

For an explanation on the voluntary nature of the standards, the meaning of ISO specific terms and expressions related to conformity assessment, as well as information about ISO's adherence to the World Trade Organization (WTO) principles in the Technical Barriers to Trade (TBT) see the following URL: www.iso.org/iso/foreword.html.

This document was prepared by Technical committee ISO/TC 238, *Solid biofuels*.

© ISO 2017 – All rights reserved

Documents
Document Sharing Hub
Full document details: BS EN ISO 18135:2017

Introduction

The objective of this document is to provide unambiguous and clear principles for sampling solid biofuels. It also aims to serve as a tool to enable efficient trading of biofuels and a good understanding between seller and buyer, as well as a tool for communication with equipment manufacturers. It will also facilitate authority permission procedures and reporting.

This document is made for all stakeholders.

Solid biomass is defined in ISO 16559 and according to the specification in ISO 17225-1 covers organic, non-fossil material of biological origin which may be used as fuel for heat and electrical generation.

This document was developed with significant content from EN 14778:2011.

© ISO 2017 – All rights reserved
Documents
Document Sharing Hub
Full document details: BS EN ISO 18135:2017

Solid Biofuels — Sampling

1 Scope

This document describes methods for preparing sampling plans and certificates, as well as taking samples of solid biofuels, for example, from the place where the raw materials grow, from production plant, from deliveries, e.g. lorry loads, or from stock. It includes both manual and mechanical methods, and is applicable to solid biofuels that are either:

— fine (particle sizes up to about 10 mm) and regularly shaped particulate materials that can be sampled using a scoop or pipe, for example, sawdust, olive stones and wood pellets;

— coarse or irregularly shaped particulate materials (particle sizes up to about 200 mm) that can be sampled using a fork or shovel, for example, wood chips and nut shells, forest residue chips, and straw;

— baled materials, for example, baled straw or grass;

— large pieces (particle sizes above 200 mm) that are either picked manually or automatically;

— vegetable waste, fibrous waste from virgin pulp production and from production of paper from pulp that has been dewatered;

— thermally treated and densified biomass materials;

— roundwood.

This document is not applicable to airborne dust from solid biofuels. It may be possible to use this document for other solid biofuels.

The methods described in this document may be used, for example, when the samples are to be tested for moisture content, ash content, calorific value, bulk density, durability, particle size distribution, ash melting behaviour and chemical composition.

2 Normative references

The following documents are referred to in the text in such a way that some or all of their content constitutes requirements of this document. For dated references, only the edition cited applies. For undated references, the latest edition of the referenced document (including any amendments) applies.

ISO 13909-8, *Hard coal and coke — Mechanical sampling — Part 8: Methods of testing for bias*

ISO 14780, *Solid biofuels — Sample preparation*

ISO 16559, *Solid biofuels — Terminology, definitions and descriptions*

ISO 21398, *Hard coal and coke — Guidance to the inspection of mechanical sampling systems*

3 Terms and definitions

For the purposes of this document, the terms and definitions given in ISO 16559 and the following apply.

ISO and IEC maintain terminological databases for use in standardization at the following addresses:

— IEC Electropedia: available at http://www.electropedia.org/

— ISO Online browsing platform: available at http://www.iso.org/obp

© ISO 2017 – All rights reserved

Documents
Document Sharing Hub
Full document details: BS EN ISO 18135:2017

3.1
bias
systematic error that leads to the average value of a series of results being persistently higher or persistently lower than those that are obtained using a reference sampling method

3.2
large stockpile
stockpile with a capacity >40 t

3.3
nominal top size
aperture size of the sieve through which at least 95 % by mass of the material passes

Note 1 to entry: For pellets the diameter is used to determine the nominal top size.

Note 2 to entry: Includes additional information not found in ISO 16559.

3.4
overall precision
closeness of agreement between independent test results obtained under stipulated conditions; including sample preparation and sample analysis

Note 1 to entry: A determination might be made with great precision and the standard deviation of a number of determinations on the same sub-lot might, therefore, be low; but such results are accurate only if they are free from bias.

4 Symbols

d_{95}	nominal top size biofuel, in mm
d_i	difference between individual pair members
m_{lot}	mass of the lot or sub-lot, tonne
n	number of increments per (sub-) lot
n_{min}	minimum number of increments per (sub-) lot
n_P	number of pairs (for estimating V_{PT})
n_{mp}	maximum practicable number of increments per sub-lot
N_L, N_{SL}	number of lots/sub-lots
P_L	overall precision for the sampling, sample preparation and testing for the whole biofuel lot at 95 % confidence level
P_{SL}	similar to P_L but then for the sub-lot
S	sample estimate of the population standard deviation
V_{SPT}	total variance of the results for replicate samples
$Vol_{Combined\ Sample}$	volume for the combined sample, l
Vol_{incr}	volume of an increment, l
Vol_{min}	minimum volume of increment, l
V_i	primary increment variance

© ISO 2017 – All rights reserved
Documents
Document Sharing Hub
Full document details: BS EN ISO 18135:2017

V_{PT}	preparation and testing variance
W	width of a sampling tool, mm
X_i	value of the analyzed parameter

5 Principle

The main principle of correct sampling is to obtain a representative sample (samples) from the whole lot concerned. Every particle in the lot or sub-lot to be represented by the sample should have an equal probability of being included in the sample. In order to do so, a sampling plan is needed. Figure 1 shows the actions needed for the development of a sampling plan. When sampling is to be carried out according to the same plan repeatedly or continuously (e.g. daily), a full sampling plan shall be prepared according to 6.2 (it is necessary to do this only once). A brief sampling plan shall be prepared for routine use according to 6.3 (same type of sampling object or situation occasionally). In the case of a new material or supplier, the existing plan shall be checked and updated or a new full sampling plan shall be developed.

© ISO 2017 – All rights reserved

Documents
Document Sharing Hub
Full document details: BS EN ISO 18135:2017

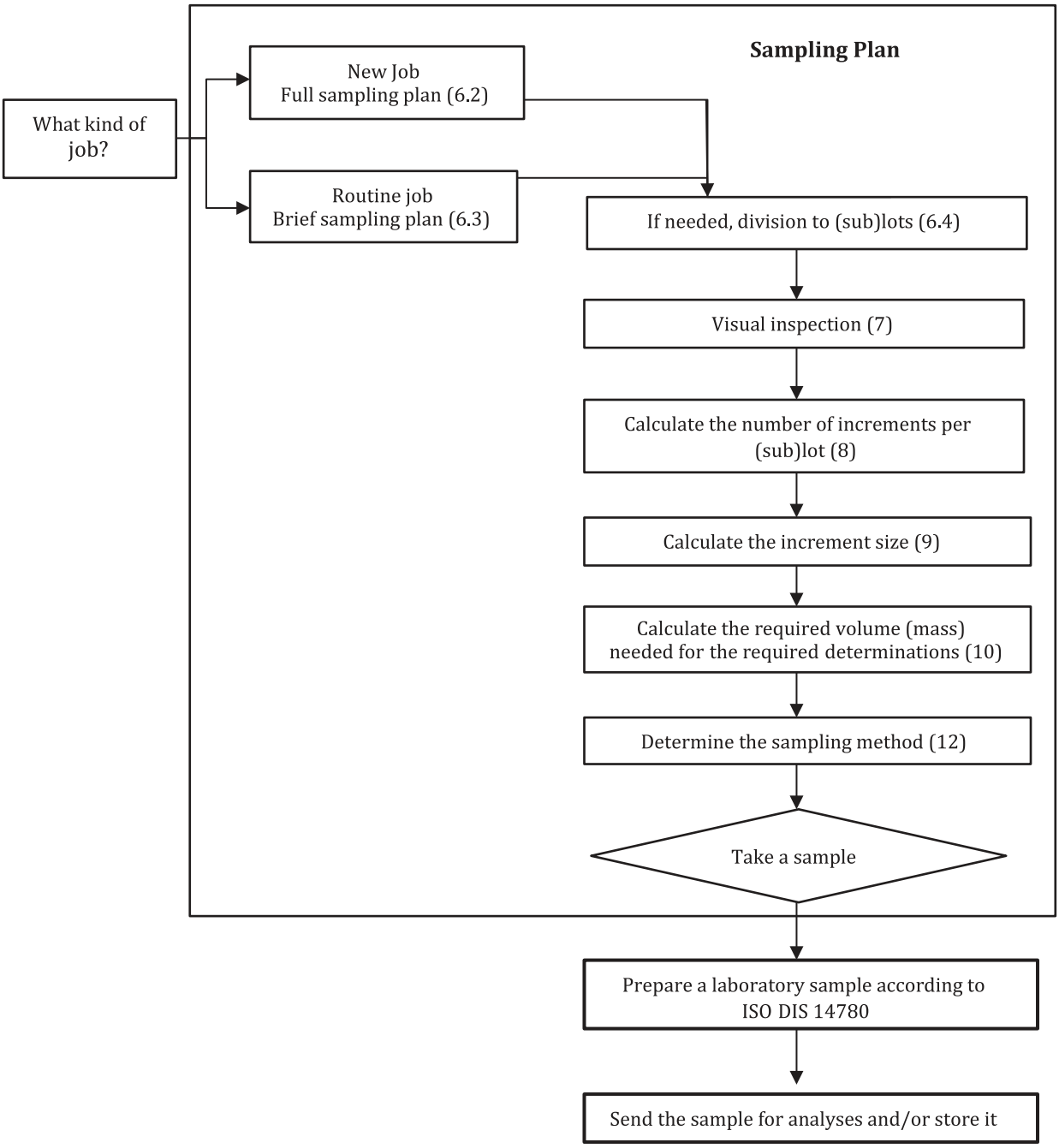

Figure 1 — Procedure for sampling

NOTE The numbers in Figure 1 refer to the clauses in this document.

6 Establishing a sampling scheme (sampling plan)

6.1 Principle

The sampler shall prepare a full sampling plan either by copying the forms presented in Annex A or by preparing his own forms or documents containing the appropriate items selected from those shown in Annex A. Each sampling plan shall be given a unique reference number or a code/name.

© ISO 2017 – All rights reserved
Documents
Document Sharing Hub
Full document details: BS EN ISO 18135:2017

6.2 Full sampling plan

A Model Sampling Plan is presented in Annex A as forms that are to be completed by the sampler. Once completed, these forms become sampling certificates.

6.3 Brief sampling plan

The sampling plan shall include the following key elements:

a) reference to the full sampling plan (Annex A);

b) unique identification number of the sample;

c) date and time of sampling;

d) identity of the biofuel supplier;

e) identification number of the lot or the sub-lot;

f) type of biofuel (wood pellet, briquette, chips, etc.).

Also consider including the following items:

g) name of the sampler;

h) mass or volume of the sub-lot or the lot;

i) identity of the carrier (transport company);

j) storage information of the lot (like weather conditions, storage inside or outside);

k) sampling technique, e.g. shovelling, cross stream cutter, hammer sampler, probe, stopped belt, etc.;

l) any other details that change from sample to sample;

m) source (pile, silo, cargo hold, train car, truck/lorry, etc.) and location (centre, bottom, etc.) where the sample was obtained.

6.4 Division of lots

The lot may be sampled as a whole, resulting in one sample, or divided into a number of sub-lots resulting in a possible sample from each. In the case of manual sampling a lot may be sampled as a whole only when it has a maximum of 2 500 t or as a series of sub-lots each to a maximum of 2 500 t, e.g. fuel dispatched or delivered over a period of time, a ship load, a train load, a wagon load, or fuel produced during a certain period, e.g. a shift.

Such division into a number of sub-lots can be necessary to

a) achieve the required precision (calculated by the procedure in 8.2),

b) maintain the integrity of the sample by enclosing in an airtight plastic bag or container, e.g. avoiding bias that can result from the loss of moisture due to standing or changing of calorific value caused by biological activity,

c) create convenience when sampling lots over a long period, e.g. on a shift basis,

d) keep sample masses manageable, taking into account the maximum lifting capacity,

e) distinguish different components of a mixture of fuels, e.g. different biofuel types within one lot, and

f) be consistent in sampling from several specified locations of the lot to avoid bias from particle segregation during loading.

© ISO 2017 – All rights reserved

Documents
Document Sharing Hub
Full document details: BS EN ISO 18135:2017

In the case of mechanical sampling, e.g. from large shipments, the maximum (sub-) lot size should be decided by the parties involved. For example, a maximum 5 000 t sub-lot is advisable.

EXAMPLE 1 Consider a power station that receives 140 lorry-loads of wood chips a month totalling 3 500 t. In this example, four sub-lots can be manually sampled where a sub-lot could be the quantity of fuel delivered in a week (about 35 lorry-loads).

EXAMPLE 2 Consider a single shipment of 46 000 t of wood pellets. In this example, 10 sub-lots of 4 600 t each can be mechanically sampled or 19 sub-lot samples, each representing 2 421 t, would need to be taken manually.

7 Visual inspection

Visual inspection shall be used for the choice or verification of the classification of the solid biofuels. Based on the sampling plan, verification or selection of the sampling equipment and the sampling method shall also be made by visual inspection. If the biofuel consists of a mixture of substantially different materials, or if it contains impurities (such as soil or pieces of metal), this shall be reported in the sampling certificate. If the biofuel type or its quality is diverging strongly from the one expected, the sampler shall report without any delay to the appropriate party for further instructions.

NOTE Photographs of deviation noted during visual inspection can assist with documentation.

8 Number of increments

8.1 General

In all methods of sampling, sampling preparation and analysis, errors are incurred and the experimental results obtained from such methods for any given parameter deviate from the true value of that parameter. As the true value cannot be known exactly, it is not possible to assess the accuracy of the experimental results, i.e. the closeness with which they agree with the true value. However, it is possible to make an estimate of the precision of the experimental results, i.e. the closeness with which the results of a series of experiments made on the same fuel, agree among themselves.

It is possible to design a sampling scheme that, in principle, can achieve a desired level of precision with a material determined lower limit.

Precision is the closeness of agreement between the results obtained by applying the experimental procedure several times under prescribed conditions, and is a characteristic of the sampling scheme used and the variability of the biofuel being sampled. The smaller the random errors of the scheme, the more precise the scheme is. A commonly accepted index of precision is two times the sample estimate of the population standard deviation, and this index of precision is used throughout this document.

If a large number of replicate samples are taken from a sub-lot of biofuel, prepared and analyzed separately, the precision of a single observation, P, is given by Formula (1):

$$P = 2s = 2\sqrt{V_{\mathrm{SPT}}} \tag{1}$$

where

s is the sample estimate of the population standard deviation;

V_{SPT} is the total variance of the results for replicate samples.

© ISO 2017 – All rights reserved
Documents
Document Sharing Hub
Full document details: BS EN ISO 18135:2017

Here V_{SPT} is given by Formula (2):

$$V_{SPT} = \frac{V_i}{N_{SL} \cdot n} + \frac{V_{PT}}{N_{SL}} \tag{2}$$

Therefore, the final overall precision, P_L, for the total quantity of biofuel:

$$P_L = 2\sqrt{\frac{V_i}{N_{SL} n} + \frac{V_{PT}}{N_{SL}}} \tag{3}$$

where

P_L is the overall precision for the sampling, sample preparation and testing for the whole biofuel lot at 95 % confidence level;

V_i is the primary increment variance;

n is the number of increments per (sub-) lot;

N_{SL} is the number of sub-lots in the lot;

V_{PT} is the sample preparation and testing variance.

In the case where the total quantity of biofuel is divided into sub-lots, all sub-lots shall be sampled. The number of sub-lots can be 1.

8.2 Primary increment variance (V_i)

The primary increment variance, V_i, depends upon the type and nominal top size of the fuel, the degree of pre-treatment and mixing, the absolute value of the parameter to be determined and the mass of increment taken. In general, the increment variance (V_i) is different for the different parameters (in the same material) in practice. The calculation of the minimum number of increments should be based on different numbers of V_i, V_{PT} and P_L for each of the required parameters and the highest minimum number of increments should be selected (see also 8.5 for the calculation of minimum number of increments).

The value of the primary increment variance, V_i, required for the calculation of the minimum number of increments using Formula (6) or precision using Formula (3) can be obtained by one of the following:

a) Determining it directly on the biofuel to be sampled by taking at least 30 increments spread over an entire lot of the same type of fuel and analyzing each increment separately on the required parameters, preferably ash (dry basis) and total moisture.

$$V_i = \frac{1}{n-1}\left[\sum x_i^2 - \frac{\left(\sum x_i\right)^2}{n}\right] - V_{PT} \tag{4}$$

where x_i is the value of the analyzed parameter.

See E.3 for an example in determining the V_i.

b) Assuming values of V_i from similar materials or from previous characterization experience with similar fuel handling and sample preparation. The assumptions should preferably be verified afterwards if possible.

c) Assuming values of V_i listed in Annex D for the same type of materials. The assumptions should preferably be verified afterwards if possible.

© ISO 2017 – All rights reserved

Documents
Document Sharing Hub
Full document details: BS EN ISO 18135:2017

8.3 Preparation and testing variance (V_{PT})

The value of the sample preparation and testing variance, V_{PT}, required for the calculation of the minimum number of increments using Formula (6) or precision using Formula (3) can be obtained by one of the following:

a) Determining it directly on the fuel to be sampled by constituting at least 20 sub-samples spread over the entire lot of the same type of fuel. Each sub-sample is divided into two parts (constituting a pair) and prepared so that split portions of each sub-sample are taken at the first division stage. Each portion shall be prepared and tested for the parameters of interest, preferably ash (dry basis) and total moisture. The same analytical methods are applied as are used in routine operations. The difference between the two results shall be calculated for each pair and the preparation and testing variance, V_{PT}, can be calculated as follows:

$$V_{PT} = \frac{\sum d_i^{\,2}}{2n_P} \tag{5}$$

where

d_i is the difference between individual pair members;

n_p is the number of pairs.

See Table F.14 for an example for the determination of V_{PT}.

b) Assuming values of V_{PT} from similar materials or from previous characterization experience with similar fuel handling and sample preparation. The assumptions should preferably be verified afterwards if possible.

c) Assuming values of V_{PT} listed in Annex D for the same type of materials. The assumptions should preferably be verified afterwards if possible.

8.4 Overall precision (P_L)

The required overall precision for each relevant parameter on a lot should be agreed upon between parties concerned. In the absence of such an agreement, the values given in Tables D.1 to D.10 may be assumed. By keeping track of the results of the analyses, changes in the composition over time can be identified, which could be an indication to re-evaluate V_i and V_{PT}. This can be done using 8.2 and 8.3.

8.5 Calculation of number of increments per (sub-) lot

Determine the number of sub-lots required for practical reasons and then estimate the number of increments for a desired overall precision by transposing Formula (6) (rounded up):

$$n_{min} = \frac{4V_i}{N_{SL}P_L^{\,2} - 4V_{PT}} \tag{6}$$

© ISO 2017 – All rights reserved
Documents
Document Sharing Hub
Full document details: BS EN ISO 18135:2017

where

N_{SL} is the number of sub-lots in the lot; when the lot is not divided, $N_{SL} = 1$;

n_{min} is the (minimum) number of increments per sub-lot, or per lot if the lot is not divided into sub-lots; ($N = 1$) if calculated, if n_{min} is less than 10, it shall be set to $n_{min} = 10$ unless agreed upon otherwise;

V_i is the primary increment variance;

P_L is the overall precision for the sampling, sample preparation and testing for the whole biofuel lot at 95 % confidence level;

V_{PT} is the preparation and testing variance.

NOTE Formula (3) is rewritten to yield Formula (6).

Parties can agree on a different minimum number of increments; this can also be below 10. Parties should be aware of the possibility that extracting increments of extreme content will influence the final measured value. This is especially possible for materials that segregate where fines concentrate at certain regions of the bulk such as the centre.

Examples utilizing this formula are given in E.3.

A calculated value of n_{min} of infinity or a negative number indicates that the errors of preparation and testing are such that the required precision cannot be achieved with this number of sub-lots. In such cases, or if n_{min} is impracticably large, reduce the errors of sample preparation and testing, by agreeing on a higher overall precision, or increase the number of sub-lots by one of the following means.

a) Choose a new number of sub-lots corresponding to a convenient sub-lot mass, recalculate n_{min} from Formula (6) and repeat this process until n_{min} is a practicable number.

b) Decide on the maximum practicable number of increments per sub-lot, n_{mp}, and calculate N_{SL} according to Formula (7):

$$N_{SL} = \frac{4(V_i + n_{mp} V_{PT})}{n_{mp} P_L^{\,2}} \tag{7}$$

Adjust N_{SL} upwards if necessary to a convenient number and recalculate n_{min}. A calculation example is found in E.3.

As described in 8.1 to 8.3, the tables in Annex D show reference or default values for V_i and V_{PT} when no other information is available. Tables D.1 to D.10 show reference values for V_i and V_{PT} when no other information is available. It is recommended to measure the V_i and V_{PT} per type, group and/or supplier of biofuel.

The required overall precision on a lot should be agreed between the parties concerned. In the absence of such agreement, the values given in Tables D.1 to D.10 may be assumed.

By keeping track of the results of the analyses, changes in the composition over time can be identified, which could be an indication to (re-)evaluate V_i and V_{PT}.

For small storages in cellars, silos or bunkers which are difficult to enter and to take samples the number of increment is reduced (Annex D is not applicable for small storages). The variance for the different parameters shall be calculated according to 8.2 and individually stated.

© ISO 2017 – All rights reserved

Documents
Document Sharing Hub
Full document details: BS EN ISO 18135:2017

9 Calculation of the size of increment

The minimum volume of the increment shall be:

$$\mathrm{Vol}_{\mathrm{incr}} = 0{,}5 \qquad \text{for } d_{95} < 10 \tag{8}$$

$$\mathrm{Vol}_{\mathrm{incr}} = 0{,}05 \times d_{95} \qquad \text{for } d_{95} \geq 10 \tag{9}$$

where

$\mathrm{Vol}_{\mathrm{incr}}$ is the minimum volume of the increment, l;

d_{95} is the nominal top size, mm.

The sampler shall estimate and record the appropriate sampling tool. Ensure that samples are large enough for analyses.

10 Combined sample — Calculation of the volume of the combined sample

The sampler shall refer to 8.5 for the minimum number of increments, $n_{\min}$, and the minimum volume of the individual increments, $\mathrm{Vol}_{\mathrm{incr}}$, according to Clause 9 for the circumstances covered by the sampling plan.

The sampler shall consider the tests which have to be done and calculate the required volume (mass) needed for the required determinations ($\mathrm{Vol}_{\mathrm{req}}$). In particular, the calculation shall take into account the need in some test methods for duplicate test portions, and for extra material to be available in case dubious results are obtained.

The calculated volume of the combined sample shall be of such a size that sufficient material is provided for all the tests to be performed, that is $\mathrm{Vol}_{\mathrm{Combined\ Sample}} > \mathrm{Vol}_{\mathrm{req}}$. Therefore the minimum sample volume should be estimated from the sampling plan. If the calculated volume is too small, the size or the number of increments shall be increased. When the increments are reduced in volume before they are added to the combined sample, the volume $\mathrm{Vol}_{\mathrm{incr}}$ used in this calculation shall be the volume obtained after the reduction. The minimum increment volumes of Clause 9 should be used.

The sampler shall calculate the volume, $\mathrm{Vol}_{\mathrm{Combined\ Sample}}$ for the combined sample:

$$\mathrm{Vol}_{\mathrm{Combined\ Sample}} = n_{\min} \times \mathrm{Vol}_{\mathrm{incr}} \tag{10}$$

where

$\mathrm{Vol}_{\mathrm{Combined\ Sample}}$ is the volume for the combined sample, l;

$n_{\min}$ is the minimum number of increments;

$\mathrm{Vol}_{\mathrm{incr}}$ is the minimum volume of the individual increments, l.

Table A.1 can be used to record the results of the calculation. Annex C gives typical bulk densities of biofuels.

© ISO 2017 – All rights reserved
Documents
Document Sharing Hub
Full document details: BS EN ISO 18135:2017

11 Sampling equipment

11.1 General

The equipment shall enable the sampler to take unbiased increments to provide a representative sample.

The opening of the sampling device should be at least 2,5 times the nominal top size and should be large enough for normal oversized material particles to enter the sampling device. The volume of the sampling device shall comply with the minimum required increment volume, Vol_{incr}, as described in Clause 9. The pellet diameter shall be considered as nominal top size for sampling and sample preparation and the opening of the equipment shall be large enough for the longest pellets to enter.

Sampling tools shall be robust, and be able to withstand physical force, wear and prolonged use without compromising functionality.

All moving parts should be accessible to inspection and maintenance.

It is recommended that mechanical sampling equipment and manual sampling procedures should be tested for bias after implementation, and this should be repeated with a frequency that reflects the consequences of a possible bias. Bias testing of mechanical sampling equipment can be done according to ISO 13909-8, and manual sampling procedures according to the same principles.

The choice of sampling tool shall enable the sampler to extract the biofuel safely.

11.2 Equipment for manual sampling

11.2.1 Sampling box for falling-stream

The sampling box shall have a square or rectangular opening at the top. The opening *W* of the top of the sampling box shall be at least 2,5 times the nominal top size and should be large enough for normal oversized material particles to enter the sampling device. The dimensions of the top opening of the sampling box shall be large enough so that the box cuts the whole of the stream to be sampled. The height of the sampling box shall be large enough to ensure that the box does not become full during sampling of the increment. The sampling box shall be provided with a handle or some other means of support (for instance mounted on rails) that enables the sampler to pass the box safely through the whole cross section of the falling stream of the biofuel to be sampled. Figure 2 shows an example of a sampling box.

© ISO 2017 – All rights reserved

Documents
Document Sharing Hub
Full document details: BS EN ISO 18135:2017

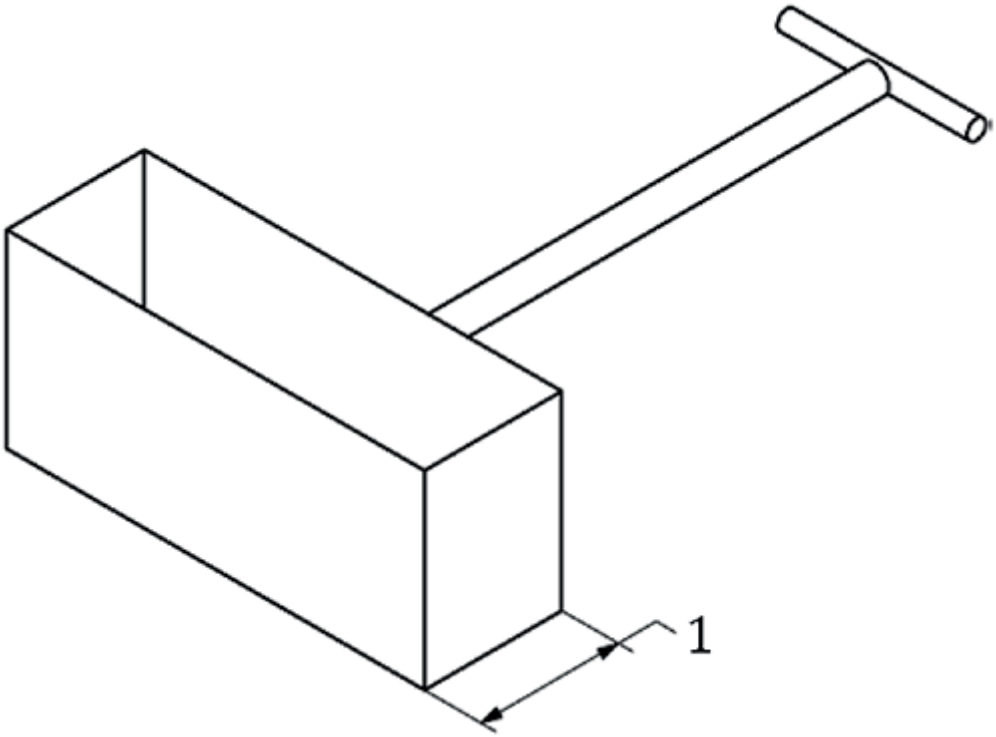

Key

1 width of the sampling box

Figure 2 — Example of a sampling box

For biofuel with large particle size, or high material flows, sampling boxes might become too big and heavy for manual sampling and mechanical sampling is recommended.

11.2.2 Scoops

A scoop can be designed as illustrated in Figure 3, complying with the general requirements for equipment design.

© ISO 2017 – All rights reserved
Documents
Document Sharing Hub
Full document details: BS EN ISO 18135:2017