BS EN ISO 18526-2:2020

BSI Standards Publication

Eye and face protection – Test methods

Part 2 : Physical optical properties

Documents
Document Sharing Hub

Full document details: BS EN ISO 18526-2:2020

National foreword

This British Standard is the UK implementation of EN ISO 18526-2:2020. It is identical to ISO 18526-2:2020.

The UK participation in its preparation was entrusted to Technical Committee PH/2/1, Sunglasses and Sports Vision.

A list of organizations represented on this committee can be obtained on request to its secretary.

This publication does not purport to include all the necessary provisions of a contract. Users are responsible for its correct application.

© The British Standards Institution 2020
Published by BSI Standards Limited 2020

ISBN 978 0 580 92459 0

ICS 13.340.20

Compliance with a British Standard cannot confer immunity from legal obligations.

This British Standard was published under the authority of the Standards Policy and Strategy Committee on 31 March 2020.

Amendments/corrigenda issued since publication

Date	Text affected

Documents
Document Sharing Hub

Full document details: BS EN ISO 18526-2:2020

EUROPEAN STANDARD

NORME EUROPÉENNE

EUROPÄISCHE NORM

EN ISO 18526-2

March 2020

ICS 13.340.20

English Version

Eye and face protection - Test methods - Part 2 : Physical optical properties (ISO 18526-2:2020)

Protection des yeux et du visage - Méthodes d'essai - Partie 2: Propriétés optiques physiques (ISO 18526-2:2020)

Augen- und Gesichtsschutz - Prüfverfahren - Teil 2: Physikalisch optische Eigenschaften (ISO 18526-2:2020)

This European Standard was approved by CEN on 25 January 2020.

CEN members are bound to comply with the CEN/CENELEC Internal Regulations which stipulate the conditions for giving this European Standard the status of a national standard without any alteration. Up-to-date lists and bibliographical references concerning such national standards may be obtained on application to the CEN-CENELEC Management Centre or to any CEN member.

This European Standard exists in three official versions (English, French, German). A version in any other language made by translation under the responsibility of a CEN member into its own language and notified to the CEN-CENELEC Management Centre has the same status as the official versions.

CEN members are the national standards bodies of Austria, Belgium, Bulgaria, Croatia, Cyprus, Czech Republic, Denmark, Estonia, Finland, France, Germany, Greece, Hungary, Iceland, Ireland, Italy, Latvia, Lithuania, Luxembourg, Malta, Netherlands, Norway, Poland, Portugal, Republic of North Macedonia, Romania, Serbia, Slovakia, Slovenia, Spain, Sweden, Switzerland, Turkey and United Kingdom.

EUROPEAN COMMITTEE FOR STANDARDIZATION
COMITÉ EUROPÉEN DE NORMALISATION
EUROPÄISCHES KOMITEE FÜR NORMUNG

CEN-CENELEC Management Centre: Rue de la Science 23, B-1040 Brussels

© 2020 CEN All rights of exploitation in any form and by any means reserved worldwide for CEN national Members.

Ref. No. EN ISO 18526-2:2020 E

Documents
Document Sharing Hub

Full document details: BS EN ISO 18526-2:2020

European foreword

This document (EN ISO 18526-2:2020) has been prepared by Technical Committee ISO/TC 94 "Personal safety -- Personal protective equipment" in collaboration with Technical Committee CEN/TC 85 “Eye protective equipment” the secretariat of which is held by AFNOR.

This European Standard shall be given the status of a national standard, either by publication of an identical text or by endorsement, at the latest by September 2020, and conflicting national standards shall be withdrawn at the latest by September 2020.

Attention is drawn to the possibility that some of the elements of this document may be the subject of patent rights. CEN shall not be held responsible for identifying any or all such patent rights.

According to the CEN-CENELEC Internal Regulations, the national standards organizations of the following countries are bound to implement this European Standard: Austria, Belgium, Bulgaria, Croatia, Cyprus, Czech Republic, Denmark, Estonia, Finland, France, Germany, Greece, Hungary, Iceland, Ireland, Italy, Latvia, Lithuania, Luxembourg, Malta, Netherlands, Norway, Poland, Portugal, Republic of North Macedonia, Romania, Serbia, Slovakia, Slovenia, Spain, Sweden, Switzerland, Turkey and the United Kingdom.

Endorsement notice

The text of ISO 18526-2:2020 has been approved by CEN as EN ISO 18526-2:2020 without any modification.

Documents
Document Sharing Hub
Full document details: BS EN ISO 18526-2:2020

Contents

Page

Foreword ... **vii**
Introduction ... **viii**
1 Scope ... **1**
2 Normative references ... **1**
3 Terms and definitions ... **1**
4 Preparatory information ... **1**
5 General test requirements ... **2**
6 Test methods for measuring transmittance — General ... **2**
6.1 Uncertainty of measurement ... 2
6.2 Reporting compliance ... 3
6.3 Applicability ... 3
6.4 Position and direction of measurement ... 3
6.5 Wavelength intervals ... 3
6.6 Test report ... 3
7 Luminous transmittance ... **3**
7.1 Calculations of luminous transmittance from spectral values ... 3
7.2 Test report ... 3
7.3 Broadband method of measurement of luminous transmittance ... 4
7.3.1 Apparatus ... 4
7.3.2 Calibration ... 4
7.3.3 Procedure ... 4
7.3.4 Test reports for luminous transmittance values ... 4
7.4 Measurement of uniformity of luminous transmittance ... 4
7.4.1 Unmounted filter covering one eye ... 4
7.4.2 Filter covering both eyes ... 6
7.5 Transmittance matching at right and left reference points ... 9
7.5.1 Test method ... 9
7.5.2 Calculations ... 10
7.5.3 Test report ... 10
8 Ultraviolet transmittance ... **10**
8.1 General ... 10
8.2 Spectral transmittance and mean spectral transmittance ... 10
8.3 Solar UV transmittance ... 10
8.4 Solar UV-A transmittance ... 10
8.5 Solar UV-B transmittance ... 10
8.6 Mean UV-A transmittance ... 10
8.7 Mean UV-B transmittance ... 11
8.8 Mean 380 nm to 400 nm transmittance ... 11
8.9 Test report ... 11
9 Blue-light transmittance ... **11**
9.1 Solar blue-light transmittance ... 11
9.1.1 Calculation of solar blue-light transmittance from spectral values ... 11
9.1.2 Broadband method of measurement of solar blue-light transmittance ... 11
9.2 Blue-light transmittance from artificial sources ... 11
9.2.1 Calculation of blue-light transmittance from artificial sources from spectral values ... 11
9.2.2 Broadband method of measurement of blue-light transmittance from artificial sources ... 12
9.2.3 Test report ... 12
10 IR transmittance ... **12**

AVA Documents
Document Sharing Hub

© ISO 2020 – All rights reserved

Full document details: BS EN ISO 18526-2:2020

10.1 Near IR transmittance ... 12
10.1.1 Calculation ... 12
10.2 IR-A transmittance ... 12
10.2.1 Calculation ... 12
10.3 IR-B transmittance ... 12
10.3.1 Calculation ... 12
10.4 Solar IR transmittance ... 12
10.4.1 Calculation ... 12
10.5 Test report ... 12

11 Relative visual attenuation coefficient for traffic signal light detection, Q_{signal} ... 13
11.1 Calculation ... 13
11.2 Test report ... 13

12 Spectral reflectance ... 13
12.1 Uncertainty of measurement ... 13
12.2 Position and direction of measurement ... 13
12.2.1 Specular spectral reflectance ... 13
12.2.2 Total spectral reflectance (specular included) ... 13
12.2.3 Total spectral reflectance (specular excluded) ... 14
12.2.4 0°/45° and 45°/0° geometry ... 14
12.3 Wavelength intervals ... 14
12.4 Test report ... 14

13 Luminous reflectance ... 14
13.1 Calculations ... 14
13.2 Test report ... 14
13.3 Luminous reflectance of mesh ... 14

14 Scattered light ... 15
14.1 Wide angle scatter ... 15
14.1.1 Principle ... 15
14.1.2 Apparatus ... 15
14.1.3 Test sample ... 16
14.1.4 Test procedure ... 16
14.1.5 Calculation ... 16
14.1.6 Test report ... 17
14.2 Narrow angle scatter ... 17
14.2.1 Principle ... 17
14.2.2 Test methods ... 18
14.2.3 Test report ... 23

15 Polarization ... 23
15.1 Plane of transmission ... 23
15.1.1 Apparatus ... 23
15.1.2 Test procedure ... 23
15.1.3 Test report ... 24
15.2 Polarizing efficiency ... 24
15.2.1 Principle ... 24
15.2.2 Test procedure for the spectrophotometric method ... 25
15.2.3 Test report ... 25
15.2.4 Test procedure for the broadband method ... 25
15.2.5 Test report ... 26

16 Photochromic lenses ... 26
16.1 Light source(s) to approximate the spectral distribution of solar radiation for air mass 2 for testing ... 26
16.1.1 Radiation source using one lamp ... 26
16.1.2 Radiation source using two lamps ... 27
16.2 Conditioning for luminous transmittance in the faded state ... 27
16.3 Measurement ... 28

© ISO 2020 – All rights reserved
Documents
Document Sharing Hub
Full document details: BS EN ISO 18526-2:2020

16.3.1 Principle ... 28
16.3.2 Faded state ... 28
16.3.3 Darkened states ... 28

17 Automatic welding filters ... 29
17.1 General ... 29
17.2 Luminous transmittance in the light state ... 29
17.2.1 Measurement ... 29
17.2.2 Test report ... 30
17.3 Luminous transmittance in the dark state ... 30
17.3.1 Measurement ... 30
17.3.2 Test report ... 30
17.4 Shade number of welding filters with automatic shade number setting ... 30
17.4.1 Principle ... 30
17.4.2 Apparatus ... 31
17.4.3 Test procedure ... 31
17.4.4 Test report ... 31
17.5 Luminous transmittance variation over time ... 31
17.5.1 Principle ... 31
17.5.2 Apparatus ... 32
17.5.3 Test procedure ... 32
17.5.4 Test report ... 32
17.6 Blue-light transmittance for artificial sources ... 32
17.6.1 Measurement ... 32
17.6.2 Test report ... 32
17.7 Uniformity of luminous transmittance for flat filters ... 32
17.7.1 Filter covering both eyes ... 32
17.8 Angular dependence of luminous transmittance for flat filters ... 33
17.8.1 Principle ... 33
17.8.2 Apparatus ... 33
17.8.3 Test procedure ... 34
17.8.4 Test report ... 37
17.9 Angular dependence and uniformity of luminous transmittance for curved filters ... 37
17.9.1 Principle ... 37
17.9.2 Apparatus ... 37
17.9.3 Procedure ... 38
17.9.4 Test report ... 39
17.10 Transmittance matching at right and left reference points ... 39
17.10.1 Procedure ... 39
17.10.2 Test report ... 39
17.11 Switching time ... 39
17.11.1 Principle ... 39
17.11.2 Apparatus ... 39
17.11.3 Procedure ... 39
17.11.4 Uncertainty of measurement ... 40
17.11.5 Test report ... 40
17.12 Holding time ... 40
17.12.1 Principle ... 40
17.12.2 Apparatus ... 40
17.12.3 Procedure ... 40
17.12.4 Uncertainty of measurement ... 40
17.12.5 Test report ... 40
17.13 Manual control of dark state ... 40
17.13.1 Procedure ... 40
17.13.2 Test report ... 41
17.14 Optical sensitivity of welding detection ... 41
17.14.1 Principle ... 41
17.14.2 Apparatus ... 41
17.14.3 Measuring equipment ... 42

AVA Documents
Document Sharing Hub

© ISO 2020 – All rights reserved

Full document details: BS EN ISO 18526-2:2020

17.14.4 Trigger light source (L) ... 43
17.14.5 Calibration procedure for the trigger light source (L) ... 44
17.14.6 Higher intensity light source (I) ... 44
17.14.7 Lower intensity light source (F) ... 45
17.14.8 Test procedure ... 46
17.14.9 Test report ... 46

Annex A (normative) **Application of uncertainty of measurement** ... **47**

Annex B (informative) **Sources of uncertainty in spectrophotometry and their estimation and control** ... **50**

Annex C (informative) **Definitions in summation form** ... **58**

Annex D (normative) **Spectral functions for the calculation of transmittance and reflectance values** ... **63**

Annex E (informative) **Generic description of automatic welding filters and guidance on illumination during testing** ... **73**

Bibliography ... **77**

© ISO 2020 – All rights reserved

Documents
Document Sharing Hub
Full document details: BS EN ISO 18526-2:2020

Foreword

ISO (the International Organization for Standardization) is a worldwide federation of national standards bodies (ISO member bodies). The work of preparing International Standards is normally carried out through ISO technical committees. Each member body interested in a subject for which a technical committee has been established has the right to be represented on that committee. International organizations, governmental and non-governmental, in liaison with ISO, also take part in the work. ISO collaborates closely with the International Electrotechnical Commission (IEC) on all matters of electrotechnical standardization.

The procedures used to develop this document and those intended for its further maintenance are described in the ISO/IEC Directives, Part 1. In particular the different approval criteria needed for the different types of ISO documents should be noted. This document was drafted in accordance with the editorial rules of the ISO/IEC Directives, Part 2 (see www.iso.org/directives).

Attention is drawn to the possibility that some of the elements of this document may be the subject of patent rights. ISO shall not be held responsible for identifying any or all such patent rights. Details of any patent rights identified during the development of the document will be in the Introduction and/or on the ISO list of patent declarations received (see www.iso.org/patents).

Any trade name used in this document is information given for the convenience of users and does not constitute an endorsement.

For an explanation of the voluntary nature of standards, the meaning of ISO specific terms and expressions related to conformity assessment, as well as information about ISO's adherence to the World Trade Organization (WTO) principles in the Technical Barriers to Trade (TBT) see www.iso.org/iso/foreword.html.

This document was prepared by Technical Committe ISO/TC 94, *Personal safety — Protective protective equipment*, Subcommittee SC 6, *Eye and face protection*.

This first edition of ISO 18526-2, together with ISO 18526-1, cancels and replaces ISO 4854:1981.

A list of all parts in the ISO 18526 series can be found on the ISO website.

Any feedback or questions on this document should be directed to the user's national standards body. A complete listing of these bodies can be found at www.iso.org/members.html.

© ISO 2020 – All rights reserved

Documents
Document Sharing Hub
Full document details: BS EN ISO 18526-2:2020

Introduction

This family of documents comprised of the ISO 16321 series, the ISO 18526 series and the ISO 18527 series was developed in response to the worldwide stakeholders' demand for minimum requirements and test methods for eye and face protectors traded internationally. ISO 4007 gives the terms and definitions for all the various product types. The test methods are given in the ISO 18526 series, while the requirements for occupational eye and face protectors are given in the ISO 16321 series. Eye protectors for specific sports are mostly dealt with by the ISO 18527 series. A guidance document, ISO 19734, for the selection, use and maintenance of eye and face protectors is under preparation.

© ISO 2020 – All rights reserved
Documents
Document Sharing Hub
Full document details: BS EN ISO 18526-2:2020

Eye and face protection — Test methods —

Part 2:
Physical optical properties

1 Scope

This document specifies the reference test methods for determining the physical optical properties of personal eye and face protectors.

This document does not apply to any eye and face protection products for which the requirements standard(s) specifies other test methods.

Other test methods can be used provided they have been shown to be equivalent and include uncertainties of measurement no greater than those required of the reference method.

2 Normative references

The following documents are referred to in such a way that some or all of their content constitutes requirements of this document. For dated references, only the edition cited applies. For undated references, the latest edition of the referenced document (including any amendments) applies.

ISO 4007, *Personal protective equipment — Eye and face protection — Vocabulary*

ISO/CIE 11664-1, *Colorimetry — Part 1: CIE standard colorimetric observers*

ISO 11664-2, *Colorimetry — Part 2: CIE standard illuminants*

CIE 15:2019, *Colorimetry*

CIE S 017, *International lighting vocabulary*

3 Terms and definitions

For the purposes of this document, the terms and definitions given in ISO 4007 and CIE S 017 apply.

ISO and IEC maintain terminological databases for use in standardization at the following addresses:

— ISO Online browsing platform: available at https://www.iso.org/obp

— IEC Electropedia: available at http://www.electropedia.org/

4 Preparatory information

Before testing, refer to the appropriate product's requirements standard for the information needed to apply the tests in this document, for example:

— the number of test samples[1)];

— preparation of test samples;

1) For the purpose of this document, “test sample” is taken to be the object under test, e.g. “ocular”, “lens”, “filter”, or “complete protector” as specified in the requirements standard.

© ISO 2020 – All rights reserved

AVA Documents Document Sharing Hub
Full document details: BS EN ISO 18526-2:2020

— the selection of test samples (if included in this document);

— any prior conditioning or testing;

— test method (if more than one is included in this document);

— any deviations from the method(s);

— characteristics to be assessed subjectively (if appropriate);

— pass/ fail criteria.

5 General test requirements

Unless otherwise specified, the values stated in this document are expressed as nominal values. Except for temperature limits, values that are not stated as maxima or minima should be subject to a tolerance of ±5 %.

Unless otherwise specified, the ambient temperature for testing should be between 16 °C and 32 °C but if any temperature limits are specified, these should be subject to an accuracy of ±2 °C. Relative humidity should be maintained at (50 ± 20) %.

Unless otherwise specified, the test samples shall be tested at the reference points (for testing) as defined in ISO 4007.

The tests shall be done by trained observers.

For each of the required measurements performed in accordance with this document, a corresponding estimate of the uncertainty of measurement shall be evaluated according to Annex A.

6 Test methods for measuring transmittance — General

6.1 Uncertainty of measurement

Unless otherwise indicated, the measures calculated from spectral transmittance or optical density and the broadband measures of transmittance or optical density shall have uncertainties less than or equal to those given in Table 1.

Table 1 — Uncertainty of measured spectral transmittance and optical density

Spectral transmittance value		Relative uncertainty %	Spectral optical density		Absolute uncertainty
less than %	to %		from	*T* to less than	
100	17,8	±5	0,0	0,7	±0,02
17,8	0,44	±10	0,7	2,4	±0,05
0,44	0,023	±15	2,4	3,6	±0,07
0,023	0,001 2	±20	3,6	4,9	±0,10
0,001 2	0,000 023	±30	4,9	6,6	±0,15
0,000 023	0,000 001 2	±40	6,6	7,9	±0,22
0,000 001 2		±50	7,9		±0,30

The application of uncertainty to compliance is set out in Annex A.

The general methods of evaluating the components of uncertainty are set out in ISO/IEC Guide 98-3. Annex B is a guidance to the sources of uncertainty in spectrophotometry, their evaluation and minimization.

© ISO 2020 – All rights reserved
Documents
Document Sharing Hub
Full document details: BS EN ISO 18526-2:2020

6.2 Reporting compliance

Any compliance statement based on values reported from these test methods shall take into account the uncertainty of measurement as set out in Annex A.

6.3 Applicability

The spectrophotometric method applies to measurement of transmittance regardless of the test sample tested, e.g. filters and frames. Assessment of the uncertainty of measurement shall, if necessary, include the consequences of non-parallel surfaced test samples. Annex C gives the various formulae for calculating UV, luminous and IR transmittances from spectral values in summation form; otherwise, these are the same formulae as in ISO 4007.

6.4 Position and direction of measurement

The location and direction of measurement of transmittance shall be as specified in the relevant product requirement standard. If the measurements are not made normal to the surface of the test sample, then particular attention should be paid to the effects of beam displacement, see Annex B. If the direction of measurement is not specified, then it shall be measured normal to the surface of the test sample at the geometrical centre.

Unless otherwise stated, transmittance is measured as direct transmittance (diffuse component excluded).

The test beam shall be incident normally on the surface and any divergence or convergence of the beam shall not result in an uncertainty of measurement exceeding those in Table 1.

6.5 Wavelength intervals

Spectral measurements and calculations shall be carried out at not more than 5 nm intervals ($\Delta\lambda$ = 5 nm) in the ultraviolet and visible region (180 nm to 780 nm) and not more than 10 nm intervals in the infrared region (780 nm to 3 000 nm). The necessary data for calculations at these intervals are provided in Annex D. If smaller intervals are used then linear interpolation of the Annex D data is appropriate.

6.6 Test report

The spectral transmittances and the associated uncertainties of measurement shall be reported as required in the standard referencing this test method.

7 Luminous transmittance

7.1 Calculations of luminous transmittance from spectral values

Luminous transmittance is calculated as a percentage from the spectral transmittances determined hereafter and with reference to a standard observer and a source or illuminant. For the purposes of this document, all calculations use the CIE 2° standard observer (ISO/CIE 11664-1) and CIE standard illuminant A and/or CIE standard illuminant D65 (ISO 11664-2) and/or a Planckian radiator of distribution temperature 1 900 K. See ISO 4007:2018, 3.10.1.32 and, in this document, C.3.1 and Tables D.2 to D.4.

7.2 Test report

The luminous transmittance(s), the applicable illuminant(s) and/or source(s) and the associated uncertainty of measurement shall be reported as required in the standard(s) referencing these methods.

© ISO 2020 – All rights reserved

Documents
Document Sharing Hub
Full document details: BS EN ISO 18526-2:2020

7.3 Broadband method of measurement of luminous transmittance

7.3.1 Apparatus

The luminous transmittance is measured by using a test apparatus consisting of a light source and a photodetector. The light source shall be a broadband collimated light source with approximately the spectral distribution of a CIE standard illuminant in accordance with ISO 11664-2 in the spectral range 380 nm to 780 nm or other source as specified in the standard referencing this test method. The photodetector shall have a spectral response corresponding to CIE 2° standard observer in accordance with ISO/CIE 11664-1. The photodetector shall be mounted normal to the beam of illumination.

7.3.2 Calibration

The broadband method shall be calibrated by comparison with filters for which the luminous transmittances are known with uncertainties of measurement sufficiently small as to enable the applicable requirement of Table 1 to be met by the test method. The maximum difference in shade number between the test sample and the nearest reference filter shall ensure compliance with Table 1.

7.3.3 Procedure

The luminous transmittance is measured as the ratio of the luminous flux transmitted by the test sample to the incident luminous flux measured with no test sample in the light beam.

If the direction of measurement is not specified, measurement shall be with incident radiation normal to the surface of the test sample. If the position of measurement is not specified, the boxed or geometric centre of the test sample shall be used.

7.3.4 Test reports for luminous transmittance values

The luminous transmittance(s), the applicable source (CIE standard illuminant A or D65 or other source) and the associated uncertainty of measurement shall be reported as required in the standard referencing this test method.

7.4 Measurement of uniformity of luminous transmittance

7.4.1 Unmounted filter covering one eye

7.4.1.1 Test method

Locate the reference point defined in ISO 4007:2018, 3.8.8. Determine a circular area centred on the reference point with diameter d calculated as follows, (see Figure 1):

— for test samples equal to or greater than 50 mm in the vertical dimension at the reference point, d = (40,0 ± 0,5) mm;

— for test samples less than 50 mm in the vertical dimension at the reference point, $d = [(h - 10) \pm 0{,}5]$ mm where h is the vertical depth of test sample.

If a 5 mm wide portion around the edge of the test sample intrudes into this circular area, then this intrusion shall be excluded from testing.

Scan this circular area with beam of light of 5 mm nominal diameter incident normally on the surface of the test sample. Use either white light and a photodetector whose spectral responsivity approximates that of the CIE 2° standard colorimetric observer (ISO/CIE 11664-1) or use a narrow spectral band of light with a maximum spectral energy at (555 ± 25) nm (the spectral sensitivity of the photodetector does not influence the relative measurement). Compensate for any effects of displacement of the light beam by any prismatic effect of the test sample (see B.3.4.1). If necessary to demonstrate compliance, the effects of variation of thickness of the test sample shall be compensated for as in 7.4.1.4.

© ISO 2020 – All rights reserved
AVA Documents Document Sharing Hub
Full document details: BS EN ISO 18526-2:2020

For test samples with bands or gradients of different luminous transmittance, the requirement for variations in luminous transmittance applies in this circular area but perpendicular to the gradient (see Figure 1). Two example scans perpendicular to the gradient are shown in Figure 1.

Position the test sample and the light beam so that the incident light falls normally on the surface of the test sample at the reference point and parallel to that direction when testing at other locations on the test sample.

Measure and record the maximum value of luminous transmittance $\tau_{v,max}$ and the minimum value of luminous transmittance $\tau_{v,min}$.

Dimensions in millimetres

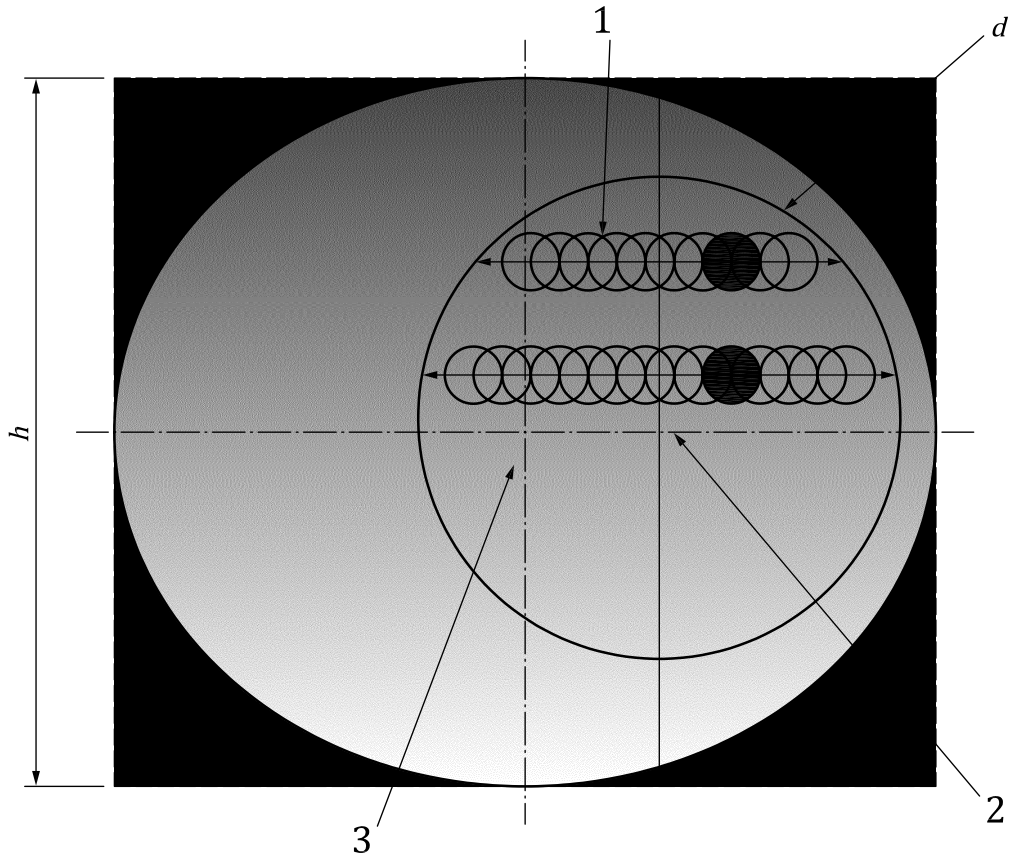

Key

1 light beam, nominal 5 mm diameter

2 reference point

3 nominated interpupillary distance/2

h vertical depth of the test sample

d diameter of the area under test as specified in 7.4.1.1

Figure 1 — Luminous transmittance uniformity measurement for test samples with bands or gradients of different luminous transmittance

7.4.1.2 Calculations

Calculate the value of ΔF, as a percentage, from the following Formula (1);

$$\Delta F = 100 \times \frac{\left(\tau_{v,max} - \tau_{v,min}\right)}{\tau_{v,max}} \quad (1)$$

© ISO 2020 – All rights reserved

Documents
Document Sharing Hub
Full document details: BS EN ISO 18526-2:2020

where

$\tau_{v,max}$ is the maximum value of luminous transmittance;

$\tau_{v,min}$ is the minimum value of luminous transmittance.

7.4.1.3 Test report

The value of ΔF as a percentage, the applicable illuminant(s) or source(s) and the associated uncertainty of measurement shall be reported as required in the standard referencing this test method.

7.4.1.4 Method to correct transmittance for variations in thickness of the test sample

The following relation holds between the transmittance and the thickness, t, if multiple reflections within the test sample are neglected:

$$\tau = (1-\rho_1)\cdot(1-\rho_2)\cdot e^{-k\cdot t} \tag{2}$$

where

ρ_1 is the reflectance at the front surface;

ρ_2 is the reflectance of the back surface;

t is the thickness;

k is the absorption coefficient.

The absorption coefficient k can be calculated from the transmittance, τ, for the reference thickness, t, as follows:

$$k = \frac{-\log_e\left[\dfrac{\tau}{(1-\rho_1)\cdot(1-\rho_2)}\right]}{t} \tag{3}$$

The expected transmittance for a different thickness can then be calculated using Formula (2). Where the refractive index, n, of the medium is known and there is no surface treatment, the reflectance at the interface between the medium and air is given by the following Formula (4):

$$\rho = \left(\frac{n-1}{n+1}\right)^2 \tag{4}$$

7.4.2 Filter covering both eyes

7.4.2.1 Test method

Locate the reference points defined in ISO 4007:2018, 3.8.9 for the nominated interpupillary distance. Determine the two circular areas centred on the reference points with diameter, d, calculated as follows, (see Figure 2):

— for test samples equal to or greater than 50 mm in vertical depth at the reference point, d = (40,0 ± 0,5) mm;

— for test samples less than 50 mm in vertical depth at the reference point, d = [(h − 10) ± 0,5] mm, where h is the vertical depth of test sample.

© ISO 2020 – All rights reserved
Documents
Document Sharing Hub
Full document details: BS EN ISO 18526-2:2020

If a 5 mm wide portion around the edge of the test sample intrudes into this circular area, then this intrusion shall be excluded from testing.

Scan this circular area with beam of light of 5 mm nominal diameter incident normally on the surface of the test sample. Use either white light and a photodetector whose spectral responsivity approximates that of the CIE 2° standard colometric observer (ISO/CIE 11664-1) or use a narrow spectral band of light with a maximum spectral energy at (555 ± 25) nm (the spectral sensitivity of the photodetector does not influence the relative measurement). Compensate for any effects of displacement of the light beam by any prismatic effect of the test sample (see B.3.4.1). If necessary to demonstrate compliance, the effects of variation of thickness of the test sample shall be compensated for as in 7.4.1.4.

For a test sample with bands or gradients of different luminous transmittance, the requirement for variations in luminous transmittance applies in this circular area but perpendicular to the gradient. Two example scans perpendicular to the gradient for each of the reference points are shown in Figure 2.

Measure and record the maximum value of luminous transmittance $\tau_{v,max}$ and the minimum value of luminous transmittance $\tau_{v,min}$.

The test sample and the light beam are positioned so that the incident light falls normally on the surface of the test sample at the reference point and parallel to that direction when testing at other locations on the test sample.

© ISO 2020 – All rights reserved

Documents
Document Sharing Hub
Full document details: BS EN ISO 18526-2:2020

Dimensions in millimetres

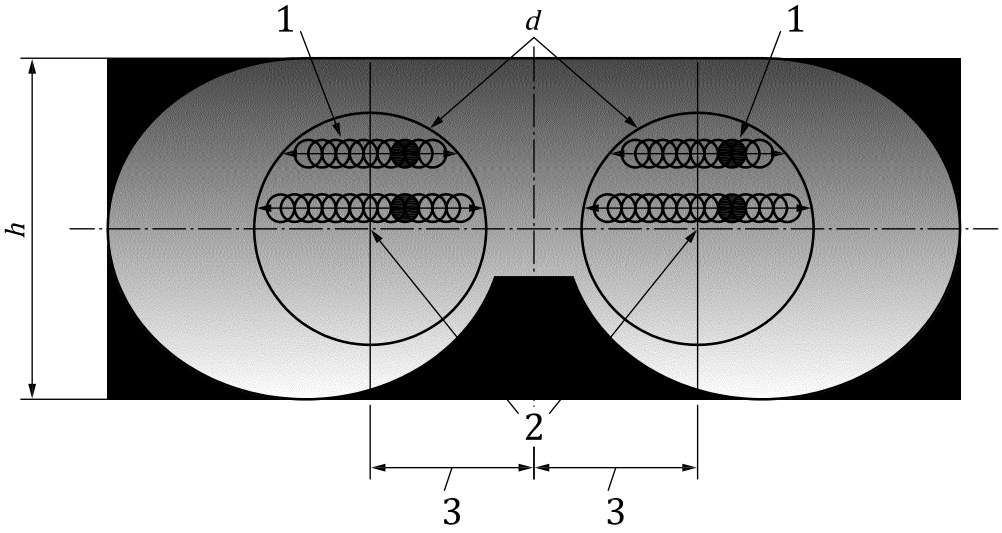

a) One piece lens

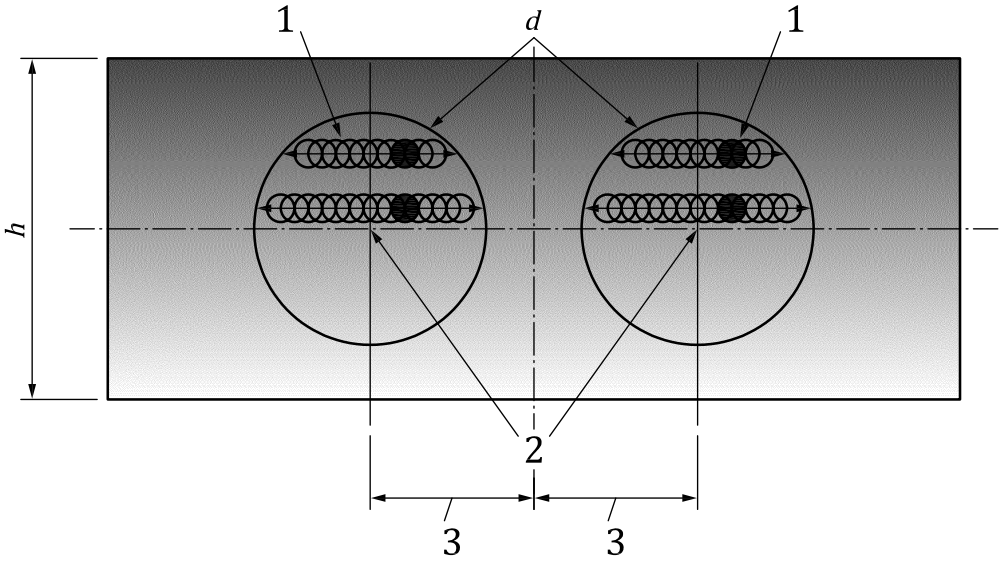

b) Rectangular filter covering both eyes

Key

1 light beam, nominal 5 mm diameter

2 reference point

3 nominated interpupillary distance/2

h vertical depth of the test sample

d diameter of the area under test as specified in 7.4.2.1

Figure 2 — Luminous transmittance uniformity measurement for test samples covering both eyes with bands or gradients of different luminous transmittance

7.4.2.2 Calculations

Calculate the values of ΔF_R and ΔF_L as a percentage, for the right (R) and left (L) scanned areas from the following Formula (5);

$$\Delta F_R = 100 \times \frac{\left(\tau_{v,max,R} - \tau_{v,min,R}\right)}{\tau_{v,max,R}} \qquad \Delta F_L = 100 \times \frac{\left(\tau_{v,max,L} - \tau_{v,min,L}\right)}{\tau_{v,max,L}} \tag{5}$$

where

© ISO 2020 – All rights reserved

Documents
Document Sharing Hub

Full document details: BS EN ISO 18526-2:2020

$\tau_{v,max}$ is the maximum value of luminous transmittance for the applicable lens;

$\tau_{v,min}$ is the minimum value of luminous transmittance for the applicable lens.

7.4.2.3 Test report

The values of ΔF_R and ΔF_L for the right and left scanned areas as percentages, the applicable illuminant(s) or source(s) and the associated uncertainty of measurement shall be reported as required in the standard referencing this test method.

7.5 Transmittance matching at right and left reference points

7.5.1 Test method

For mounted lenses, locate the reference points as defined in ISO 4007:2018, 3.8.7 and measure along the lines of sight in the as-worn position. Measurement may be made in either direction.

For unmounted pairs of lenses, locate the reference points as defined in ISO 4007:2018, 3.8.8. In the absence of specific instructions from the manufacturer, test at the boxed centres and normal to the surface.

For unmounted lenses covering both eyes, locate the reference points as defined in ISO 4007:2018, 3.8.9. In the absence of specific instructions from the manufacturer, measure at two points horizontally symmetrical either side of the midline of the filter separated by the intended interpupillary distance and in a direction parallel to the normal to the filter at the centre. See Figure 3.

Measure and record the value of luminous transmittance, $\tau_{v,L}$, at the left reference point and the value of luminous transmittance, $\tau_{v,R}$, at the right reference point.

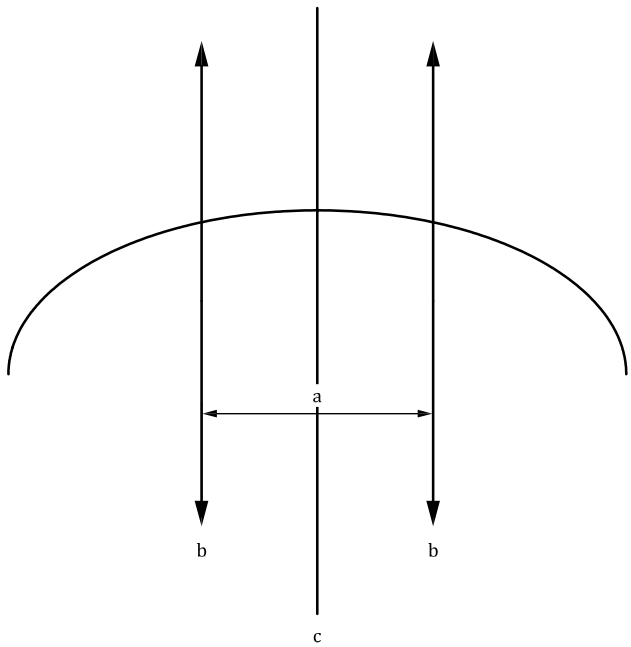

Key

a Interpupillary distance (PD).

b Direction of measurement.

c Normal to centre of filter.

Figure 3 — Luminous transmittance matching measurement for unmounted test samples covering both eyes

© ISO 2020 – All rights reserved

Documents
Document Sharing Hub
Full document details: BS EN ISO 18526-2:2020

7.5.2 Calculations

Divide the absolute difference between the values of the luminous transmittance at the two reference points $\tau_{v,L}$ and $\tau_{v,R}$ by the higher value of the two luminous transmittances and express this ratio ΔP as a percentage as given in Formula (6):

$$\Delta P = 100 \times \frac{\left|\tau_{v,R} - \tau_{v,L}\right|}{\max\left(\tau_{v,R}, \tau_{v,L}\right)} \tag{6}$$

where

$\tau_{v,L}$ is the value of luminous transmittance at the left reference point of the test sample;

$\tau_{v,R}$ is the value of luminous transmittance at the right reference point of the test sample.

EXAMPLE If a test sample (covering both eyes) transmits 40,0 % for the left eye and 42,0 % for the right eye (see Figure 3), then the result is 100 × (2,0/42,0) = 4,8 %.

7.5.3 Test report

The value of ΔP as a percentage, the applicable illuminant(s) or source(s) and the associated uncertainty of measurement shall be reported as required in the standard referencing this test method.

8 Ultraviolet transmittance

8.1 General

Ultraviolet transmittance shall be calculated from the spectral transmittances measured in Clause 7. There is no broadband method specified.

8.2 Spectral transmittance and mean spectral transmittance

8.3 Solar UV transmittance

See ISO 4007:2018, 3.10.1.28. See also C.3.2.1.

The values of $E_s(\lambda)$, $S(\lambda)$ and $W(\lambda)$ are given in Table D.1.

8.4 Solar UV-A transmittance

See ISO 4007:2018, 3.10.1.29. See also C.3.2.2.

The values of $E_s(\lambda)$, $S(\lambda)$ and $W(\lambda)$ are given in Table D.1.

8.5 Solar UV-B transmittance

See ISO 4007:2018, 3.10.1.30. See also C.3.2.3.

The values of $E_s(\lambda)$, $S(\lambda)$ and $W(\lambda)$ are given in Table D.1.

8.6 Mean UV-A transmittance

See ISO 4007:2018, 3.10.1.26. See also C.3.2.4.

© ISO 2020 – All rights reserved
Documents
Document Sharing Hub
Full document details: BS EN ISO 18526-2:2020

8.7 Mean UV-B transmittance

See ISO 4007:2018, 3.10.1.27. See also C.3.2.5.

8.8 Mean 380 nm to 400 nm transmittance

See ISO 4007:2018, 3.10.1.31. See also C.3.2.6.

8.9 Test report

The values of spectral, mean unweighted and weighted transmittances and the associated uncertainties of measurement shall be reported as required in the standard referencing this test method.

9 Blue-light transmittance

9.1 Solar blue-light transmittance

9.1.1 Calculation of solar blue-light transmittance from spectral values

See ISO 4007:2018, 3.10.1.35. See also C.3.3.1.

The values of $E_s(\lambda)$ and $B(\lambda)$ are given in Table D.1.

9.1.2 Broadband method of measurement of solar blue-light transmittance

9.1.2.1 Apparatus

9.1.2.1.1 Light source, with a broadband high intensity collimated light source with a spectral distribution in the wavelength range from 380 nm to 500 nm, i.e. approximately that of the solar spectral irradiance in Table D.1.

9.1.2.1.2 Photodetector, with a spectral response approximately corresponding to the blue-light hazard weighting function $B(\lambda)$ in the wavelength range from 380 nm to 500 nm. The photodetector shall be mounted normal to the beam of illumination.

The values of $B(\lambda)$ are given in Table D.1.

9.1.2.2 Test procedure

The solar blue-light transmittance is measured as the ratio of the luminous flux transmitted by the test sample to the incident light measured with no test sample in the light path.

9.1.2.3 Test report

The values of solar blue-light transmittance and the associated uncertainty of measurement shall be reported as required in the standard referencing this test method.

9.2 Blue-light transmittance from artificial sources

9.2.1 Calculation of blue-light transmittance from artificial sources from spectral values

See ISO 4007:2018, 3.10.1.36. See also C.3.3.2.

The values of $B(\lambda)$ are given in Table D.1.

© ISO 2020 – All rights reserved

Documents
Document Sharing Hub
Full document details: BS EN ISO 18526-2:2020

9.2.2 Broadband method of measurement of blue-light transmittance from artificial sources

9.2.2.1 Apparatus

9.2.2.1.1 Light source, with a broadband high intensity collimated light source with an approximately flat spectral distribution in the wavelength range from 380 nm to 500 nm.

9.2.2.1.2 Photodetector, with a spectral response approximately corresponding to the blue-light hazard weighting function $B(\lambda)$ in the wavelength range from 380 nm to 500 nm as defined in ISO 4007:2018, Table A.1. The photodetector shall be mounted normal to the beam of illumination.

9.2.2.2 Procedure

The blue-light transmittance from artificial sources is measured as the ratio of the light transmitted by the test sample to the incident light measured with no test sample in the light ray.

9.2.3 Test report

The values of each blue-light transmittance from artificial sources and the associated uncertainty of measurement shall be reported as required in the standard referencing this test method.

10 IR transmittance

10.1 Near IR transmittance

10.1.1 Calculation

See ISO 4007:2018, 3.10.1.39. See also C.3.4.1.

10.2 IR-A transmittance

10.2.1 Calculation

See ISO 4007:2018, 3.10.1.40. See also C.3.4.2.

10.3 IR-B transmittance

10.3.1 Calculation

See ISO 4007:2018, 3.10.1.41. See also C.3.4.3.

10.4 Solar IR transmittance

10.4.1 Calculation

See ISO 4007:2018, 3.10.1.42. See also C.3.4.4.

The values of $E_s(\lambda)$ are given in Table D.4.

10.5 Test report

The values of each IR transmittance measure and the associated uncertainty of measurement shall be reported as required in the standard referencing the this test method.

© ISO 2020 – All rights reserved
Documents
Document Sharing Hub
Full document details: BS EN ISO 18526-2:2020

11 Relative visual attenuation coefficient for traffic signal light detection, Q_{signal}

11.1 Calculation

See ISO 4007:2018, 3.10.1.34. See also C.3.5.

The values of $S_{D65}(\lambda)\cdot V(\lambda)$ and $E_{signal}\cdot V(\lambda)$ for traffic signals with quartz halogen tungsten filament lamps and for traffic signals with LED signals are given in Table D.5. The Q_{signal} values are currently calculated using the E_{signal} values for traffic signals with quartz halogen tungsten filament lamps.

11.2 Test report

Report the values of Q_{red}, Q_{yellow}, Q_{green} and Q_{blue} and the associated uncertainties of measurement in the standard referencing this test method.

12 Spectral reflectance

12.1 Uncertainty of measurement

Unless otherwise indicated, test methods used in the measurement of spectral reflectance, the measures calculated from spectral reflectance and the broadband measures of reflectance shall have relative uncertainties less than or equal to those given in Table 2.

Table 2 — Relative uncertainty of measured spectral reflectance

Spectral reflectance value		Uncertainty %
Less than %	To %	
100	17,8	±5 % relative
17,8		±1 % absolute

12.2 Position and direction of measurement

Specular or regular reflection is a mirror-like reflection obeying the laws of geometrical optics (see also CIE S 017:2011, 17-1240 specular, 17-1241 specular angle, 17-1242 specular reflection and 17-1076 regular reflectance). Diffuse reflectance is the light reflected other than regularly (see also CIE S 017:2011, 17-304 diffuse reflectance). There are several measures of reflectance that deal with these two factors in different ways. The standard requiring the test specifies the geometry. The spectral values are then used to calculate weighted and unweighted values in the same way regardless of the geometry used.

12.2.1 Specular spectral reflectance

Measures of specular reflectance alone are made with the light source and the photodetector subtending the same angle to each side of the normal to the test sample. The photodetector is of sufficient size to collect the specularly reflected radiation. Unless otherwise stated, the angles of incidence and reflection shall be less than or equal to 17°.

Specular reflectance may also be measured by subtracting the total reflectance (specular excluded) (see 12.2.3) from the total reflectance (specular included) (see 12.2.2).

12.2.2 Total spectral reflectance (specular included)

The geometry of measurements shall comply with CIE 15:2019, 5.2.1 or 5.2.3 and notes to 5.2.

© ISO 2020 – All rights reserved

Documents
Document Sharing Hub
Full document details: BS EN ISO 18526-2:2020

12.2.3 Total spectral reflectance (specular excluded)

The geometry of measurements shall comply with CIE 15:2019, 5.2.2 or 5.2.4 and notes to 5.2.

12.2.4 0°/45° and 45°/0° geometry

The test sample is illuminated at an angle of 45° and measured at an angle of 0° or vice versa. The geometry of measurements shall comply with CIE 15:2019, 5.2.7, 5.8, 5.9 or 5.2.10 and notes to 5.2.

12.3 Wavelength intervals

Spectral measurements and calculations shall be carried out at intervals no greater than 5 nm ($\Delta\lambda$ = 5 nm) in the ultraviolet and visible region (180 nm to 780 nm) nm and at intervals no greater than 10 nm ($\Delta\lambda$ = 10 nm) in the infrared region (780 nm to 3 000 nm). The necessary weighting data at these intervals are also provided in 5 nm and 10 nm intervals in Annex D.

12.4 Test report

The spectral reflectances and the associated uncertainty of measurement shall be reported as required in the standard referencing this test method. The report shall include the measurement geometry.

13 Luminous reflectance

13.1 Calculations

The calculation of ρ_v as a percentage is obtained by the ratio of the luminous flux reflected by the test sample Φ_R to the incident luminous flux Φ_I and with reference to a standard observer and a source or standard illuminant. For the purposes of this document, all calculations use the CIE 2° standard colometric observer (ISO/CIE 11664-1). Depending on the application, CIE standard illuminant A and/or CIE standard illuminant D65 (ISO 11664-2) and/or a Planckian radiator of 1 900 K according to ISO 4007:2018, 3.10.1.43 (see also C.3.6.1) may be used or the calculation may assume an equal-energy source.

The values of $S_A(\lambda) \cdot V(\lambda)$, $S_{D65}(\lambda) \cdot V(\lambda)$ and $E_{1\,900\,K}(\lambda) \cdot V(\lambda)$ are given in Annex D, Tables D.2 to D.4.

13.2 Test report

The values of luminous reflectance, the applicable source(s) or illuminant(s), the geometry of the measurement and the associated uncertainties of measurement shall be reported as required in the standard referencing this test method. The report shall include the measurement geometry.

13.3 Luminous reflectance of mesh

The appropriate measurement geometry is the total spectral reflectance (specular included), see 12.2.2. The requirement of 12.3 also applies.

The spectral transmittances $\tau(\lambda)$ measured according to Clause 7 to calculate the luminous transmittance are required in the calculation.

The method requires the use of a light trap or black surface or light trap of known spectral reflectance behind the mesh under test.

Measure the spectral reflectance (380 nm to 780 nm) of the black surface or light trap $\rho_{\text{reference black}}(\lambda)$.

Under the same conditions, measure the spectral reflectance (380 nm to to 780 nm) of the back surface of the mesh backed by the black surface or light trap $\rho'(\lambda)$.

© ISO 2020 – All rights reserved
Documents
Document Sharing Hub
Full document details: BS EN ISO 18526-2:2020

Calculate the corrected spectral reflectance, where:

$$\rho(\lambda)=\rho'(\lambda)-\rho_{\text{reference black}}(\lambda)\cdot\tau(\lambda)^2 \quad (7)$$

Using the $\rho(\lambda)$ values, calculate the luminous reflectance $\rho_{v,A}$ according to ISO 4007:2018, 3.10.1.43. See also C.3.6.1.

Where the mesh can be shown to have a spectral reflectance that is independent of wavelength, then the method can be carried out with a single spectral reflectance value and spectral transmittance value at the same wavelength rather than calculating the luminous reflectance.

14 Scattered light

14.1 Wide angle scatter

14.1.1 Principle

A hazemeter or spectrophotometer with integrating sphere is used to measure the amount of light that deviates from an incident beam by being scattered forward when the beam passes through a test sample, compared with the amount scattered by the test instrument and the amount transmitted by the test sample.

14.1.2 Apparatus

14.1.2.1 Incandescent light source, approximating CIE standard illuminant A or CIE standard illuminant D65 (ISO 11664-2) as specified in the standard referencing this method.

14.1.2.2 Hazemeter or spectrophotometer, with integrating sphere, light trap, photodetector (with monochromator in the case of the spectrophotometer) and reflectance standard (see Figure 4) as follows:

a) The integrating sphere shall have:

   1) a total port area not exceeding 4,0 % of the total internal reflecting area of the sphere;

   2) the entrance and exit ports separated by at least 170°;

   3) the exit port subtending 8° at the centre of the entrance port;

   4) the photodetector (90 ± 10)° from the entrance port; and

   5) all internal surfaces (including the reflectance standard for the exit port) covered with a substance of high reflectance for the wavelengths between 380 nm and 780 nm.

   NOTE 1 Barium sulphate paint can be suitable.

b) The light trap shall have a reflectance of less than 0,1 %.

c) The photodetector shall provide proportional measurements of the radiant flux to within 1 % of the incident radiation, across the range of intensities used within the test.

d) These components shall be arranged so that the irradiating beam shall:

   1) have the axis of the beam passing through the centre of the entrance and exits ports;

   2) be unidirectional, with no ray of the beam deviating from the direction of the axis of the beam by greater than 3°;

© ISO 2020 – All rights reserved

Documents
Document Sharing Hub
Full document details: BS EN ISO 18526-2:2020

3) when there is no test sample obstructing the beam, have a circular cross-section at the exit port, while the diameter of the exit port shall exceed the diameter of the irradiating beam so that there is an annular zone around the beam subtending (1,3 ± 0,1)° at the entrance port;

4) when a test sample covers the entrance port, not form an angle greater than 8° between the axis of the beam and the normal to the surface of the test sample, and

5) when there is no test sample obstructing the beam, be completely absorbed by the light trap (if used).

NOTE 2 Although wide angle scatter measurements are made most commonly by the use of a "hazemeter", a spectrophotometer can be used, provided that it meets the geometric and spectral requirements of this clause.

NOTE 3 Some hazemeters can give anomalous results when the luminous transmittance τ_v of the test sample is below about 15 %. Spectrophotometers can make the measurements on substantially darker test samples.

14.1.3 Test sample

The size of the test sample will vary with the size of the entrance port and the surface curvature of the integrating sphere. The test sample shall be large enough to cover the entrance port completely but shall be small enough to be approximately tangential to the wall of the integrating sphere. See Figure 4.

14.1.4 Test procedure

Carry out the test procedure as follows:

a) Measure the incident light (τ_1) without the test sample in position, without the light trap in position and with the reflectance standard in position (some instruments allow adjustment of this value to 1,00 or 100 %, in which case τ_1 = 1,00 or 100 %).

b) Measure the total light transmitted by the test sample (τ_2) with the test sample in position, without the light trap in position and with the reflectance standard in position.

c) Measure the light scattered by the instrument (τ_3) without the test sample in position, with the light trap in position and without the reflectance standard in position.

d) Measure the light scattered by the instrument and test sample (τ_4) with the test sample in position, with the light trap in position and without the reflectance standard in position.

e) Repeat step b) so that four readings are obtained, rotating the test sample between readings by 90°.

f) Repeat step d) so that four readings are obtained at the same positions as in step e).

14.1.5 Calculation

The following shall be calculated:

The mean values of τ_2 and τ_4 ($\bar{\tau}_2$ and $\bar{\tau}_4$).

The total transmittance $$\tau_t = \frac{\bar{\tau}_2}{\tau_1} \quad (8)$$

© ISO 2020 – All rights reserved
Documents
Document Sharing Hub
Full document details: BS EN ISO 18526-2:2020

The diffuse transmittance $\tau_d = \left[\bar{\tau}_4 - \tau_3 \cdot \frac{\bar{\tau}_2}{\tau_1}\right] / \tau_1$ (9)

The wide angle scatter, expressed as a percentage, from the Formula (10):

$$\text{wide angle scatter} = \frac{\tau_d}{\tau_t} \times 100 \quad (10)$$

Some instruments may make the measurements and calculate τ_d.

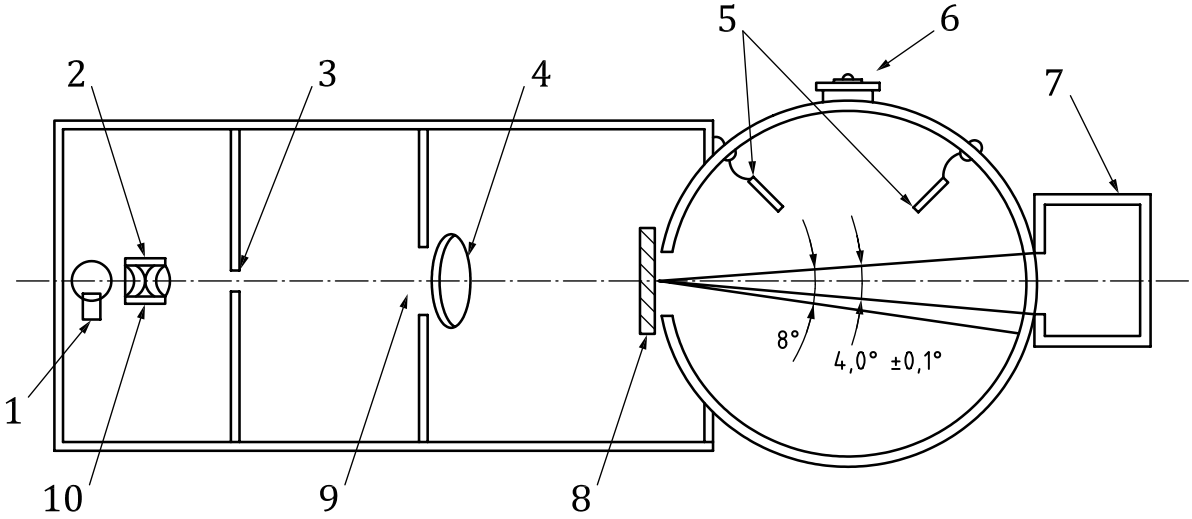

Key

1	light source	5	baffles	9	aperture
2	condenser	6	photocell	10	colour correcting filter (A or D65)
3	entrance window	7	light trap		
4	lens	8	test sample		

Figure 4 — Diagram of typical equipment for the measurement of wide angle scatter

14.1.6 Test report

The values of wide angle scatter (haze), the applicable illuminant(s) and the associated uncertainties of measurement shall be reported as required in the standard referencing this test method.

14.2 Narrow angle scatter

14.2.1 Principle

The luminance (L_s) of an illuminated test sample is a measure of its narrow angle scatter and is proportional to the illuminance (E) on the test sample.

The ratio $l = \frac{L_s}{E}$ is the luminance coefficient, which is expressed in the units: (cd/m^2)/lx.

However, this ratio has to be expressed as the reduced luminance coefficient l^* that is independent of the luminous transmittance τ_v of the test sample, such that:

$$l^* = \frac{L_s}{\tau_v \cdot E} \quad (11)$$

where τ_v is the luminous transmittance, expressed as a number between 0,0 and 1,0.

© ISO 2020 – All rights reserved

AVA Documents Document Sharing Hub
Full document details: BS EN ISO 18526-2:2020