BS EN ISO 18674-4:2020

BSI Standards Publication

Geotechnical investigation and testing – Geotechnical monitoring by field instrumentation

Part 4: Measurement of pore water pressure: Piezometers

Documents
Document Sharing Hub

Full document details: BS EN ISO 18674-4:2020

National foreword

This British Standard is the UK implementation of EN ISO 18674-4:2020. It is identical to ISO 18674-4:2020.

The UK participation in its preparation was entrusted to Technical Committee B/526/3, Site investigation and ground testing.

A list of organizations represented on this committee can be obtained on request to its committee manager.

This publication does not purport to include all the necessary provisions of a contract. Users are responsible for its correct application.

© The British Standards Institution 2020
Published by BSI Standards Limited 2020

ISBN 978 0 539 00335 2

ICS 13.080.20; 93.020

Compliance with a British Standard cannot confer immunity from legal obligations.

This British Standard was published under the authority of the Standards Policy and Strategy Committee on 31 July 2020.

Amendments/corrigenda issued since publication

Date	Text affected

Documents
Document Sharing Hub

Full document details: BS EN ISO 18674-4:2020

EUROPEAN STANDARD

NORME EUROPÉENNE

EUROPÄISCHE NORM

EN ISO 18674-4

July 2020

ICS 13.080.20; 93.020

English Version

Geotechnical investigation and testing - Geotechnical monitoring by field instrumentation - Part 4: Measurement of pore water pressure: Piezometers (ISO 18674-4:2020)

Reconnaissance et essais géotechniques - Surveillance géotechnique par instrumentation in situ - Partie 4: Mesure de la pression interstitiell (ISO 18674-4:2020)

Geotechnische Erkundung und Untersuchung - Geotechnische Messungen - Teil 4: Porenwasserdruckmessungen: Piezometer (ISO 18674-4:2020)

This European Standard was approved by CEN on 23 June 2020.

CEN members are bound to comply with the CEN/CENELEC Internal Regulations which stipulate the conditions for giving this European Standard the status of a national standard without any alteration. Up-to-date lists and bibliographical references concerning such national standards may be obtained on application to the CEN-CENELEC Management Centre or to any CEN member.

This European Standard exists in three official versions (English, French, German). A version in any other language made by translation under the responsibility of a CEN member into its own language and notified to the CEN-CENELEC Management Centre has the same status as the official versions.

CEN members are the national standards bodies of Austria, Belgium, Bulgaria, Croatia, Cyprus, Czech Republic, Denmark, Estonia, Finland, France, Germany, Greece, Hungary, Iceland, Ireland, Italy, Latvia, Lithuania, Luxembourg, Malta, Netherlands, Norway, Poland, Portugal, Republic of North Macedonia, Romania, Serbia, Slovakia, Slovenia, Spain, Sweden, Switzerland, Turkey and United Kingdom.

EUROPEAN COMMITTEE FOR STANDARDIZATION
COMITÉ EUROPÉEN DE NORMALISATION
EUROPÄISCHES KOMITEE FÜR NORMUNG

CEN-CENELEC Management Centre: Rue de la Science 23, B-1040 Brussels

© 2020 CEN All rights of exploitation in any form and by any means reserved worldwide for CEN national Members.

Ref. No. EN ISO 18674-4:2020 E

Documents
Document Sharing Hub

Full document details: BS EN ISO 18674-4:2020

European foreword

This document (EN ISO 18674-4:2020) has been prepared by Technical Committee ISO/TC 182 "Geotechnics" in collaboration with Technical Committee CEN/TC 341 “Geotechnical Investigation and Testing” the secretariat of which is held by BSI.

This European Standard shall be given the status of a national standard, either by publication of an identical text or by endorsement, at the latest by January 2021, and conflicting national standards shall be withdrawn at the latest by January 2021.

Attention is drawn to the possibility that some of the elements of this document may be the subject of patent rights. CEN shall not be held responsible for identifying any or all such patent rights.

According to the CEN-CENELEC Internal Regulations, the national standards organizations of the following countries are bound to implement this European Standard: Austria, Belgium, Bulgaria, Croatia, Cyprus, Czech Republic, Denmark, Estonia, Finland, France, Germany, Greece, Hungary, Iceland, Ireland, Italy, Latvia, Lithuania, Luxembourg, Malta, Netherlands, Norway, Poland, Portugal, Republic of North Macedonia, Romania, Serbia, Slovakia, Slovenia, Spain, Sweden, Switzerland, Turkey and the United Kingdom.

Endorsement notice

The text of ISO 18674-4:2020 has been approved by CEN as EN ISO 18674-4:2020 without any modification.

Documents
Document Sharing Hub

Full document details: BS EN ISO 18674-4:2020

Contents

Page

Foreword ... **iv**

1 Scope ... **1**

2 Normative references ... **1**

3 Terms and definitions ... **1**

4 Symbols and abbreviated terms ... **7**

5 Instruments ... **7**
- 5.1 General ... 7
- 5.2 Open piezometer systems ... 9
  - 5.2.1 General ... 9
  - 5.2.2 Types of open piezometer systems ... 10
- 5.3 Closed piezometer systems ... 13
  - 5.3.1 General ... 13
  - 5.3.2 Types of closed piezometer systems ... 16
- 5.4 Absolute versus relative measurements and atmospheric compensation ... 17
- 5.5 Requirements for filters ... 19
  - 5.5.1 Filters in open piezometer systems ... 19
  - 5.5.2 Filters in closed piezometer systems ... 19
- 5.6 Measuring range and accuracy ... 20

6 Installation and measuring procedure ... **20**
- 6.1 Installation ... 20
  - 6.1.1 General ... 20
  - 6.1.2 Installation of open piezometer systems ... 21
  - 6.1.3 Installation of closed piezometer systems ... 23
  - 6.1.4 Checks before, during and after installation ... 24
  - 6.1.5 Maintenance ... 25
- 6.2 Carrying out the measurement ... 25
  - 6.2.1 Instrumentation check and calibration ... 25
  - 6.2.2 Measurement ... 26

7 Data processing and evaluation ... **26**

8 Reporting ... **26**
- 8.1 Installation report ... 26
- 8.2 Monitoring report ... 26

Annex A (normative) **Measuring and evaluation procedure** ... **27**

Annex B (informative) **Geo-engineering applications** ... **34**

Annex C (informative) **Protection of piezometers at the ground level** ... **36**

Annex D (informative) **Response time for pore water pressure measurements** ... **39**

Annex E (normative) **Fully grouted piezometer installation** ... **42**

Annex F (normative) **Measuring negative pore water pressure (soil suction)** ... **44**

Annex G (informative) **Measuring examples** ... **45**

Bibliography ... **57**

© ISO 2020 – All rights reserved

Documents
Document Sharing Hub

Full document details: BS EN ISO 18674-4:2020

Foreword

ISO (the International Organization for Standardization) is a worldwide federation of national standards bodies (ISO member bodies). The work of preparing International Standards is normally carried out through ISO technical committees. Each member body interested in a subject for which a technical committee has been established has the right to be represented on that committee. International organizations, governmental and non-governmental, in liaison with ISO, also take part in the work. ISO collaborates closely with the International Electrotechnical Commission (IEC) on all matters of electrotechnical standardization.

The procedures used to develop this document and those intended for its further maintenance are described in the ISO/IEC Directives, Part 1. In particular, the different approval criteria needed for the different types of ISO documents should be noted. This document was drafted in accordance with the editorial rules of the ISO/IEC Directives, Part 2 (see www.iso.org/directives).

Attention is drawn to the possibility that some of the elements of this document may be the subject of patent rights. ISO shall not be held responsible for identifying any or all such patent rights. Details of any patent rights identified during the development of the document will be in the Introduction and/or on the ISO list of patent declarations received (see www.iso.org/patents).

Any trade name used in this document is information given for the convenience of users and does not constitute an endorsement.

For an explanation of the voluntary nature of standards, the meaning of ISO specific terms and expressions related to conformity assessment, as well as information about ISO's adherence to the World Trade Organization (WTO) principles in the Technical Barriers to Trade (TBT) see www.iso.org/iso/foreword.html.

This document was prepared by Technical Committee ISO/TC 182, *Geotechnics,* in collaboration with the European Committee for Standardization (CEN) Technical Committee CEN/TC 341, *Geotechnical Investigation and Testing,* in accordance with the Agreement on technical cooperation between ISO and CEN (Vienna Agreement).

A list of all parts in the ISO 18674 series can be found on the ISO website.

Any feedback or questions on this document should be directed to the user's national standards body. A complete listing of these bodies can be found at www.iso.org/members.html.

© ISO 2020 – All rights reserved
Documents
Document Sharing Hub
Full document details: BS EN ISO 18674-4:2020

Geotechnical investigation and testing — Geotechnical monitoring by field instrumentation —

Part 4: Measurement of pore water pressure: Piezometers

IMPORTANT — The electronic file of this document contains colours which are considered to be useful for the correct understanding of the document. Users should therefore consider printing this document using a colour printer.

1 Scope

This document specifies the measurement of pore water pressures and piezometric levels in saturated ground by means of piezometers installed for geotechnical monitoring. General rules of performance monitoring of the ground, of structures interacting with the ground, of geotechnical fills and of geotechnical works are presented in ISO 18674-1.

If applied in conjunction with ISO 18674-5, the procedures described in this document allow the determination of effective stresses acting in the ground.

This document is applicable to:

— monitoring of water pressures acting on and in geotechnical structures (e.g. quay walls, dikes, excavation walls, foundations, dams, tunnels, slopes, embankments, etc.);

— monitoring of consolidation processes of soil and fill (e.g. beneath foundations and in embankments);

— evaluating stability and serviceability of geotechnical structures;

— checking geotechnical designs in connection with the Observational Design procedure.

NOTE This document fulfils the requirements for the performance monitoring of the ground, of structures interacting with the ground and of geotechnical works by the means of piezometers, installed as part of the geotechnical investigation and testing in accordance with References [4] and [5] This document relates to measuring devices, which are installed in the ground. For pore water pressure measurements carried out in connection with cone penetration tests, see ISO 22476-1.

2 Normative references

The following documents are referred to in the text in such a way that some or all of their content constitutes requirements of this document. For dated references, only the edition cited applies. For undated references, the latest edition of the referenced document (including any amendments) applies.

ISO 18674-1:2015, *Geotechnical investigation and testing — Geotechnical monitoring by field instrumentation — Part 1: General rules*

ISO 22475-1, *Geotechnical investigation and testing — Sampling by drilling and excavation methods and groundwater measurements — Part 1: Technical principles for execution*

3 Terms and definitions

For the purposes of this document, the terms and definitions given in ISO 18674-1 and the following apply.

© ISO 2020 – All rights reserved

Documents
Document Sharing Hub
Full document details: BS EN ISO 18674-4:2020

ISO and IEC maintain terminological databases for use in standardization at the following addresses:

— ISO Online browsing platform: available at https://www.iso.org/obp

— IEC Electropedia: available at http://www.electropedia.org/

3.1
piezometer
field instrument system for measuring *pore water pressure* (3.2) or *piezometric level* (3.4) where the *measuring point* (3.15) is confined within the ground or geotechnical fill so that the measurement responds to the fluid pressure around the measuring zone/point and not to fluid pressures at other elevations

Note 1 to entry: The system consists of a sealed *reservoir* (3.1.2) filled with fluid, a *filter* (3.1.3) and a *measuring device* (3.1.7).

Note 2 to entry: The system is either an *open piezometer system* (3.6) or a *closed piezometer system* (3.7).

3.1.1
intake zone
zone confined by *seals* (3.1.6), between which water in the ground can flow to the measuring device, thus defining the *measuring point* (3.15)

Note 1 to entry: See Figure 1.

Note 2 to entry: It is assumed that a hydrostatic *pore water pressure* (3.2) distribution is established along the intake zone.

Note 3 to entry: The constant of proportionality between flow into or out of a *piezometer* (3.1) and the change of pore water pressure is called the intake factor *F*.

3.1.2
reservoir
space between the ground and the *measuring device* (3.1.7), occupied by a fluid, which allows the *pore water pressure* (3.2) to act on the sensing element of the measuring device

Note 1 to entry: The pores within the *filter* (3.1.3) are an integral part of the reservoir.

Note 2 to entry: In *open piezometer systems* (3.6), the water-filled part of the standpipe is part of the reservoir.

3.1.3
filter
permeable section of a *piezometer* (3.1) defining the *intake zone* (3.1.1), which allows water to enter and at the same time restricts soil particles entering the standpipe or *measuring device* (3.1.7)

Note 1 to entry: The filter can be a combination of elements, such as a sand pocket, a perforated pipe, a geotextile sleeve, a filter tip (3.1.4) and grout backfill in specific cases.

3.1.4
filter tip
filter (3.1.3) element which is a common part of a *closed piezometer system* (3.7)

Note 1 to entry: Filter tips are formed of a material with purpose-designed pore diameters, i.e. *HAE filter* (3.1.4.1) or *LAE filter* (3.1.4.2).

3.1.4.1
high air entry filter
HAE filter
filter tip (3.1.4) with comparatively small pores giving a higher resistance to the passage of air than to the passage of water

Note 1 to entry: Commonly, high air entry filter tips have pore diameters of between 1 µm and 3 µm.

© ISO 2020 – All rights reserved
Documents
Document Sharing Hub
Full document details: BS EN ISO 18674-4:2020

Note 2 to entry: HAE filter tips are used when it is intended to keep gas out of the *measuring device* (3.1.7).

Note 3 to entry: In unsaturated soil or when negative *pore water pressures* (3.2) are to be measured (i.e. suction; see Annex F), the pressure of the gaseous phase is always higher than that of the pore water. The required pore diameter of the HAE filter tip depends on the difference between the pore air pressure and the pore water pressure.

3.1.4.2
low air entry filter
LAE filter
filter tip (3.1.4) with comparatively large pores giving a lower resistance to the passage of air readily allowing the passage of both air and water

Note 1 to entry: Commonly, low air entry filter tips have pore diameters of between 20 µm and 50 µm.

3.1.5
filter pack
permeable material, placed around a slotted section of an open *piezometer* (3.1) or around the *filter tip* (3.1.4), allowing water to reach the *measuring device* (3.1.7)

3.1.6
seal
layer in a borehole, made with a material that has a permeability suitable for hydraulical separation of two *aquifers* (3.10)

Note 1 to entry: Seals are generally used to confine an *intake zone* (3.1.1).

3.1.7
measuring device
part of the *piezometer* (3.1) system used to measure the *piezometric level* (3.4) in an *open system* (3.6) or the *pore water pressure* (3.2) in a *closed system* (3.7)

Note 1 to entry: For an *open piezometer system* (3.6), the measuring device is commonly a *water level meter* (3.1.7.1) for manual measurements or a pressure transducer for automatic measurements.

Note 2 to entry: For a *closed piezometer system* (3.7), the measuring device is typically a diaphragm pressure transducer (see 7b in Figure 1 b)). The diaphragm separates a *reservoir* (3.1.2) and an inner chamber in the transducer. The deflection of the diaphragm is a function of the *pore water pressure* (3.2) (see Figure 3).

Note 3 to entry: For closed piezometer systems, the measuring device is often synonymously termed a piezometer in a narrow sense.

3.1.7.1
water level meter
measuring device with a marked length measuring tape and a tip that activates a signal (light, sound) when it comes into contact with water

Note 1 to entry: A water level meter is commonly used for manual measurements in *open systems* (3.6) or during the installation procedure of *piezometers* (3.1).

3.1.7.2
electric piezometer
piezometer (3.1) where the *measuring device* (3.1.7) has a diaphragm and the deflection of the diaphragm due to *pore water pressure* (3.2) is measured by an electric sensor

Note 1 to entry: Electric piezometers are commonly based on strain gauge, piezo-electric, vibrating wire or capacitive sensors. Data acquisition devices exist which accommodate all types of electric piezometers.

Note 2 to entry: See Figure 3.

© ISO 2020 – All rights reserved

Documents
Document Sharing Hub
Full document details: BS EN ISO 18674-4:2020

3.1.7.3
fibre optic piezometer
piezometer (3.1) where the pressure *measuring device* (3.1.7) has a diaphragm and the deflection of the diaphragm is measured by an optical sensor

Note 1 to entry: Fibre optic piezometers do not require electrical connection between read-out unit and sensor.

Note 2 to entry: Fibre optic piezometers require a dedicated read-out unit.

3.1.7.4
pneumatic piezometer
piezometer (3.1) where the pressure *measuring device* (3.1.7) has a valve which is opened pneumatically by a gas pressure, which is applied from the outside via gas-filled tubes and closed by the *pore water pressure* (3.2)

Note 1 to entry: See Figure 4.

3.2
pore water pressure
u
pressure of the water in the voids of the ground or a fill, relative to the atmospheric pressure

Note 1 to entry: The pore water pressure is the difference between the total stress and the effective stress in saturated ground (see References [6] and [7]).

Note 2 to entry: For rocks, the associated term is joint water pressure.

Note 3 to entry: The state of soil or fill where the pores are completely filled with water is referred to as "saturated".

Note 4 to entry: Pore water pressure measurements can yield positive or negative values (see Reference [8] and Annex F). Instruments that directly measure negative pore pressures are sometimes termed 'tensiometers', but are not within the scope of this document (see ISO 11276).

Note 5 to entry: Measurements of the pore water pressure can be affected by changes of the atmospheric pressure (see 5.4.1 and Annex A).

3.3
pressure head
ψ
ratio u/γ_w of the *pore water pressure u* (3.2) and the specific weight of water γ_w, above a point

Note 1 to entry: For an *open piezometer system* (3.6), it is proportional to the elevation difference between the *piezometric level* (3.4) and the level of the *measuring point* (3.15) (see Figure 1).

3.4
piezometric level
z_w
elevation to which water will rise in an *open standpipe piezometer* (3.6.1) and at which the pressure of the water in the ground is equal to that of the ambient atmosphere

Note 1 to entry: The piezometric level z_w is the sum of the geometric elevation z and the *pressure head* ψ (3.3): $z_w = z + u/\gamma_w$.

Note 2 to entry: See Figure 1.

3.5
groundwater table
water table
elevation at which *pore water pressure u* (3.2) is zero

Note 1 to entry: See Figure 1.

© ISO 2020 – All rights reserved
Documents
Document Sharing Hub
Full document details: BS EN ISO 18674-4:2020

Note 2 to entry: An equivalent term is phreatic surface.

Note 3 to entry: The groundwater level is the level of the groundwater table at a geographical coordinate.

3.6
open system
open piezometer system
field instrument system in which the fluid is in direct contact with the atmosphere and the *piezometric level* (3.4) at the *measuring point* (3.15) is measured

3.6.1
open standpipe piezometer
open piezometer system (3.6), consisting of a pipe (installed in the ground) which, at its upper end, is open to the atmosphere and with a perforated section, located in the *intake zone* (3.1.1)

Note 1 to entry: See Figure 1 a).

Note 2 to entry: Typical inner diameters of the pipe are from 19 mm to 60 mm.

3.6.2
Casagrande piezometer
open standpipe piezometer (3.6.1) with one or two comparatively small inner diameter pipes and a porous *filter tip* (3.1.4) at the *measuring point* (3.15)

Note 1 to entry: See 5.2.2.4, Figure 2 and Reference [9].

3.6.3
monitoring well
open standpipe piezometer (3.6.1) with a large inner diameter of the pipe (typically ≥100 mm)

Note 1 to entry: A monitoring well can be used as standpipe *piezometer* (3.1), if the *response time* (3.9) is satisfactory (see Annex D).

Note 2 to entry: A monitoring well is often used for taking samples of the groundwater or for performing pumping tests.

3.6.4
observation well
open pipe within a borehole, where the *intake zone* (3.1.1) is unconfined

Note 1 to entry: Observation wells are often incorrectly termed *open standpipe piezometers* (3.6.1). Observation wells do not classify as *piezometers* (3.1) as they do not have *seals* (3.1.6).

Note 2 to entry: See 5.2.2.3.2.

3.7
closed system
closed piezometer system
measuring system in which the *reservoir* (3.1.2) is not in direct contact with the atmosphere and in which the pressure in the fluid is measured by a pressure *measuring device* (3.1.7)

Note 1 to entry: See Figure 1 b).

Note 2 to entry: Examples for pressure measuring devices, used in closed systems, are electric transducers, fibre optic transducers and pressure valves.

3.7.1
diaphragm piezometer
closed system (3.7) with a *filter tip* (3.1.4), a small *reservoir* (3.1.2) and diaphragm which separates the pore water from the measuring system

Note 1 to entry: The deflection of the diaphragm is measured and the signal is transported through a cable to an accessible location.

© ISO 2020 – All rights reserved

Documents
Document Sharing Hub
Full document details: BS EN ISO 18674-4:2020

Note 2 to entry: Possible diaphragm piezometers are *electric piezometers* (3.1.7.2) or *fibre optic piezometers* (3.1.7.3).

Note 3 to entry: The pressure is measured adjacent to the filter tip.

3.7.2
closed hydraulic twin-tube piezometer
closed system (3.7) with a porous ceramic *filter tip* (3.1.4) located within an *intake zone* (3.1.1) and connected to a remote location via twin fluid filled tubes

Note 1 to entry: The pressure measurement takes place at the remote location and not at the filter tip. The measurements need to be adjusted for elevation differences between the filter tip and the remote location.

3.7.3
probe piezometer
closed system (3.7) where a moveable *measuring device* (3.1.7) is inserted into a pipe which is equipped with one or more measuring ports, each located at an *intake zone* (3.1.1)

3.8
multi-level piezometer
system with several *measuring points* (3.15) permanently installed at different elevations in the ground, where each measuring point has its own *intake zone* (3.1.1)

3.9
hydrodynamic time lag
response time
time span between a change of the *pore water pressure* (3.2) in the ground and the associated change in the measurement

Note 1 to entry: The time lag depends primarily on the type and dimensions of the *piezometer* (3.1) (essentially the size of the *reservoir* (3.1.2)), the permeability of the ground and the installation procedure (see Annex D).

Note 2 to entry: The term “slow response time” of the piezometer is synonymous with a long hydrodynamic time lag.

3.10
aquifer
body of permeable rock or soil mass suitable for containing and transmitting groundwater

3.11
unconfined aquifer
aquifer (3.10) in which the groundwater surface forms the upper boundary

3.12
confined aquifer
aquifer (3.10) which is bounded above and below by *aquicludes* (3.14)

3.13
confining layer
aquitard
a low permeability layer of rock or soil that restricts groundwater flow and seperates *aquifers* (3.10)

3.14
aquiclude
body of soil or rock with extremely low transmissivity, which effectively prevents the flow of water through the ground

3.15
measuring point
point in the ground where the *pore water pressure* (3.2) is referenced to

© ISO 2020 – All rights reserved
Documents
Document Sharing Hub
Full document details: BS EN ISO 18674-4:2020

4 Symbols and abbreviated terms

Symbol	Name	Unit
A	cross-sectional area of the standpipe	m^2
d	borehole diameter / diameter of intake zone	m
D	diameter of a standpipe	m
F	intake factor	—
FS	full scale	—
GWT	groundwater table	—
HAE	high air entry	—
k_s	hydraulic conductivity of soil	m/s
k_g	hydraulic conductivity of grout	m/s
L	length of intake zone	m
LAE	low air entry	—
p	pressure	kPa
q_u	unconfined compressive strength	Pa
RL	reference level	—
t	time	s
u	pore water pressure	kPa
z	geometric height	m
z_{mp}	geometric height of the measuring point	m
z_w	piezometric level	m
γ_w	unit weight of water	kN/m^3
ψ	pressure head	m

5 Instruments

5.1 General

5.1.1 Open piezometer systems and closed piezometer systems should be distinguished from each other (see Table 1 and Figure 1).

Table 1 — Piezometer types

No.	Type	Sub-type	Feature
1	Open piezometer system (see 5.2)	— open standpipe piezometer — monitoring well — Casagrande piezometer	A filter and reservoir, installed in the ground and open to the atmosphere. The measuring device is retrievable. Readings can be manual or automatic. An advantage of open systems is the possibility that automatic measurements can be checked against manual measurements. Open piezometers may not have a suitable response time in low permeability soils.

© ISO 2020 – All rights reserved

Documents
Document Sharing Hub
Full document details: BS EN ISO 18674-4:2020

Table 1 *(continued)*

No.	Type	Sub-type	Feature
2	Closed piezometer system (see 5.3)	— electric, fibre optic or probe piezometer — pneumatic piezometer — twin-tube piezometer	A filter, a reservoir and a pressure transducer are installed in the ground and are closed from the atmosphere. Retrievable pressure transducers are possible using special systems. Closed systems commonly have a shorter time lag than open systems.

5.1.2 The choice between open or closed systems should be made according to the monitoring plan (see ISO 18674-1:2015, 4.3) and in consideration of the loading conditions and the hydrodynamic time lag of the system.

NOTE 1 The choice between open or closed system is crucial and can be a decisive factor on success or failure of the measurement. For example, in undrained conditions, an open system will not correctly follow the true changes of pore water pressure (see Annex D).

NOTE 2 Climatic conditions play also an important role when choosing between an open and a closed system. For example, when there is a risk of freezing conditions, a closed system is preferred.

5.1.3 The intake zone of the filter should be limited to an adequately short vertical section of the aquifer.

NOTE Pore water pressures can vary with depth or in stratified aquifers or when vertical groundwater flow is present.

5.1.4 All components and equipment intended for installation in the ground shall be sufficiently resistant to mechanical loading and chemical attack by constituents in the groundwater. Any reactions between the materials used and the ground, in particular consequences of diverse electrochemical potential e.g. galvanic effects, shall be prevented.

NOTE Differences in electrochemical potential can cause modified pore water pressures. This effect emanates from gases generated by electric currents created by using different metals or alloys in the piezometer tip and/or filter material.

© ISO 2020 – All rights reserved
Documents
Document Sharing Hub
Full document details: BS EN ISO 18674-4:2020

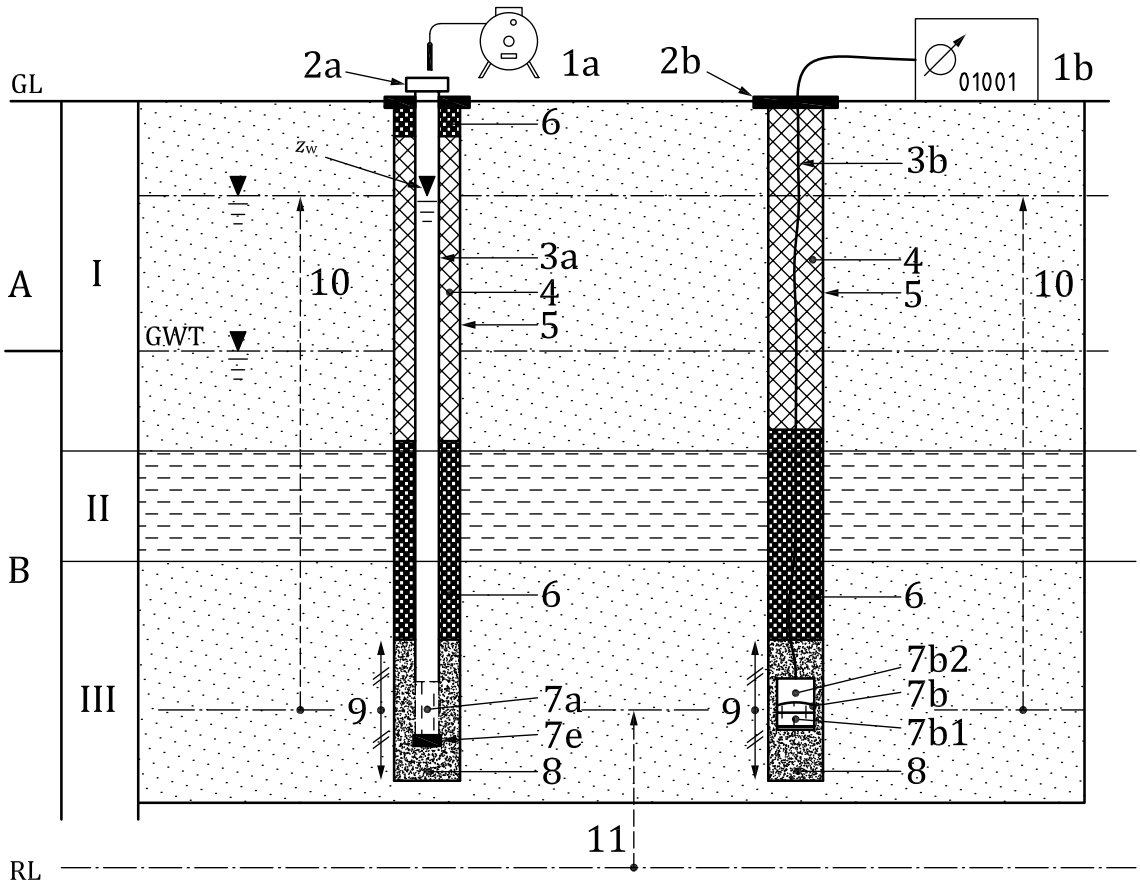

a) Open system **b) Closed system**

Key

GL	Ground Level	A	zone above GWT	B	zone below GWT
I	unconfined aquifer	II	aquiclude or aquitard	III	confined aquifer
z_w	piezometric level in III	GWT	groundwater table in I	RL	reference level (e. g. sea level)
1a	water level meter	1b	readout unit with barometer	2a	vented top cap with base plate
2b	base plate	3a	standpipe	3b	signal cable
4	backfill	5	borehole wall	6	seal
7a	perforated or slotted section	7b	pressure measuring device	7b1	reservoir with filter tip
7b2	inner chamber of transducer	7e	end cap	8	filter pack
9	intake zone	10	pressure head	11	elevation of measuring point relative to RL

Figure 1 — Types of piezometer systems

5.2 Open piezometer systems

5.2.1 General

5.2.1.1 An open piezometer system shall include the following components: a filter around the measuring point, a seal above the filter and an open pipe which extends from the filter through the seal up to the ground surface.

EXAMPLE See Figure 1 a).

© ISO 2020 – All rights reserved

Documents
Document Sharing Hub
Full document details: BS EN ISO 18674-4:2020

NOTE 1 The water pressure at the piezometric level is in equilibrium with the atmospheric pressure.

NOTE 2 If the borehole extends deeper than the intake zone, a seal is placed below the filter. It is also good practice to include a seal below the filter if horizontal flow is required (e.g. for performing rising or falling head tests).

5.2.1.2 The measuring point of an open piezometer is defined as the midpoint of the intake zone.

NOTE 1 The piezometric level, measured at the measuring point of an open piezometer is influenced by the intake zone. A hydrostatic pressure distribution is assumed over the height of the intake zone.

NOTE 2 For an open piezometer, the measuring point is not related to the position of the measuring device. For example, when using a pressure transducer in an open piezometer, the measuring point remains the centre of the intake zone, which is usually not the position of the pressure transducer.

5.2.1.3 The top cap of the standpipe shall be equipped with a vent to permit unrestricted variations of the water level inside the pipe.

5.2.1.4 Measurements can be conducted either by determining the piezometric level (e.g. by a water level meter) or by measuring the water pressure in the standpipe at a specified depth below the piezometric level (e.g. by using a pressure transducer). When a pressure transducer is used to determine the piezometric level, compensation for atmospheric variations should be considered (see 5.4).

5.2.1.5 In case of artesian conditions and an overflow of the standpipe, the standpipe can be extended to a level above the highest piezometric level or the open system can be converted to a closed system (see 5.3), e.g. by sealing a pressure gauge onto the top end of the standpipe.

5.2.2 Types of open piezometer systems

5.2.2.1 General

Open piezometer systems can be of the following types:

— Open standpipe piezometer

— Monitoring well

— Casagrande piezometer

5.2.2.2 Open standpipe piezometer

An open standpipe piezometer shall include the following components:

— a straight pipe with a minimum inner diameter of 12 mm;

NOTE 1 The minimum inner diameter is related to self-de-airing of open standpipe systems.

NOTE 2 Main considerations in the selection of the inner diameter are the ground conditions and the hydrodynamic time lag. Larger diameter pipes have longer hydrodynamic time lags.

— a slotted or perforated section of the lower part of the standpipe;

NOTE 3 When used in highly permeable ground with large and rapid water variations, the openings in the perforated or slotted pipe need to be sufficiently large to minimise flow resistance.

— a filter pack around the slotted or perforated section of the standpipe according to 5.5.1.1 and 5.5.1.2;

— a sealing plug of at least 1 m above the filter pack to confine the intake zone and to avoid rain water directly entering the piezometer system;

© ISO 2020 – All rights reserved
Documents
Document Sharing Hub
Full document details: BS EN ISO 18674-4:2020

NOTE 4 When using clay pellets to form a seal, it is good practice to have at least 1 m of the seal below the groundwater level in order to allow the pellets to swell. When this is not possible, it is good practice to use a grout mixture as the seal.

— a sealing plug of at least one meter length in each confining layer. The location and length of the plug should be adjusted to the local ground conditions.

5.2.2.3 Monitoring well

5.2.2.3.1 A monitoring well (see 3.6.3) with appropriate seals may be used as an open standpipe piezometer (see 5.2.2.2) as long as the response time is acceptable for purpose.

5.2.2.3.2 Monitoring wells should be clearly distinguished from observation wells. As the groundwater regime cannot be known a priori, the use of observation wells is strongly discouraged.

NOTE Observation wells (see 3.6.4) do not classify as piezometers as they do not have seals and thus can create connections between different aquifers and disturb the groundwater regime. The use of observation wells is limited to the measurement of the groundwater level in the uppermost layer of the ground in which, from the groundwater table, the water pressure increases uniformly with depth.

5.2.2.4 Casagrande piezometer

5.2.2.4.1 A Casagrande piezometer shall include the following components:

— a low air entry filter made from appropriate material such as quartz sand, ceramic material, sintered metal or porous plastic, placed in a borehole;

— one or two standpipes of a comparatively small inner diameter attached to the filter coming up to the surface.

NOTE 1 See Figure 2.

NOTE 2 A typical inner diameter of the standpipes is 12 mm. Smaller inner diameters can be used, but it is possible that they are not self-de-airing.

5.2.2.4.2 With dual pipes the piezometer can be flushed to remove air and/or soil particles out of the system.

NOTE 1 With dual pipes (see Figure 2 b)), the diameter of the pipes can be smaller than 12 mm.

NOTE 2 The use of a larger diameter pipe (see Figure 2 c)) allows the installation of a pressure measuring device within the standpipe. The device can be retrieved and replaced.

NOTE 3 Using a special tip connection (see 9 in Figure 2 c)), a Casagrande piezometer can be converted to a closed piezometer system. The pipe(s) can be closed by a device which includes a pressure transducer and a suitable solution to seal the casing(s).

© ISO 2020 – All rights reserved

Documents
Document Sharing Hub
Full document details: BS EN ISO 18674-4:2020

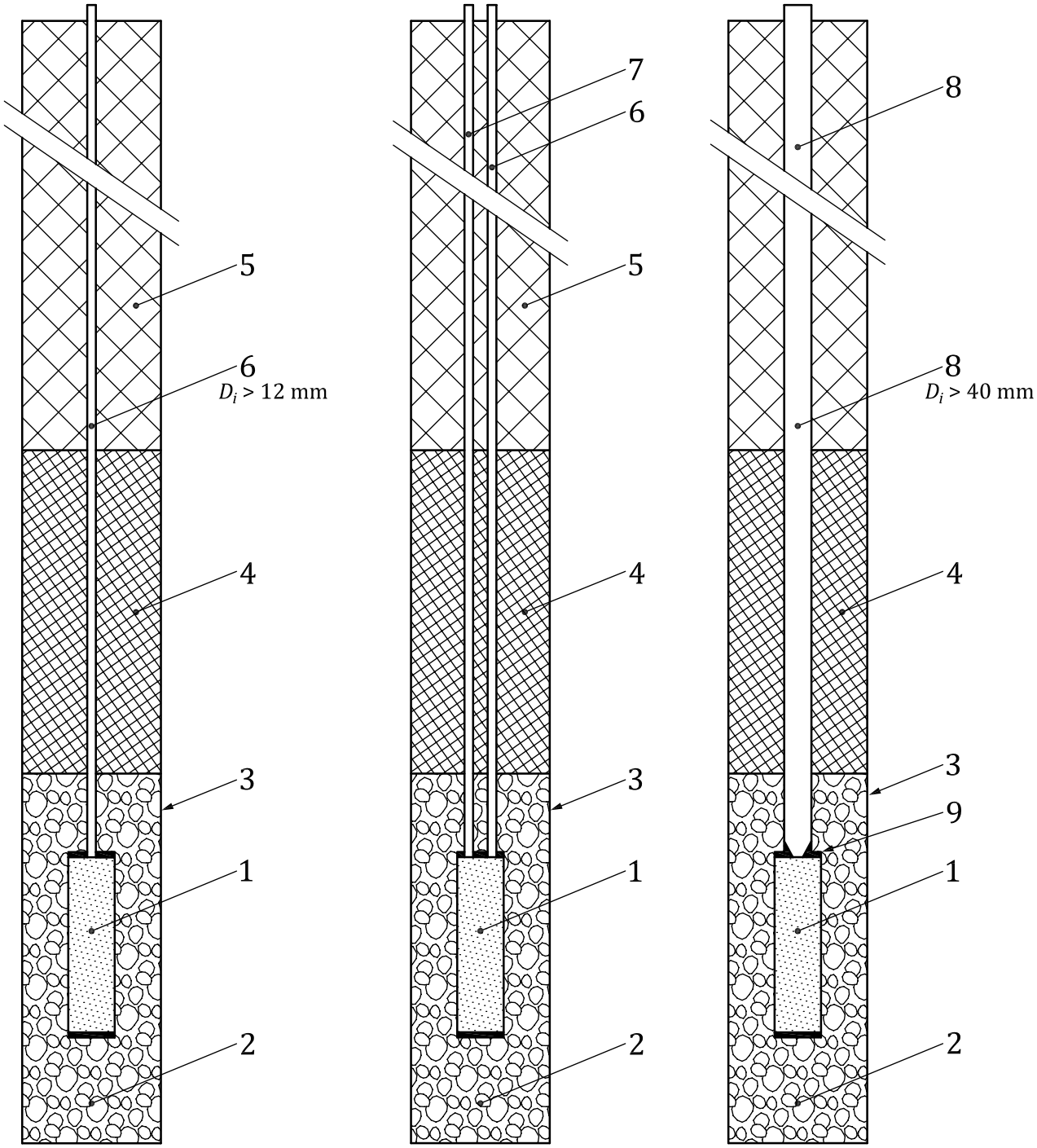

a) Single standpipe
(with common D_i)

b) Double standpipes
(with small D_i)

c) Single standpipe
(with large D_i)

Key

1 porous filter
2 filter pack (filter sand)
3 borehole wall
4 seal
5 backfill
6 small diameter pipe
7 second pipe allowing flushing
8 larger diameter pipe allowing installation of pressure transducer
9 filter tip connection (optional)

Figure 2 — Casagrande piezometer, showing different connections to the surface

© ISO 2020 – All rights reserved
Documents
Document Sharing Hub
Full document details: BS EN ISO 18674-4:2020

5.3 Closed piezometer systems

5.3.1 General

5.3.1.1 Closed piezometer systems shall include the components shown in Table 2. The components of the system are a function of the installation method.

Table 2 — Piezometer components as a function of the installation method

Installation method	Piezometer component			
	Filter tip at the measuring point	Filter pack around the filter tip	Seal above the filter	Measuring device
traditional	+	+	+	+
fully grouted	+	+[a]		+
push-in[b]	+	-	+	+
embedded	+	+	-	+

Key

+ essential

- absent

[a] The grout acts as a filter pack and as a seal, see 6.1.3.

[b] The filter tip is pushed into the ground and is in direct contact with the ground, see 6.1.3.

EXAMPLE For traditionally installed closed systems, see Figure 1 b).

NOTE The water pressure at the pressure measuring device is not necessarily in equilibrium with the atmospheric pressure.

5.3.1.2 The measuring point is the location of the diaphragm, adjacent to the filter tip.

NOTE When a filter pack is present around the filter tip, the pressure measured at the diaphragm is influenced by the intake zone and does not necessarily represent the pressure at the measuring point in the ground.

5.3.1.3 Pressure measuring devices, or components thereof, shall be located either directly near the filter tip or at the ground surface. The device located near the filter tip can be either a diaphragm pressure transducer (see Figure 3) or a pressure valve (see Figure 4). Measuring devices at the ground surface can be pressure gauges (see Figure 5), readout units and/or control panels.

© ISO 2020 – All rights reserved

Documents
Document Sharing Hub
Full document details: BS EN ISO 18674-4:2020

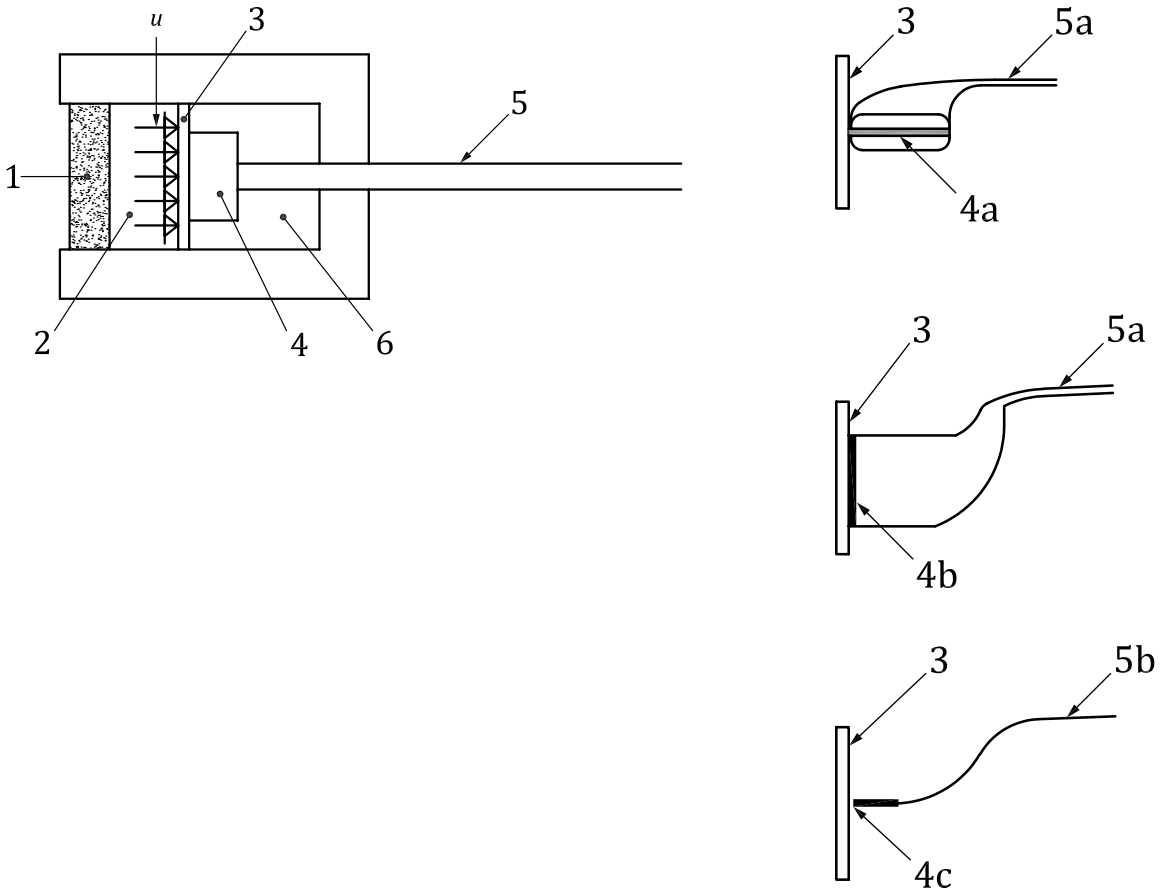

a) Diaphragm piezometer transducer (schematic)

b) Types of possible diaphragm transducers

Key

u pore water pressure
1 filter tip
2 reservoir filled with water
3 diaphragm
4 transducer
  4a vibrating wire
  4b strain gauge
  4c fiber optic gauge which measures distance to diaphragm
5 signal cable
  5a electric cable
  5b fiber optic cable
6 inner chamber

Figure 3 — Diaphragm pressure transducers of different types of closed piezometer systems

© ISO 2020 – All rights reserved
Documents
Document Sharing Hub
Full document details: BS EN ISO 18674-4:2020