BS EN ISO 19017:2017

BSI Standards Publication

Guidance for gamma spectrometry measurement of radioactive waste (ISO 19017:2015)

Documents
Document Sharing Hub

Full document details: BS EN ISO 19017:2017

National foreword

This British Standard is the UK implementation of EN ISO 19017:2017. It is identical to ISO 19017:2015. It supersedes BS ISO 19017:2015, which is withdrawn.

The UK participation in its preparation was entrusted to Technical Committee NCE/9, Nuclear fuel cycle technology.

A list of organizations represented on this committee can be obtained on request to its secretary.

This publication does not purport to include all the necessary provisions of a contract. Users are responsible for its correct application.

© The British Standards Institution 2018
Published by BSI Standards Limited 2018

ISBN 978 0 580 96935 5

ICS 17.240; 13.030.30; 27.120.30

Compliance with a British Standard cannot confer immunity from legal obligations.

This British Standard was published under the authority of the Standards Policy and Strategy Committee on 31 January 2018.

Amendments/corrigenda issued since publication

Date	Text affected
31 January 2018	This corrigendum renumbers BS ISO 19017:2015 as BS EN ISO 19017:2017

Documents
Document Sharing Hub

Full document details: BS EN ISO 19017:2017

EUROPEAN STANDARD

NORME EUROPÉENNE

EUROPÄISCHE NORM

EN ISO 19017

October 2017

ICS 17.240; 27.120.30

English Version

Guidance for gamma spectrometry measurement of radioactive waste (ISO 19017:2015)

Lignes directrices pour le mesurage de déchets radioactifs par spectrométrie gamma (ISO 19017:2015)

Leitfaden für gammaspektrometrische Messungen von radioaktivem Abfall (ISO 19017:2015)

This European Standard was approved by CEN on 13 September 2017.

CEN members are bound to comply with the CEN/CENELEC Internal Regulations which stipulate the conditions for giving this European Standard the status of a national standard without any alteration. Up-to-date lists and bibliographical references concerning such national standards may be obtained on application to the CEN-CENELEC Management Centre or to any CEN member.

This European Standard exists in three official versions (English, French, German). A version in any other language made by translation under the responsibility of a CEN member into its own language and notified to the CEN-CENELEC Management Centre has the same status as the official versions.

CEN members are the national standards bodies of Austria, Belgium, Bulgaria, Croatia, Cyprus, Czech Republic, Denmark, Estonia, Finland, Former Yugoslav Republic of Macedonia, France, Germany, Greece, Hungary, Iceland, Ireland, Italy, Latvia, Lithuania, Luxembourg, Malta, Netherlands, Norway, Poland, Portugal, Romania, Serbia, Slovakia, Slovenia, Spain, Sweden, Switzerland, Turkey and United Kingdom.

EUROPEAN COMMITTEE FOR STANDARDIZATION
COMITÉ EUROPÉEN DE NORMALISATION
EUROPÄISCHES KOMITEE FÜR NORMUNG

CEN-CENELEC Management Centre: Avenue Marnix 17, B-1000 Brussels

© 2017 CEN All rights of exploitation in any form and by any means reserved worldwide for CEN national Members.

Ref. No. EN ISO 19017:2017 E

Documents
Document Sharing Hub

Full document details: BS EN ISO 19017:2017

European foreword

The text of ISO 19017:2015 has been prepared by Technical Committee ISO/TC 85 "Nuclear energy, nuclear technologies, and radiological protection" of the International Organization for Standardization (ISO) and has been taken over as EN ISO 19017:2017 by Technical Committee CEN/TC 430 "Nuclear energy, nuclear technologies, and radiological protection" the secretariat of which is held by AFNOR.

This European Standard shall be given the status of a national standard, either by publication of an identical text or by endorsement, at the latest by April 2018, and conflicting national standards shall be withdrawn at the latest by April 2018.

Attention is drawn to the possibility that some of the elements of this document may be the subject of patent rights. CEN shall not be held responsible for identifying any or all such patent rights.

According to the CEN-CENELEC Internal Regulations, the national standards organizations of the following countries are bound to implement this European Standard: Austria, Belgium, Bulgaria, Croatia, Cyprus, Czech Republic, Denmark, Estonia, Finland, Former Yugoslav Republic of Macedonia, France, Germany, Greece, Hungary, Iceland, Ireland, Italy, Latvia, Lithuania, Luxembourg, Malta, Netherlands, Norway, Poland, Portugal, Romania, Serbia, Slovakia, Slovenia, Spain, Sweden, Switzerland, Turkey and the United Kingdom.

Endorsement notice

The text of ISO 19017:2015 has been approved by CEN as EN ISO 19017:2017 without any modification.

AVA Documents
Document Sharing Hub

Full document details: BS EN ISO 19017:2017

Contents

Page

Foreword ... **iv**

Introduction ... **v**

1 Scope ... **1**

2 Terms and definitions ... **1**

3 Application ... **7**
3.1 General ... 7
3.2 Typical applications ... 7

4 Measurement equipment ... **8**
4.1 General ... 8
4.2 Open detector geometry ... 8
4.3 Collimated detector geometry ... 10
4.4 Components of gamma measurement system ... 13
4.4.1 Mechanical equipment ... 13
4.4.2 Radiation detection equipment ... 14
4.4.3 Data acquisition and analysis unit ... 14
4.4.4 Electrical control ... 14
4.4.5 Additional equipment ... 14

5 Calibration ... **14**
5.1 General ... 14
5.2 Peak energy and shape calibration of the gamma spectrometry system ... 15
5.3 Efficiency calibration of the gamma spectrometry system ... 15
5.4 Attenuation correction techniques ... 18

6 Data evaluation ... **18**
6.1 Data processing steps ... 18
6.2 Calculation of net peak count rates ... 19
6.3 Calculation of gamma activity inventory of the waste package ... 20
6.4 Calculation of measurement uncertainty ... 20
6.5 Calculation of detection limit ... 21

7 Quality assurance ... **23**
7.1 General ... 23
7.2 Record of calibration, validation, and waste measurements ... 23
7.3 Documentation and procedures ... 24
7.4 Quality control ... 24
7.5 Competence ... 25

Annex A (informative) **Examples of application of the techniques and methods discussed within this International Standard** ... **26**

Bibliography ... **47**

© ISO 2015 – All rights reserved

Documents
Document Sharing Hub

Full document details: BS EN ISO 19017:2017

Foreword

ISO (the International Organization for Standardization) is a worldwide federation of national standards bodies (ISO member bodies). The work of preparing International Standards is normally carried out through ISO technical committees. Each member body interested in a subject for which a technical committee has been established has the right to be represented on that committee. International organizations, governmental and non-governmental, in liaison with ISO, also take part in the work. ISO collaborates closely with the International Electrotechnical Commission (IEC) on all matters of electrotechnical standardization.

The procedures used to develop this document and those intended for its further maintenance are described in the ISO/IEC Directives, Part 1. In particular the different approval criteria needed for the different types of ISO documents should be noted. This document was drafted in accordance with the editorial rules of the ISO/IEC Directives, Part 2 (see www.iso.org/directives).

Attention is drawn to the possibility that some of the elements of this document may be the subject of patent rights. ISO shall not be held responsible for identifying any or all such patent rights. Details of any patent rights identified during the development of the document will be in the Introduction and/or on the ISO list of patent declarations received (see www.iso.org/patents).

Any trade name used in this document is information given for the convenience of users and does not constitute an endorsement.

For an explanation on the meaning of ISO specific terms and expressions related to conformity assessment, as well as information about ISO's adherence to the WTO principles in the Technical Barriers to Trade (TBT) see the following URL: Foreword - Supplementary information

The committee responsible for this document is ISO/TC 85, *Nuclear energy, nuclear technologies, and radiological protection*, Subcommittee SC 5, *Nuclear fuel cycle*.

This first edition of ISO 19017 cancels and replaces ISO 14850-1:2006, which, in particular, did not take into account segmented measurements performed with collimators, the possible use of numerical simulation for calibration and uncertainty assessment, and gamma radiation detectors other than high-purity germanium semiconductors.

© ISO 2015 – All rights reserved
Documents
Document Sharing Hub
Full document details: BS EN ISO 19017:2017

Introduction

A variety of non-destructive assay techniques are routinely used within the nuclear industry to measure or provide information to otherwise enable quantification of the radionuclide inventory of packages containing radioactive materials. This International Standard specifically considers gamma spectrometry measurements made on packages containing radioactive waste.

The methods and techniques discussed within this International Standard find application in the routine assay of various types of radioactive waste, packaged in a variety of ways, employing a variety of container sizes, and types. They range from basic techniques, which have been in use for many years, through to state of the art techniques that have been developed because of the increasing variety and forms being assayed and the demands to satisfy increasingly challenging performance criteria.

Where guidance is provided, this is viewed as best current practice and is based on experience of operating quantitative gamma spectrometry measurement systems, within a variety of applications, for the purpose of providing radionuclide identification and activity information.

The objective of this International Standard is to promote a consistent approach to gamma spectrometry measurements made on packages containing radioactive waste.

© ISO 2015 – All rights reserved

Documents
Document Sharing Hub
Full document details: BS EN ISO 19017:2017

Guidance for gamma spectrometry measurement of radioactive waste

1 Scope

This International Standard is applicable to gamma radiation measurements on radioactive waste.

Radioactive waste can be found in different forms and exhibit a wide range of characteristics, including the following:

— raw or unconditioned waste, including process waste (filters, resins, control rods, scrap, etc.) and waste from dismantling or decommissioning;

— conditioned waste in various forms and matrices (bitumen, cement, hydraulic binder, etc.);

— very low level (VLLW), low level (LLW), intermediate level (ILW) and high level radioactive waste (HLW);

— different package shapes: cylinders, cubes, parallelepipeds, etc.

Guidance is provided in respect of implementation, calibration, and quality control. The diversity of applications and system realizations (ranging from research to industrial systems, from very low level to high level radioactive waste, from small to large volume packages with different shapes, with different performance requirements and allowable measuring time) renders it impossible to provide specific guidance for all instances; the objective of this International Standard is, therefore, to establish a set of guiding principles. Ultimately, implementation is to be performed by suitably qualified and experienced persons and based on a thorough understanding of the influencing factors, contributing variables and performance requirements of the specific measurement application.

This International Standard assumes that the need for the provision of such a system will have been adequately considered and that its application and performance requirements will have been adequately defined through the use of a structured requirements capture process, such as data quality objectives (DQO).

It is noted that, while outside the scope of this International Standard, many of the principles, measurement methods, and recommended practices discussed here are also equally applicable to gamma measurements of items other than radioactive waste (e.g. bulk food, water, free-standing piles of materials) or to measurements made on radioactive materials contained within non-traditional packages (e.g. in transport containers).

2 Terms and definitions

For the purposes of this document, the following terms and definitions apply.

NOTE Definitions presented here are confined mainly to those terms not defined in common nuclear material glossaries or whose use is specific to this document. Important key terms are repeated here for the convenience of the reader.

2.1
assay
procedure to determine quantitatively the amount of one or more radionuclides of interest contained in a package

© ISO 2015 – All rights reserved

Documents
Document Sharing Hub
Full document details: BS EN ISO 19017:2017

2.2
attenuation
physical process based on interaction between a radiation source and matter placed in the path of the radiation that results in a decrease in the intensity of the emitted radiation

Note 1 to entry: Attenuation experienced in *non-destructive assay* (NDA)(2.27) of waste packages includes *self-attenuation* (2.37) by the radioactive material itself as well as attenuation effects in the *waste matrix* (2.23), internal barrier(s) and external container(s).

2.3
attenuation correction factor
used to correct (compensate) for the effect of attenuation within an NDA measurement equal to the ratio between the un-attenuated and the attenuated radiation flux

Note 1 to entry: After attenuation correction the measured quantity is considered to be representative of the un-attenuated activity of the radioactive substance assayed.

2.4
bias
estimate of a systematic measurement error

2.5
calibration standard
primary standard
designated or widely acknowledged as having the highest metrological qualities and whose value is accepted without reference to other standards of the same quantity

Note 1 to entry: The calibration standard should be physically, radiologically, and chemically similar to the items to be assayed, for which the activity of the radionuclide(s) of interest and all relevant properties to which the measurement technique is sensitive are known with sufficient accuracy.

[SOURCE: www.french-metrology.com]

2.6
calibration
set of operations that establish, under specific conditions, the relationship between values of quantities indicated by a measuring system, or values represented by a material measure or a reference material and the corresponding values realized by Standards

Note 1 to entry: The result of a calibration permits either the assignment of values of measurands to the indications or the determination of indications with respect to indications.

Note 2 to entry: A calibration may also determine other metrological properties such as the effect of influence quantities.

Note 3 to entry: The result of a calibration may be recorded in a document, sometimes called a calibration certificate or a calibration report.

[SOURCE: www.french-metrology.com]

2.7
collimation
method to restrict the field of view of the detector to specific parts of the item to be measured

Note 1 to entry: A shield around the side of the detector that still allows the detector to view the entire item is technically not a collimator. Such shielding does not change the efficiency of the detector due to its presence.

2.8
collimator
device for collimating the radiation beam, usually constructed from highly attenuating material(s) such as tungsten or lead. Collimators can be of parallel wall type or divergent

© ISO 2015 – All rights reserved
Documents
Document Sharing Hub
Full document details: BS EN ISO 19017:2017

2.9
collimated (detection) geometry
measurement configuration where only a part of a waste package can contribute to the response of the detection system

Note 1 to entry: The whole activity is measured by scanning the entire package, or by assuming that the part of the package within the detector's field of view during one or more measurements is representative of the entire package.

2.10
compton continuum
continuous pulse amplitude spectrum due to Compton electrons released in a detector

Note 1 to entry: The full-energy peaks are superimposed to this continuum and their "net areas" are determined by subtracting the average Compton level estimated below each peak, as detailed in ISO 11929 for instance.

[SOURCE: IEC 60050-395:2014]

2.11
container
vessel into which the *waste form* (2.41) is placed for handling, transport, storage and/or eventual disposal

Note 1 to entry: Also the outer barrier protecting the waste from external intrusions.

[SOURCE: IAEA Radioactive Waste Management Glossary 2003 Edition]

2.12
coverage factor
although the combined standard deviation is used to express the uncertainty of many measurement results, for some commercial, industrial, and regulatory applications (e.g. when health and safety are concerned), what is often required is a measure of uncertainty that defines an interval about the measurement result within which the value of the measurand can be confidently asserted to lie

Note 1 to entry: The measure of uncertainty intended to meet this requirement is termed expanded uncertainty and is obtained by multiplying the standard deviation by a coverage factor, suggested symbol k. In general, the value of the coverage factor k is chosen on the basis of the desired level of confidence to be associated with the interval within which the true value is supposed to lie.

[SOURCE: http://physics.nist.gov/cuu/Uncertainty/coverage.html]

2.13
data quality objectives process
DQO
seven stage requirements capture process used to determine the type, quantity, and quality of data needed to support a decision

Note 1 to entry: The purpose of this process (published by the US Environmental Protection Agency) is to provide general guidance to organizations on developing data quality criteria and performance specifications for decision making.

2.14
dead time
non-operative time of the detection system during the measurement period

Note 1 to entry: The length of time, directly following an instance of detection, associated with signal processing, during which the system is not able to process further gamma events. This is a system performance parameter which is usually expressed as a percentage of the measurement period. The measured counts would be less than the actual counts due to the dead time and hence needs to be corrected.

© ISO 2015 – All rights reserved

Documents
Document Sharing Hub
Full document details: BS EN ISO 19017:2017

2.15
decision threshold
DT
value of the estimator of the measurand, which when exceeded by the result of an actual measurement using a given measurement procedure of a measurand quantifying a physical effect, one decides that the physical effect is present

Note 1 to entry: The decision threshold is defined, such that in cases, where the measurements result, y, exceeds the decision threshold, y^*, the probability that the true value of the measurand is zero is less or equal to a chosen probability, α.

Note 2 to entry: If the result, y, is below the decision threshold, y^*, the result cannot be attributed to the physical effect; nevertheless it cannot be concluded that it is absent.

[SOURCE: ISO 11929:2010, 3.6]

2.16
detection geometry
describe the extent of detector collimation with respect to the item to be measured

Note 1 to entry: Two principle assay configurations are distinguished in this guideline: collimated geometry and open geometry.

2.17
detection limit
DL
smallest true value of the measurand which ensures a specified probability of being detectable by the measurement procedure

Note 1 to entry: With the decision threshold defined above, the detection limit is the smallest true value of the measurand for which the probability of wrongly deciding that the true value of the measurand is zero is equal to a specified value, β, when, in fact, the true value of the measurand is not zero.

[SOURCE: ISO 11929:2010, 3.7]

2.18
emission computed tomography
ECT
NDA method which allows the distribution of nuclide activity to be determined within sections of the waste package

Note 1 to entry: The technique is based upon the measurement spectra from segments of the waste matrix which the detector views through a collimator. In order to obtain accurate results, it is necessary to know the matrix density distribution within the section (or in 3D), typically by *Transmission Computed Tomography* (TCT) (2.38).

Note 2 to entry: ECT is also referred to as *Tomographic Gamma Scanning* (TGS) (2.39).

2.19
full-energy peak
peak of the gamma spectrum corresponding to the complete deposition of the energy of a photon emitted by a radionuclide

Note 1 to entry: No energy loss has occurred by photon interaction in the waste package or by the escape of secondary photons from the detector following the interaction(s) of the primary photon leading to its detection.

2.20
full width at half maximum
FWHM
width of a gamma-ray peak at half of the maximum of the peak distribution

Note 1 to entry: This parameter is used to describe energy resolution. FWHM is often quoted when defining detector performance (e.g. FWHM for a given energy, such as 662 keV). FWHM can be given in energy units (e.g. keV) or in % if normalized to the gamma-ray energy.

© ISO 2015 – All rights reserved
Documents
Document Sharing Hub
Full document details: BS EN ISO 19017:2017

2.21
intrinsic detection efficiency
number of counts in the *full-energy peak* (2.19) at a given energy E (net area after subtraction of the Compton continuum and other sources of background in the gamma spectrum) divided by the number of photons at that energy that enter the detector

2.22
live time
difference between the measurement period and the dead-time

2.23
matrix
waste matrix
non-radioactive materials inside a *waste package* (2.29) in which the radioactive substances are dispersed

2.24
measurand
particular quantity subject to measurement

[SOURCE: ISO 11929:2010, 3.2]

2.25
measurement accuracy
closeness of agreement between a measured quantity value and a true quantity value of a measurand

2.26
measurement period
time frame over which the measurement is made

2.27
non-destructive assay
NDA
procedure based on the observation of spontaneous or stimulated nuclear radiation, interpreted to estimate the content of one or more radionuclides in the item which is under investigation, without affecting the physical or chemical form of the material

2.28
open (detection) geometry
measurement configuration where all parts of a *waste package* (2.29) can contribute to the response of the detection system

2.29
package
waste package
product of conditioning that includes the *waste form* (2.41) and any container(s) and internal barriers

[SOURCE: ISO 12749-3:2015, 3.5.2]

2.30
precision
statistical precision
generic term used to describe the dispersion of a set of measured values under reproducible measurement conditions

2.31
radioactive waste
material for which no further use is foreseen that contains or is contaminated with radionuclides

[SOURCE: ISO 12749-3:2015, 3.7.1]

© ISO 2015 – All rights reserved

Documents
Document Sharing Hub
Full document details: BS EN ISO 19017:2017

2.32
radioactivity
phenomenon whereby atoms undergo spontaneous random disintegration, usually accompanied by the emission of radiation

[SOURCE: IAEA Radioactive Waste Management Glossary 2003 Edition]

2.33
radionuclide
nucleus (of an atom) that possesses properties of spontaneous disintegration (*radioactivity* (2.32))

Note 1 to entry: Nuclei are distinguished by their mass and atomic number.

[SOURCE: IAEA Radioactive Waste Management Glossary 2003 Edition]

2.34
scanning profile
distribution of recorded system responses as a function of successive scan positions

2.35
segment (gamma) spectrum
emission gamma spectrum collected from only a part of a *waste package* (2.29)

2.36
segmented gamma scanning
SGS
procedure to measure one or more *segment spectra* (2.35) of a waste package

Note 1 to entry: Segmented gamma scanning requires the use of a *collimated detection geometry* (2.9). There are several manifestations of SGS which are currently in use. For this International Standard we distinguish vertical, horizontal and angular scanning, see Figure 3, which can be combined or used partly (in practice SGS usually refers to the combination of vertical scanning and continuous rotation).

— **vertical scanning** [see Figure 3 a)] consists in acquiring vertically segmented gamma spectra representative of stacked slices of the package. The mechanical movement can be step-by-step, with an acquisition for each slice, or continuous with a time-segmented acquisition (mechanics is simpler and measurement time is shorter, but interpretation is more complex). Vertical scanning is most commonly used in combination with continuous rotation.

— **horizontal scanning** [see Figure 3 b)], is most commonly used in combination with angular and vertical scanning for TGS, and also for objects without rotational symmetry in combination with vertical scanning.

— **angular scanning** [see Figure 3 c)], is rarely used alone but as part of TGS systems. This can be functionally accomplished with a single detector or multiple detectors to limit acquisition time (as shown), and with step rotation or continuous rotation with timely segmented acquisition.

2.37
self-attenuation
self-absorption
attenuation of the gamma radiation in a nuclear material itself (like Pu or U)

Note 1 to entry: This effect is here distinguished from the attenuation of the gamma radiation in nonnuclear materials like the waste matrix, internal shields, container, external shields, collimators, etc.

2.38
transmission computed tomography
TCT
gamma or X-ray transmission technique to determine the matrix density distribution within sections of the waste package, by angular and horizontal scanning, as for ECT and in 3D with an additional vertical scanning

Note 1 to entry: 3D densitometry allows more accurate corrections for attenuation of gamma radiation within non-uniform matrices.

© ISO 2015 – All rights reserved
Documents
Document Sharing Hub
Full document details: BS EN ISO 19017:2017

Note 2 to entry: Both in ECT and TCT, 2D sections can be reconstructed by angular and horizontal scanning, and the complete 3D information can be obtained by superimposing the slices vertically or by performing a continuous helical scan.

2.39
tomographic gamma scanning
TGS
typically a combination of emission computed tomography (ECT) and transmission computed tomography (TCT)

2.40
total detection efficiency
number of counts in the full-energy peak (net area) per photon of energy (E) emitted in the waste package

2.41
waste form
physical and chemical form after treatment or conditioning prior to packaging and which is a component of the *waste package* (2.29)

[SOURCE: ISO 12749-3:2015, 3.7.6]

3 Application

3.1 General

Measurement of gamma radiation emissions provides a non-destructive method of establishing the inventory of gamma-emitting radionuclides inside a waste package.

Gamma measurements can be performed using relatively unsophisticated techniques (such as Open Detector Geometry, see 4.2) and measurement procedures where the waste and matrix are well understood or where source and matrix can be considered to be uniformly distributed (such that a simple form of measurement can provide a representative result).

Alternatively, there may be little or no knowledge of the sources present, the activity distributions, the matrix composition or homogeneity; in these cases, it is often necessary to consider more complex techniques (such as Collimated Detector Geometries, see 4.3).

Depending on gamma irradiation level, shields and/or a collimated geometry may also be necessary to keep the detector and acquisition system count rates within operating limits.

3.2 Typical applications

Gamma radiation measurement systems are currently employed in a variety of radioactive waste package measurement applications, such as the following:

— inventory assignment ahead of waste processing, storage or transport;

— inventory verification ahead of waste processing, storage or transport;

— waste inspection during interim storage or final disposal,

— quality checking of waste conditioning processes;

— free release measurements.

NOTE Gamma spectroscopy is used in many applications beyond the scope of this International Standard, such as process control, radioactivity assessment of environmental media (soil, vegetation, water, etc.), characterization of post-accident clean-up debris, bulk material measurements, etc. The same principles and good practices may often apply in these fields.

© ISO 2015 – All rights reserved

Documents
Document Sharing Hub
Full document details: BS EN ISO 19017:2017

Radionuclides to be detected by this method must emit gamma radiation with sufficient intensity and energy to penetrate the surrounding materials and escape the containment before they can be measured.

The useful energy range is dependent on a number of factors such as the composition and distribution of the matrix; the source position and/or source distribution inside the package and the type and dimension of the container. For most applications, the gamma radiation energies of interest in waste assay lie within the range from a few tens keV to 3 MeV. The energy of the gamma radiations that may be successfully detected in different applications and under different conditions may have a reduced range.

4 Measurement equipment

4.1 General

A number of different types of system are currently used to perform gamma radiation measurements on packages containing radioactive waste. It is not the intention of this International Standard to focus on the specific design of any type of system. The objective is to concentrate on the general aspects relevant for implementation in specific measurement configurations and for performance assessment. Some examples of measurement systems, currently in use in assay applications are given in Annex A. The contents of Annex A are provided for information only; they should not be considered to be mandatory; neither should they be considered exhaustive.

In instances where measurements are made on packages containing radioactive waste, the objective of the measurement is generally to enable the operator to establish the activity of radionuclides of interest within the package, within the context of the application. The information required can vary from application to application. For instance, the information required for criticality control within the confines of the site of origin may be a sub-set of the total radionuclide inventory of the package including only fissile isotopes (e.g. ^{235}U, ^{239}Pu, ^{241}Pu); a more complete radionuclide inventory may be required to enable transport through the public domain (e.g. a number of beta and alpha activities) and this may be different from the information required for ultimate disposal (whole inventory including for instance long-lives isotopes). Equally, the performance requirements of the system may vary from application to application. However, in all instances, the functionality and performance requirements for the system shall be established prior to development of the system.

This Clause describes the basic characteristics of systems currently employed to perform gamma radiation measurements on packages containing nuclear waste. Systems currently in use range from simple systems (incorporating a single, uncollimated detector) through to complex systems (incorporating multiple detectors, advanced scanning techniques, and state of the art counting equipment).

For waste packages with revolution symmetry, a common feature of most gamma measurement systems is a turntable to rotate the package during the measurement. Box-shaped packages are commonly measured several times from multiple locations and sides. These multiple measurements and rotation are primarily performed to average variations in system response from non-homogeneous waste.

Measurement systems can be broadly classified according to the detection geometry and measurement procedure as

— open detector geometry, and

— collimated detector geometry.

Gamma spectrometry systems may use single detectors or multiple detectors, to increase system throughput. Throughout this International Standard, reference will only be given to single-detector instruments because the performance characteristics of both types show no principal differences despite the superior efficiency of multiple-detector systems.

4.2 Open detector geometry

The basic configuration for this type of measurement involves one or more detectors, which are located in a fixed position relative to the waste package. The open geometry configuration is set-up so that all

© ISO 2015 – All rights reserved
AVA Documents Document Sharing Hub
Full document details: BS EN ISO 19017:2017

parts of a package contribute to the response of the detector (see Figure 1). The package may be rotated during the measurement or multiple measurements made from different directions can be averaged to reduce the measurement uncertainty in case of non-uniform radioactivity in the package. The decision to rotate the package or to perform multiple view acquisitions depends on the heterogeneity of the waste (materials and activity) and its impact on uncertainty. The choice may be the result of a trade-off between uncertainty objectives and practical limitations (e.g. for cylindrical packages, rotation is the most common practice, while for cubic or parallelepipedic packages each face is generally measured).

Systems based on this type of configuration have the advantage of simpler hardware and generally higher detection efficiency compared to systems that employ collimated geometry and a scanning system. Practical experience is that open geometry measurement systems usually yield significantly lower detection limits; however, the results from this method are generally more sensitive to the distribution of activity and variations in the density of the waste matrix.

If waste material and activity distributions are known to be quite homogeneous, a gamma transmission technique can be used to correct for matrix attenuation (density and composition effects). The clause of the waste interrogated by the transmission source shall be as representative as possible of the entire volume. Representation can be improved by using multiple external transmission sources, placed so as to interrogate the upper portion, at half height, and the bottom portion of the package; alternatively, a continuous vertical scan can be implemented (however, this complicates both hardware and software). The package may be rotated during the transmission measurement; alternatively, multiple measurements can be made from different directions, and averaged.

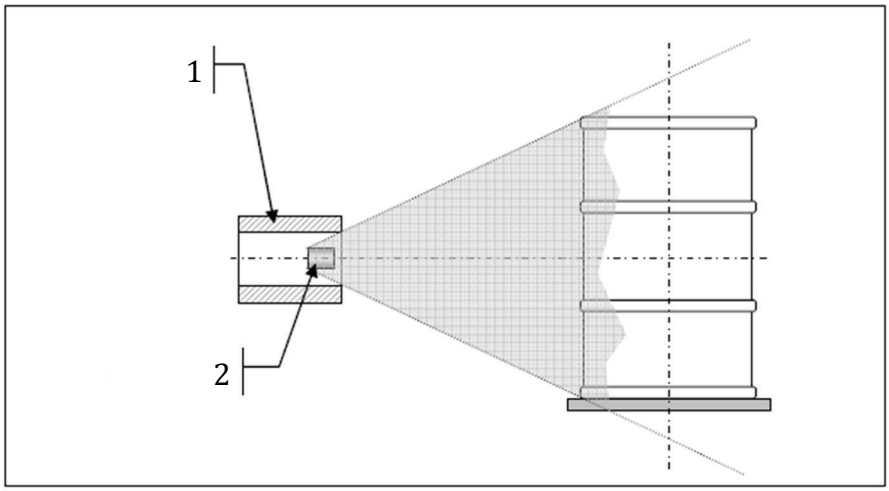

Key

1 shielding

2 detector

NOTE A background reduction shield, surrounding the side and sometimes the back of the detector is desirable. However, this is to be designed to keep the entire package within the field of view of the detector.

Figure 1 — Open detector geometry (transmission correction source not shown)

Open detector geometry is applicable when variations in activity distribution within the package and other waste characteristics (in particular density distribution) will not result in punitively large measurement uncertainty.[1)]

If the waste is heterogeneous, the measurement uncertainty may be punitively large, even with package rotation or multiple measurements made from different directions, and with gamma transmission

1) Rotating the package during acquisition allows reducing the uncertainty due to radial heterogeneity.

© ISO 2015 – All rights reserved

AVA Documents Document Sharing Hub
Full document details: BS EN ISO 19017:2017

measurement. In this instance, collimated detector geometry coupled with techniques like segmented gamma scanning (SGS) or tomographic gamma scanning (TGS) discussed below may be more appropriate.

NOTE Measurement uncertainty is discussed in 6.4.

4.3 Collimated detector geometry

Collimation may be used to restrict the field of view of the detector, or detectors, to specific parts of the waste package (see Figure 2). It restricts the size and angle of the beam of radiation falling on the detector.

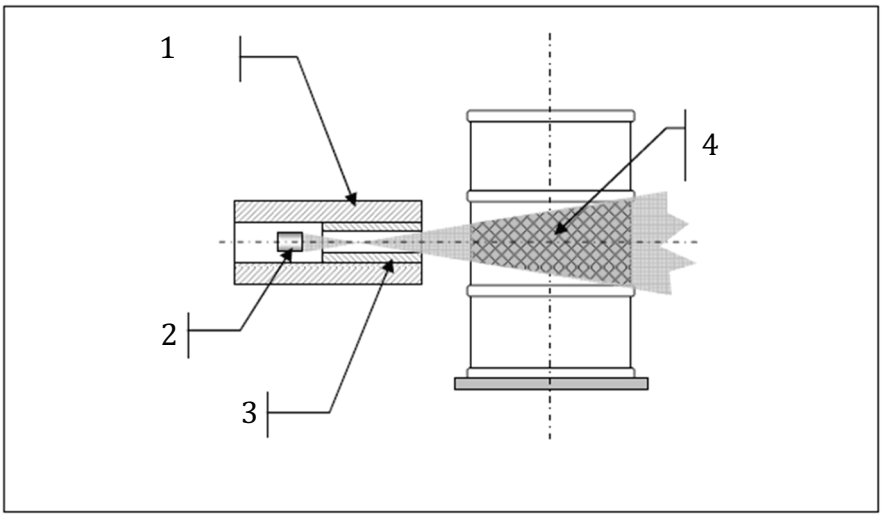

Key

1 shielding
2 detector
3 collimator
4 measured volume

Figure 2 — Collimated detector geometry

This technique is an essential component of SGS,[2)] which requires the field of view of the detector to be restricted such that the spectrum collected is the result of the activity contributions from species present in specific portions (segments) of the package, rather than the package as a whole.

Since collimated geometries only view a small portion of the package, they are almost always combined with some other method to obtain a representative view of the full package. These methods include horizontal scanning, vertical scanning, angular scanning, or continuous rotation and multiple detectors in fixed positions. Combinations of these methods are frequently used.

The geometry of the collimator is a function of the type of scanning employed and the positional resolution required.

There are several manifestations of SGS2 which are currently in use:

— vertical scanning [see Figure 3 a)], consists of acquiring vertically segmented gamma spectra, representative of stacked slices of the package. The mechanical movement can be step-by-step, with an acquisition for each slice, or continuous with a time-segmented acquisition (mechanics are simpler and measurement time is shorter, but interpretation is more complex). Vertical scanning is most commonly used in combination with continuous rotation2; which are also typically coupled to a gamma transmission measurement, to correct for (variable) matrix attenuation;

2) In practice, the term "SGS" usually refers to the simple combination of vertical scanning and continuous rotation (contrary to the step rotation of angular scanning) of the package. We use here this term in its general sense.

© ISO 2015 – All rights reserved
Documents Document Sharing Hub
Full document details: BS EN ISO 19017:2017