BS EN ISO 19085-9:2024

BSI Standards Publication

# Woodworking machines — Safety

Part 9: Circular saw benches (with and without sliding table)

Documents
Document Sharing Hub

Full document details: BS EN ISO 19085-9:2024

# National foreword

This British Standard is the UK implementation of EN ISO 19085-9:2024. It is identical to ISO 19085-9:2024. It supersedes BS EN ISO 19085-9:2020, which is withdrawn.

The UK participation in its preparation was entrusted to Technical Committee MTE/23, Woodworking machines.

A list of organizations represented on this committee can be obtained on request to its committee manager.

**Contractual and legal considerations**

This publication has been prepared in good faith, however no representation, warranty, assurance or undertaking (express or implied) is or will be made, and no responsibility or liability is or will be accepted by BSI in relation to the adequacy, accuracy, completeness or reasonableness of this publication. All and any such responsibility and liability is expressly disclaimed to the full extent permitted by the law.

This publication is provided as is, and is to be used at the recipient's own risk.

The recipient is advised to consider seeking professional guidance with respect to its use of this publication.

This publication is not intended to constitute a contract. Users are responsible for its correct application.

This publication has been prepared under a mandate given to the European Standards Organizations by the European Commission and the European Free Trade Association. It is intended to support requirements of the EU legislation detailed in the European Foreword. A European Annex, usually Annex ZA or ZZ, describes how this publication relates to that EU legislation.

For the Great Britain market (England, Scotland and Wales), if UK Government has designated this publication for conformity with UKCA marking (or similar) legislation, it may contain an additional National Annex. Where such a National Annex exists, it shows the correlation between this publication and the relevant UK legislation. If there is no National Annex of this kind, the relevant Annex ZA or ZZ in the body of the European text will indicate the relationship to UK regulation applicable in Great Britain. References to EU legislation may need to be read in accordance with the UK designation and the applicable UK law. Further information on designated standards can be found at www.bsigroup.com/standardsandregulation.

For the Northern Ireland market, UK law will continue to implement relevant EU law subject to periodic confirmation. Therefore Annex ZA/ZZ in the European text, and references to EU legislation, are still valid for this market.

UK Government is responsible for legislation. For information on legislation and policies relating to that legislation, consult the relevant pages of www.gov.uk.

© The British Standards Institution 2024
Published by BSI Standards Limited 2024

ISBN 978 0 539 21789 6

Documents
Document Sharing Hub

Full document details: BS EN ISO 19085-9:2024

ICS 13.110; 79.120.10

**Compliance with a British Standard cannot confer immunity from legal obligations.**

This British Standard was published under the authority of the Standards Policy and Strategy Committee on 31 October 2024.

**Amendments/corrigenda issued since publication**

| Date | Text affected |
| --- | --- |

Documents
Document Sharing Hub

Full document details: BS EN ISO 19085-9:2024

Documents
Document Sharing Hub

EUROPEAN STANDARD

NORME EUROPÉENNE

EUROPÄISCHE NORM

# EN ISO 19085-9

October 2024

ICS 13.110; 79.120.10

Supersedes EN ISO 19085-9:2020

English Version

# Woodworking machines - Safety - Part 9: Circular saw benches (with and without sliding table) (ISO 19085-9:2024)

Machines à bois - Sécurité - Partie 9: Scies circulaires à table de menuisier (avec et sans table mobile) (ISO 19085-9:2024)

Holzbearbeitungsmaschinen - Sicherheit - Teil 9: Tischkreissägemaschinen (mit und ohne Schiebetisch) (ISO 19085-9:2024)

This European Standard was approved by CEN on 20 July 2024.

CEN members are bound to comply with the CEN/CENELEC Internal Regulations which stipulate the conditions for giving this European Standard the status of a national standard without any alteration. Up-to-date lists and bibliographical references concerning such national standards may be obtained on application to the CEN-CENELEC Management Centre or to any CEN member.

This European Standard exists in three official versions (English, French, German). A version in any other language made by translation under the responsibility of a CEN member into its own language and notified to the CEN-CENELEC Management Centre has the same status as the official versions.

CEN members are the national standards bodies of Austria, Belgium, Bulgaria, Croatia, Cyprus, Czech Republic, Denmark, Estonia, Finland, France, Germany, Greece, Hungary, Iceland, Ireland, Italy, Latvia, Lithuania, Luxembourg, Malta, Netherlands, Norway, Poland, Portugal, Republic of North Macedonia, Romania, Serbia, Slovakia, Slovenia, Spain, Sweden, Switzerland, Türkiye and United Kingdom.

EUROPEAN COMMITTEE FOR STANDARDIZATION
COMITÉ EUROPÉEN DE NORMALISATION
EUROPÄISCHES KOMITEE FÜR NORMUNG

**CEN-CENELEC Management Centre: Rue de la Science 23, B-1040 Brussels**

© 2024 CEN All rights of exploitation in any form and by any means reserved worldwide for CEN national Members.

Ref. No. EN ISO 19085-9:2024 E

Documents
Document Sharing Hub

Full document details: BS EN ISO 19085-9:2024

## European foreword

This document (EN ISO 19085-9:2024) has been prepared by Technical Committee ISO/TC 39 "Machine tools" in collaboration with Technical Committee CEN/TC 142 “Woodworking machines - Safety” the secretariat of which is held by UNI.

This European Standard shall be given the status of a national standard, either by publication of an identical text or by endorsement, at the latest by April 2025, and conflicting national standards shall be withdrawn at the latest by April 2025.

Attention is drawn to the possibility that some of the elements of this document may be the subject of patent rights. CEN shall not be held responsible for identifying any or all such patent rights.

This document supersedes EN ISO 19085-9:2020.

This document is intended to be used in conjunction with Part 1 of the series.

This document has been prepared under a standardization request addressed to CEN by the European Commission. The Standing Committee of the EFTA States subsequently approves these requests for its Member States.

For the relationship with EU Legislation, see informative Annex ZA, which is an integral part of this document.

Any feedback and questions on this document should be directed to the users’ national standards body/national committee. A complete listing of these bodies can be found on the CEN website.

According to the CEN-CENELEC Internal Regulations, the national standards organizations of the following countries are bound to implement this European Standard: Austria, Belgium, Bulgaria, Croatia, Cyprus, Czech Republic, Denmark, Estonia, Finland, France, Germany, Greece, Hungary, Iceland, Ireland, Italy, Latvia, Lithuania, Luxembourg, Malta, Netherlands, Norway, Poland, Portugal, Republic of North Macedonia, Romania, Serbia, Slovakia, Slovenia, Spain, Sweden, Switzerland, Türkiye and the United Kingdom.

## Endorsement notice

The text of ISO 19085-9:2024 has been approved by CEN as EN ISO 19085-9:2024 without any modification.

Documents
Document Sharing Hub

Full document details: BS EN ISO 19085-9:2024

# Annex ZA
(informative)

## Relationship between this European Standard and the essential requirements of Directive 2006/42/EC aimed to be covered

This European Standard has been prepared under a Commission's standardization request "M/396 Mandate to CEN and CENELEC for Standardisation in the field of machinery" to provide one voluntary means of conforming to essential requirements of Directive 2006/42/EC of the European Parliament and of the Council of 17 May 2006 on machinery, and amending Directive 95/16/EC (recast).

Once this standard is cited in the Official Journal of the European Union under that Directive, compliance with the normative clauses of this standard given in Table ZA.1 confers, within the limits of the scope of this standard, a presumption of conformity with the corresponding essential requirements of that Directive, and associated EFTA regulations.

**Table ZA.1 — Correspondence between this European Standard and Annex I of Directive 2006/42/EC**

| The relevant Essential Requirements of Directive 2006/42/EC | Clauses/sub-clauses of this EN | Remarks/Notes |
|---|---|---|
| 1.1.2 Principles of safety integration | | |
| fitted for its function | Clauses 4, 5, 6, 7 | |
| intended use and reasonably foreseeable misuse | Clauses 4, 5, 6, 7 | |
| constraints in use | Clauses 4, 5, 6, 7 | |
| equipment | Clauses 4, 5, 6, 7 | |
| 1.1.3 Materials and products | 5.2, 6.3 | |
| 1.1.5 Design of machinery to facilitate its handling | 6.5 | |
| 1.1.6 Ergonomics | 6.5 | |
| 1.2.1 Safety and reliability of control systems | 4.1, 4.3.1, 4.14 | |
| 1.2.2 Control devices | 4.2, 4.3, 4.4, 4.7 | |
| 1.2.3 Starting | 4.3 | |
| 1.2.4.1 Normal stop | 4.4.2, 4.5 | |
| 1.2.4.3 Emergency stop | 4.4.4, 4.5 | |
| 1.2.6 Failure of the power supply | 4.8, 6.7 | |
| 1.3.1 Risk of loss of stability | 5.1, 7.3 | |
| 1.3.2 Risk of break-up during operation | 4.3.1, 5.2, 5.9, 6.7, 6.14, 7.3 | |
| 1.3.3 Risks due to falling or ejected objects | 5.2, 5.3, 5.5, 5.8, 5.9, 7.3 | |
| 1.3.6 Risks relating to variations in the operating conditions | 4.7 | |
| 1.3.7 Risks related to moving parts | 5.6, 5.7, 7.3 | |
| 1.3.8 Choice of protection against risks related to moving parts | 4.14, 5.5, 5.6, 5.7, 7.3 | |

AVA Documents
Document Sharing Hub

Full document details: BS EN ISO 19085-9:2024

| The relevant Essential Requirements of Directive 2006/42/EC | Clauses/sub-clauses of this EN | Remarks/Notes |
|---|---|---|
| 1.3.9 Risk of uncontrolled movements | 4.1, 4.3.1, 4.5, 5.4 | |
| 1.4.1 General requirements | 5.2, 5.5, 5.6, 5.9, 6.3 | |
| 1.4.2.1 Fixed guards | 5.5.1 | |
| 1.4.2.2 Interlocking movable guards | 5.5.2 | |
| 1.4.2.3 Adjustable guards restricting access | 5.6.1 | |
| 1.4.3 Special requirements for protective devices | 5.5.3, 5.5.6 | |
| 1.5.1 Electricity supply | 6.4, 6.13 | |
| 1.5.2 Static electricity | 6.11 | |
| 1.5.3 Energy supply other than electricity | 6.7 | |
| 1.5.4 Errors of fitting | 6.12 | |
| 1.5.6 Fire | 6.1, 6.11 | |
| 1.5.8 Noise | 6.2, Annex F | |
| 1.5.11 External radiation | 6.9 | |
| 1.5.12 Laser equipment | 6.10 | |
| 1.5.13 Emission of hazardous materials and substances | 6.3 | |
| 1.6.1 Machinery maintenance | 6.14, 7.3 | |
| 1.6.2 Access to operating position and servicing points | 4.2, 6.14, 7.3 | |
| 1.6.3 Isolation of energy sources | 6.13, 7.3 | |
| 1.6.4 Operator intervention | 5.5, 5.6, 7.3 | |
| 1.7.1 Information and warnings on the machinery | 6.10, 7.1, 7.2 | |
| 1.7.2 Warning of residual risks | 6.10, 7.1 | |
| 1.7.3 Marking of machinery | 7.2 | |
| 1.7.4 Instructions | 6.2, 6.10, 7.3, Annex F | |
| 2.3 Machinery for working wood and analogous materials | | |
| guiding | 5.1, 5.10 | |
| ejection | 5.9 | |
| brake | 4.5, 5.4 | |
| accidental tool contact | 5.5, 5.6 | |

**WARNING 1** Presumption of conformity stays valid only as long as a reference to this European standard is maintained in the list published in the Official Journal of the European Union. Users of this standard should consult frequently the latest list published in the Official Journal of the European Union.

**WARNING 2** Other Union legislation may be applicable to the product(s) falling within the scope of this standard.

Documents
Document Sharing Hub

Full document details: BS EN ISO 19085-9:2024

# Contents

Page

**Foreword** ... **v**
**Introduction** ... **vi**
**1 Scope** ... **1**
**2 Normative references** ... **1**
**3 Terms and definitions** ... **2**
**4 Safety requirements and measures for controls** ... **3**
4.1 Safety and reliability of control systems ... 3
4.2 Control devices ... 3
4.3 Start ... 4
4.3.1 Direct start ... 4
4.3.2 Start via control power-on ... 5
4.4 Safe stops ... 5
4.4.1 General ... 5
4.4.2 Normal stop ... 5
4.4.3 Operational stop ... 5
4.4.4 Emergency stop ... 5
4.5 Braking function of tools ... 5
4.6 Mode selection ... 5
4.7 Tool speed changing ... 5
4.7.1 Speed changing by shifting the belts on the pulleys ... 5
4.7.2 Speed changing by incremental speed change motor ... 5
4.7.3 Infinitely variable speed by frequency inverter ... 5
4.8 Failure of any power supply ... 5
4.9 Manual reset control ... 5
4.10 Standstill detection and monitoring ... 6
4.11 Machine moving parts speed monitoring ... 6
4.12 Time delay ... 6
4.13 Teleservice ... 6
4.14 Power-operated adjustment of the saw blades and the rip fence ... 6
4.14.1 Risk of contact between the saw blades and the rip fence ... 6
4.14.2 Crushing hazard for the body ... 6
4.14.3 Crushing and shearing hazard for the arm, hand or finger ... 7
**5 Safety requirements and measures for protection against mechanical hazards** ... **7**
5.1 Stability ... 7
5.2 Risk of break-up during operation ... 7
5.3 Tool and tool fixing design ... 8
5.3.1 General ... 8
5.3.2 Spindle locking ... 8
5.3.3 Circular saw blade fixing device ... 8
5.3.4 Flange dimension for circular saw blades ... 8
5.3.5 Fixing device for milling tools ... 8
5.4 Braking ... 8
5.4.1 Braking of tools ... 8
5.4.2 Maximum run-down time ... 8
5.4.3 Brake release ... 8
5.5 Safeguards ... 8
5.5.1 Fixed guards ... 8
5.5.2 Interlocking movable guards ... 9
5.5.3 Hold-to-run control ... 9
5.5.4 Two-hand control ... 9
5.5.5 Electro-sensitive protective equipment (ESPE) ... 9
5.5.6 Pressure-sensitive protective equipment (PSPE) ... 9
5.5.7 Enabling control ... 9

© ISO 2024 – All rights reserved



Documents
Document Sharing Hub
Full document details: BS EN ISO 19085-9:2024

5.6 Prevention of access to hazardous moving parts 9
5.6.1 Access to the saw blade part above the machine table 9
5.6.2 Access to the saw blade part below the machine table 14
5.6.3 Guarding of drives 15
5.7 Impact hazard 15
5.8 Clamping devices 15
5.9 Measures against ejection 15
5.9.1 General 15
5.9.2 Guards materials and characteristics 15
5.9.3 Anti-kickback devices 16
5.10 Workpiece supports and guides 19
5.10.1 Rip fence 19
5.10.2 Cross-cut fence 21
5.10.3 Machine table 21
5.10.4 Extension table 22
5.11 Safety appliances 22

**6 Safety requirements and measures for protection against other hazards 23**
6.1 Fire 23
6.2 Noise 23
6.2.1 Noise reduction at the design stage 23
6.2.2 Noise emission measurement and declaration 23
6.3 Emission of chips and dust 23
6.4 Electricity 24
6.5 Ergonomics and handling 24
6.6 Lighting 24
6.7 Pneumatics 24
6.8 Hydraulics 24
6.9 Electromagnetic compatibility 24
6.10 Laser 24
6.11 Static electricity 24
6.12 Errors of fitting 25
6.13 Isolation 25
6.14 Maintenance 25
6.15 Relevant but not significant hazards 25

**7 Information for use 25**
7.1 Warning devices 25
7.2 Marking 25
7.2.1 General 25
7.2.2 Additional markings 25
7.3 Instruction handbook 26
7.3.1 General 26
7.3.2 Additional information 26

**Annex A** (informative) **List of significant hazards 28**

**Annex B** (informative) **Performance level required 30**

**Annex C** (normative) **Stability test 31**

**Annex D** (normative) **Test for braking function 32**

**Annex E** (normative) **Impact test for guards 33**

**Annex F** (normative) **Noise test code 34**

**Annex G** (normative) **Riving knife rigidity test 37**

**Annex H** (normative) **Minimum dimensions of machine table, extension table and table insert 39**

**Annex I** (normative) **Saw blade guard rigidity test 40**

**Bibliography 43**

© ISO 2024 – All rights reserved



Documents
Document Sharing Hub
Full document details: BS EN ISO 19085-9:2024

# Foreword

ISO (the International Organization for Standardization) is a worldwide federation of national standards bodies (ISO member bodies). The work of preparing International Standards is normally carried out through ISO technical committees. Each member body interested in a subject for which a technical committee has been established has the right to be represented on that committee. International organizations, governmental and non-governmental, in liaison with ISO, also take part in the work. ISO collaborates closely with the International Electrotechnical Commission (IEC) on all matters of electrotechnical standardization.

The procedures used to develop this document and those intended for its further maintenance are described in the ISO/IEC Directives, Part 1. In particular, the different approval criteria needed for the different types of ISO document should be noted. This document was drafted in accordance with the editorial rules of the ISO/IEC Directives, Part 2 (see www.iso.org/directives).

ISO draws attention to the possibility that the implementation of this document may involve the use of (a) patent(s). ISO takes no position concerning the evidence, validity or applicability of any claimed patent rights in respect thereof. As of the date of publication of this document, ISO had not received notice of (a) patent(s) which may be required to implement this document. However, implementers are cautioned that this may not represent the latest information, which may be obtained from the patent database available at www.iso.org/patents. ISO shall not be held responsible for identifying any or all such patent rights.

Any trade name used in this document is information given for the convenience of users and does not constitute an endorsement.

For an explanation of the voluntary nature of standards, the meaning of ISO specific terms and expressions related to conformity assessment, as well as information about ISO's adherence to the World Trade Organization (WTO) principles in the Technical Barriers to Trade (TBT), see www.iso.org/iso/foreword.html.

This document was prepared by Technical Committee ISO/TC 39, *Machine tools*, Subcommittee SC 4, *Woodworking machines*, in collaboration with the European Committee for Standardization (CEN) Technical Committee CEN/TC 142, *Woodworking machines - Safety,* in accordance with the Agreement on technical cooperation between ISO and CEN (Vienna Agreement).

This second edition cancels and replaces the first edition (ISO 19085-9:2019), which has been technically revised. The main changes are as follows:

— the Scope now specifies that machines are capable of continuous production use;

— displaceable machines are not referenced anymore;

— the list of significant hazards has been moved to new Annex A;

— the structure has been simplified and modified, in particular for 5.6;

— subclause 6.2 has been updated;

— a new full noise test code has been added in Annex F.

A list of all parts in the ISO 19085 series can be found on the ISO website.

Any feedback or questions on this document should be directed to the user's national standards body. A complete listing of these bodies can be found at www.iso.org/members.html.

© ISO 2024 – All rights reserved



Documents
Document Sharing Hub
Full document details: BS EN ISO 19085-9:2024

# Introduction

The ISO 19085 series provides technical safety requirements for the design and construction of woodworking machinery, as well as for the content of the relevant instruction handbook. It concerns designers, manufacturers, suppliers and importers of the machines specified in the Scope.

This document is a type-C standard as defined in ISO 12100:2010.

This document is of relevance, in particular, for the following stakeholder groups representing the market players with regard to machinery safety:

— machine manufacturers (small, medium and large enterprises);

— health and safety bodies (e.g. regulators, accident prevention organisations, market surveillance)

Others can be affected by the level of machinery safety achieved with the means of the document by the above-mentioned stakeholder groups:

— machine users/employers (small, medium and large enterprises);

— machine users/employees (e.g. trade unions, organizations for people with special needs);

— service providers, e.g. for maintenance (small, medium and large enterprises);

— consumers (in case of machinery intended for use by consumers).

The above-mentioned stakeholder groups have been given the possibility to participate in the drafting process of this document.

The machinery concerned and the extent to which hazards, hazardous situations or hazardous events are covered are indicated in the Scope of this document.

When requirements of this type-C standard are different from those which are stated in type-A or type-B standards (as defined in ISO 12100:2010), the requirements of this type-C standard take precedence over the requirements of the other standards for machines that have been designed and built according to the requirements of this type-C standard.

The full set of requirements for a particular type of woodworking machine are those given in the part of the ISO 19085 series applicable to that type, together with the relevant requirements from ISO 19085-1:2021, to the extent specified in the Scope of the applicable part of the ISO 19085 series.

As far as possible, the safety requirements of parts of the ISO 19085 series refer to the relevant clauses of ISO 19085-1:2021. Each part includes replacements and additions to the common requirements given in ISO 19085-1:2021.

All parts of the ISO 19085 series have the same structure, so that reference to ISO 19085-1:2021 is made always and only from and to the same subclause number.

Clauses 1 to 3 are specific to each part and, therefore are distinct from ISO 19085-1:2021, Clauses 1 to 3.

For Clauses 4 to 7 and the annexes, each subclause in ISO 19085-1:2021, is cited as:

— confirmed as a whole;

— confirmed with additions;

— excluded in total; or

— replaced with specific text.

This is indicated by one of the following possible statements:

— “ISO 19085-1:2021, [subclause/Annex], applies.”;

© ISO 2024 – All rights reserved

Documents
Document Sharing Hub
Full document details: BS EN ISO 19085-9:2024

— “ISO 19085-1:2021, [subclause/Annex], applies with the following additions.” or “ISO 19085-1:2021, [subclause/Annex], applies with the following additions, subdivided into further specific subclauses.”;

— “ISO 19085-1:2021, [subclause/Annex], does not apply.”;

— “ISO 19085-1:2021, [subclause/Annex], is replaced by the following text.” or “ISO 19085-1:2021, [subclause/Annex], is replaced by the following text, subdivided into further specific subclauses.”.

Other subclauses and annexes specific to this document are indicated by the introductory sentence: “Subclause/Annex specific to this document.”.

© ISO 2024 – All rights reserved

Documents
Document Sharing Hub
Full document details: BS EN ISO 19085-9:2024

Documents
Document Sharing Hub

# Woodworking machines — Safety —

## Part 9:
## Circular saw benches (with and without sliding table)

## 1 Scope

This document specifies the safety requirements and measures for circular saw benches with or without sliding table or demountable power feed unit or both and capable of continuous production use, also known as “table saws” (in the USA), hereinafter referred to also as “machines”.

The machines are designed to cut solid wood and material with similar physical characteristics to wood (see ISO 19085-1:2021, 3.2).

This document deals with all significant hazards, hazardous situations and events as listed in Annex A relevant to the machines when operated, adjusted and maintained as intended and under the conditions foreseen by the manufacturer; reasonably foreseeable misuse has been considered too. Transport, assembly, dismantling, disabling and scrapping phases have also been taken into account.

This document is also applicable to machines fitted with one or more of the following devices or working units, whose hazards have been dealt with:

— device for the main saw blade and scoring saw blade to be raised and lowered through the table;

— device to tilt the main saw blade and scoring saw blade for angled cutting;

— device for scoring;

— device for grooving with milling tool with a width not exceeding 20 mm in one pass;

— demountable power feed unit;

— additional manually operated sliding table;

— powered workpiece clamping device.

This document does not apply to:

a) machines intended for outdoor use on building sites;

NOTE Building site saws (contractor saws) are covered by the requirements of ISO 19085-10:2018.

b) handheld woodworking machines including any adaptation permitting their use in a different mode, i.e. bench mounting;

c) machines intended for use in a potentially explosive atmosphere;

d) machines manufactured prior to the publication of this document.

## 2 Normative references

The following documents are referred to in the text in such a way that some or all of their content constitutes requirements of this document. For dated references, only the edition cited applies. For undated references, the latest edition of the referenced document (including any amendments) applies.

© ISO 2024 – All rights reserved

Documents
Document Sharing Hub
Full document details: BS EN ISO 19085-9:2024

ISO 12100:2010, *Safety of machinery — General principles for design — Risk assessment and risk reduction*

ISO 13857:2019, *Safety of machinery — Safety distances to prevent hazard zones being reached by upper and lower limbs*

ISO 19085-1:2021, *Woodworking machines — Safety — Part 1: Common requirements*

EN 847-1:2017, *Tools for woodworking — Safety requirements — Part 1: Milling tools, circular saw blades*

## 3 Terms and definitions

For the purposes of this document, the terms and definitions given in ISO 12100:2010, ISO 19085-1:2021 and the following apply.

ISO and IEC maintain terminology databases for use in standardization at the following addresses:

— ISO Online browsing platform: available at https://www.iso.org/obp

— IEC Electropedia: available at https://www.electropedia.org/

**3.1**
**circular saw bench**
**table saw**
hand-fed machine fitted with a single main circular saw blade which is fixed in position during the cutting operation and a horizontal table fixed during operation all around the saw blade

Note 1 to entry: The main parts and their terminology are shown in Figure 1.

Note 2 to entry: The main saw blade is mounted on a spindle below the table.

Note 3 to entry: Circular saw benches are mainly used for ripping, cross cutting, dimensioning and grooving.

**3.2**
**grooving**
making of a cut in the surface of the workpiece not deep enough to pass through, using the saw blade or a milling tool

**3.3**
**initiation control**
control which, after actuation, enables the provision of power to specific machine actuators, for example, by a programmable logic control

© ISO 2024 – All rights reserved


Documents
Document Sharing Hub
Full document details: BS EN ISO 19085-9:2024

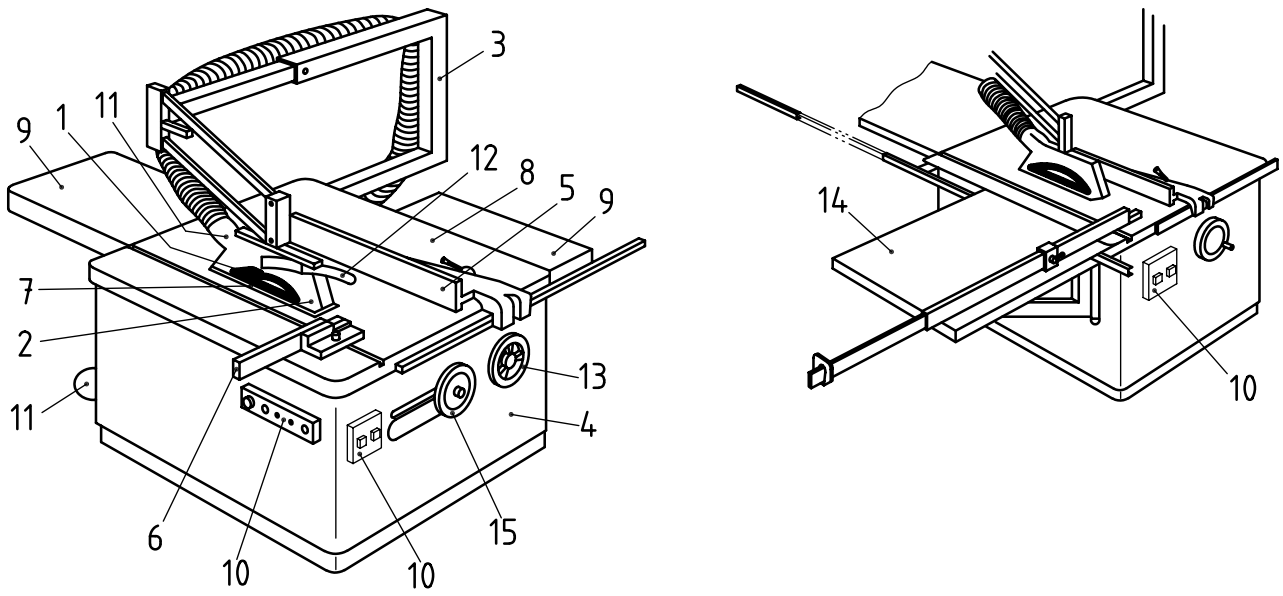


**a) Saw bench** **b) Saw bench with sliding table**

**Key**

1 riving knife
2 saw blade guard
3 saw blade guard support
4 fixed guard beneath table
5 rip fence
6 cross-cut fence
7 table insert
8 machine table
9 extension table
10 controls
11 chips and dust outlet
12 push stick in holding position
13 cutting height adjustment
14 sliding table
15 inclination adjustment

**Figure 1 — Examples of a circular saw bench**

# 4 Safety requirements and measures for controls

## 4.1 Safety and reliability of control systems

ISO 19085-1:2021, 4.1 applies with the following additions.

Table B.1 summarizes the performance levels required ($PL_r$) in Clauses 4 and 5 for each safety function.

## 4.2 Control devices

ISO 19085-1:2021, 4.2 applies with the following additions.

The electrical control devices except the main switch shall be located:

a) for machines designed to be used without a sliding table, either

   1) in the shaded area marked X or in the shaded area marked Y in Figure 2, or

   2) on a movable control panel;

b) for machines equipped with a sliding table or where provision is made for the use of a sliding table, either

   1) in the shaded area marked Y in Figure 2, or

© ISO 2024 – All rights reserved

Documents
Document Sharing Hub
Full document details: BS EN ISO 19085-9:2024

2) on a movable control panel.

A normal stop control device shall be located adjacent to each start control device.

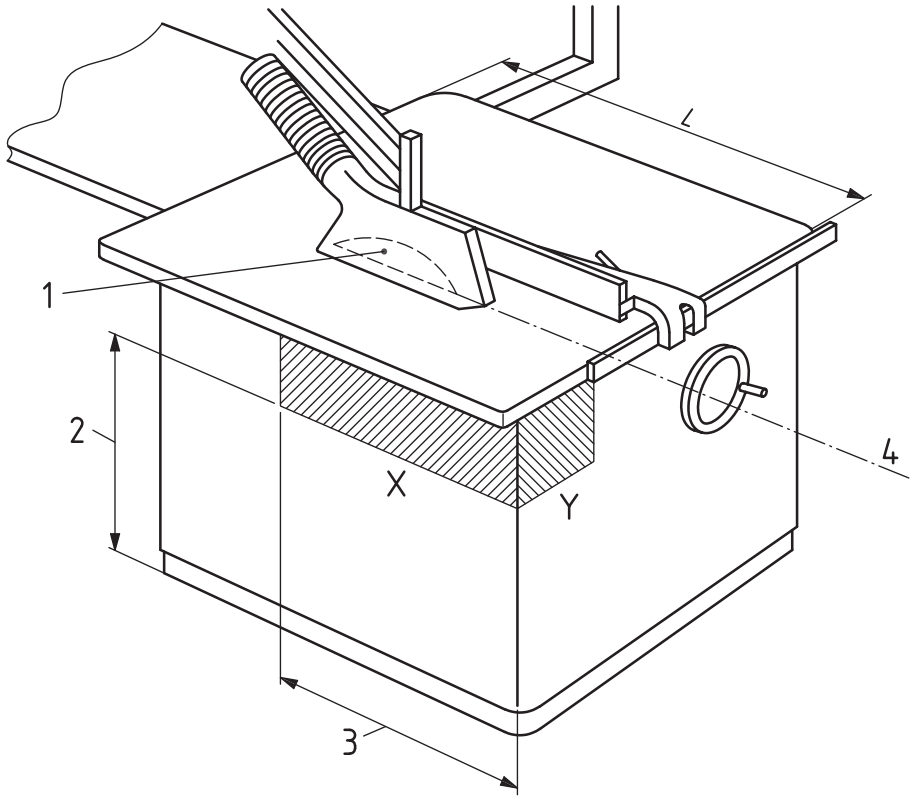


**Key**

| | | | |
|---|---|---|---|
| X | left side controls area | 3 | ≤½ *L* |
| Y | front side controls area (on the left of cutting line) | 4 | cutting line |
| 1 | saw blade | *L* | length of machine table |
| 2 | ≥600 mm | | |

**Figure 2 — Position of control devices**

The shaded areas X and Y are located below the table at a distance of at least 50 mm from the table top and more than 600 mm above the floor (see Figure 2 Key 1), and:

— on the left side of the machine (area X) and extending not more than half of the table length, *L* (see Figure 2 Key 2);

— on the front side of the machine (area Y) on the left of the cutting line.

The movable control panel fixed to the machine shall be located so that:

— its front face is at a distance from the front edge of the table not exceeding 700 mm;

— its upper edge is at a distance from the floor level not exceeding 1 800 mm.

## 4.3 Start

### 4.3.1 Direct start

ISO 19085-1:2021, 4.3.1 applies with the following additions.

The scoring saw blade drive shall not be capable of being started before the main saw blade drive.

© ISO 2024 – All rights reserved

Documents
Document Sharing Hub
Full document details: BS EN ISO 19085-9:2024