BRITISH STANDARD

BS EN ISO 19132:2008

Geographic information — Location-based services — Reference model (ISO 19132:2007)

ICS 35.240.70

NO COPYING WITHOUT BSI PERMISSION EXCEPT AS PERMITTED BY COPYRIGHT LAW

Document Sharing Hub
British Standards

Full document details: BS EN ISO 19132:2008

National foreword

This British Standard is the UK implementation of EN ISO 19132:2008. It is identical to ISO 19132:2007.

The UK participation in its preparation was entrusted to Technical Committee IST/36, Geographic information.

A list of organizations represented on this committee can be obtained on request to its secretary.

This publication does not purport to include all the necessary provisions of a contract. Users are responsible for its correct application.

Compliance with a British Standard cannot confer immunity from legal obligations.

This British Standard was published under the authority of the Standards Policy and Strategy Committee on 30 September 2008

© BSI 2008

ISBN 978 0 580 53460 7

Amendments/corrigenda issued since publication

Date	Comments

Documents
Document Sharing Hub

Full document details: BS EN ISO 19132:2008

EUROPEAN STANDARD

NORME EUROPÉENNE

EUROPÄISCHE NORM

EN ISO 19132

August 2008

ICS 35.240.70

English Version

Geographic information - Location-based services - Reference model (ISO 19132:2007)

Information géographique - Services basés sur la localisation - Modèle de référence (ISO 19132:2007)

Geoinformation - Standortbezogene Dienste - Referenzmodell (ISO 19132:2007)

This European Standard was approved by CEN on 15 August 2008.

CEN members are bound to comply with the CEN/CENELEC Internal Regulations which stipulate the conditions for giving this European Standard the status of a national standard without any alteration. Up-to-date lists and bibliographical references concerning such national standards may be obtained on application to the CEN Management Centre or to any CEN member.

This European Standard exists in three official versions (English, French, German). A version in any other language made by translation under the responsibility of a CEN member into its own language and notified to the CEN Management Centre has the same status as the official versions.

CEN members are the national standards bodies of Austria, Belgium, Bulgaria, Cyprus, Czech Republic, Denmark, Estonia, Finland, France, Germany, Greece, Hungary, Iceland, Ireland, Italy, Latvia, Lithuania, Luxembourg, Malta, Netherlands, Norway, Poland, Portugal, Romania, Slovakia, Slovenia, Spain, Sweden, Switzerland and United Kingdom.

EUROPEAN COMMITTEE FOR STANDARDIZATION
COMITÉ EUROPÉEN DE NORMALISATION
EUROPÄISCHES KOMITEE FÜR NORMUNG

Management Centre: rue de Stassart, 36 B-1050 Brussels

© 2008 CEN All rights of exploitation in any form and by any means reserved worldwide for CEN national Members.

Ref. No. EN ISO 19132:2008: E

Documents
Document Sharing Hub

Full document details: BS EN ISO 19132:2008

Foreword

The text of ISO 19132:2007 has been prepared by Technical Committee ISO/TC 211 “Geographic information/Geomatics” of the International Organization for Standardization (ISO) and has been taken over as EN ISO 19132:2008 by Technical Committee CEN/TC 287 “Geographic Information” the secretariat of which is held by NEN.

This European Standard shall be given the status of a national standard, either by publication of an identical text or by endorsement, at the latest by February 2009, and conflicting national standards shall be withdrawn at the latest by February 2009.

Attention is drawn to the possibility that some of the elements of this document may be the subject of patent rights. CEN [and/or CENELEC] shall not be held responsible for identifying any or all such patent rights.

According to the CEN/CENELEC Internal Regulations, the national standards organizations of the following countries are bound to implement this European Standard: Austria, Belgium, Bulgaria, Cyprus, Czech Republic, Denmark, Estonia, Finland, France, Germany, Greece, Hungary, Iceland, Ireland, Italy, Latvia, Lithuania, Luxembourg, Malta, Netherlands, Norway, Poland, Portugal, Romania, Slovakia, Slovenia, Spain, Sweden, Switzerland and the United Kingdom.

Endorsement notice

The text of ISO 19132:2007 has been approved by CEN as a EN ISO 19132:2008 without any modification.

Documents
Document Sharing Hub

Full document details: BS EN ISO 19132:2008

Contents

Page

Foreword ... vii
Introduction ... viii
1 Scope ... 1
2 Conformance ... 2
3 Normative references ... 2
4 Terms and definitions ... 2
5 Symbols and abbreviated terms ... 11
5.1 Acronyms ... 11
5.2 UML Notation ... 13
5.3 Taxonomy of data and services — Mapping to RDF ... 13
6 ODP Viewpoints used ... 15
6.1 Enterprise specification ... 15
6.2 Information specification ... 15
6.3 Computational specification ... 15
7 Participation Model ... 15
7.1 Model overview – Package: ISO 19132 (this International Standard) ... 15
7.2 Package – LBS Participants ... 17
7.2.1 Scenarios and semantics ... 17
7.2.2 Type – LBS_Participant ... 19
7.2.3 Type – LBS_User ... 20
7.2.4 Type – LBS_ApplicationProvider ... 23
7.2.5 Type – LBS_DataProvider ... 24
7.2.6 Type – LBS_FeatureDataProvider ... 24
7.2.7 Type – LBS_ContentProvider ... 24
7.2.8 Type – LBS_SpatialContentProvider ... 24
7.2.9 Type – LBS_ServiceProvider ... 24
7.2.10 Type – LBS_ServiceBroker ... 25
7.2.11 Type – LBS_MobileDevice ... 25
7.2.12 Type – LBS_DataBroker – Class semantics ... 26
8 Service model ... 26
8.1 Package – LBS_Services ... 26
8.1.1 Package structure ... 26
8.1.2 Service taxonomy ... 27
8.2 Package – Basic Services ... 27
8.2.1 Package structure ... 27
8.2.2 Type – LBS_Tracking ... 28
8.2.3 Type – LBS_Routing ... 29
8.2.4 Type – LBS_Navigation ... 30
8.3 Package – Geomatics services ... 31
8.3.1 Package structure ... 31
8.3.2 Type – LBS_Location Transformation ... 32
8.3.3 Type – LBS_AddressParsing ... 34
8.3.4 Type – LBS_Geoparsing ... 34
8.3.5 Type – LBS_Gazetteer ... 35
8.3.6 Type – LBS_MapService ... 36
8.4 Package – Information Services ... 37
8.4.1 Package structure ... 37
8.4.2 Type – LBS_DataService ... 37

Documents
Document Sharing Hub

© ISO 2007 – All rights reserved

Full document details: BS EN ISO 19132:2008

8.4.3 Type – LBS_NetworkDataService – semantics ... 39
8.4.4 Type – LBS_EventSubscription ... 40
8.4.5 Type – LBS_MovingObjectManagement ... 41
8.5 Package – System management ... 41
8.5.1 Managing users and groups ... 41
8.5.2 Type – LBS_UserProfileService ... 41
8.5.3 Type – LBS_LocationTriggerControl ... 42
8.6 Package – Digital rights management ... 42
8.6.1 Digital rights management ... 42
8.6.2 Type – LBS_Resource ... 43
8.6.3 Type – LBS_License ... 43
8.6.4 Type – LBS_Right ... 43
8.6.5 Type – LBS_RightsCondition ... 44

9 Message Data Model ... 44
9.1 Semantics ... 44
9.2 Package – Message Data Types ... 44
9.2.1 Package structure ... 44
9.2.2 Type – LanguageSpecificCharacterString ... 45
9.2.3 Type – LBS_AccessInfo ... 46
9.2.4 Type – LBS_Accuracy – Class semantics ... 47
9.2.5 Type – LBS_Address ... 47
9.2.6 Type – LBS_CostFunction ... 47
9.2.7 Type – LBS_Data ... 48
9.2.8 Type – LBS_DataSource ... 48
9.2.9 Type – LBS_DisplayParameters ... 49
9.2.10 Type – LBS_EventInfo ... 50
9.2.11 Type – LBS_Instruction ... 50
9.2.12 Type – LBS_Location ... 51
9.2.13 Type – LBS_Maneuver ... 51
9.2.14 Type – LBS_MapFormat ... 52
9.2.15 Type – LBS_Notification ... 52
9.2.16 Type – LBS_Position ... 53
9.2.17 Type – LBS_Preference ... 53
9.2.18 Type – LBS_Route ... 54
9.2.19 Type – LBS_RouteConstraint ... 55
9.2.20 Type – LBS_RouteCriteria ... 55
9.2.21 Type – LBS_SecurityCertificate ... 56
9.2.22 Type – LBS_SymbolSet ... 57
9.2.23 Type – LBS_TrackingLocation ... 57
9.2.24 Type – LBS_Trigger ... 58
9.2.25 Type – LBS_UserID ... 58
9.2.26 Union – LBS_FeatureData ... 59
9.2.27 Union – LBS_GeometryChoice ... 59
9.2.28 Union – LBS_NamedLocation ... 60
9.2.29 Union – LBS_TrackTrigger ... 61

Annex A (normative) **Abstract test suite** ... 62

Annex B (informative) **Architecture** ... 66

Annex C (informative) **Scenarios** ... 69

Annex D (informative) **Standards development in LBS** ... 75

Annex E (informative) **Crosswalk between common terminology in ISO/TC 211 and ISO/TC 204** ... 77

Annex F (informative) **Use cases for location-based services** ... 87

Bibliography ... 91

© ISO 2007 – All rights reserved

Documents
Document Sharing Hub
Full document details: BS EN ISO 19132:2008

Figures

Figure 1 — Relation between LBS and GIS ... viii
Figure 2 — Simplified navigation service represented as an RDF graph ... 14
Figure 3 — Example of composition of services ... 14
Figure 4 — Overview of UML package structure ... 16
Figure 5 — Package dependencies to other ISO standards ... 17
Figure 6 — Roles of the Enterprise view ... 18
Figure 7 — Enterprise view communication channels as associations ... 19
Figure 8 — License associations for LBS_Participant ... 19
Figure 9 — LBS_User associations ... 20
Figure 10 — LBS_ApplicationProvider associations ... 24
Figure 11 — Service provider associations ... 25
Figure 12 — Service broker associations ... 25
Figure 13 — Mobile device associations ... 26
Figure 14 — Subpackages of LBS_Services ... 27
Figure 15 — Basic services ... 28
Figure 16 — Context Diagram: LBS_Tracking ... 29
Figure 17 — Context Diagram: LBS_Routing ... 30
Figure 18 — Context Diagram: LBS_Navigation ... 31
Figure 19 — Geomatics services ... 32
Figure 20 — Context Diagram: LBS_LocationTransformation ... 33
Figure 21 — Context Diagram: LBS_AddressParsing ... 34
Figure 22 — Context Diagram: LBS_Geoparsing ... 34
Figure 23 — Context Diagram: LBS_Gazetteer ... 35
Figure 24 — Context Diagram: LBS_MapService ... 37
Figure 25 — Information services ... 38
Figure 26 — Context Diagram: LBS_DataService ... 38
Figure 27 — Context Diagram: LBS_NetworkDataService ... 39
Figure 28 — Context Diagram: LBS_EventSubscription ... 40
Figure 29 — Context Diagram: LBS_MovingObjectManagement ... 41
Figure 30 — Context Diagram: LBS_UserProfileService ... 41
Figure 31 — Context Diagram: LBS_LocationTriggerControl ... 42
Figure 32 — Digital rights management types ... 43
Figure 33 — Message data types ... 45
Figure 34 — Context diagram: LanguageSpecificCharacterString ... 46
Figure 35 — Context diagram: LBS_AccessInfo ... 46
Figure 36 — Context Diagram: LBS_Accuracy ... 47
Figure 37 — Context Diagram: LBS_Address ... 47
Figure 38 — Context Diagram: LBS_CostFunction ... 47

Documents
Document Sharing Hub

© ISO 2007 – All rights reserved

Full document details: BS EN ISO 19132:2008

Figure 39 — Context Diagram: LBS_Data 48
Figure 40 — Context Diagram: LBS_DataSource 48
Figure 41 — Context Diagram: LBS_DisplayParameters 49
Figure 42 — Context Diagram: LBS_EventInfo 50
Figure 43 — Context Diagram: LBS_Instruction 51
Figure 44 — Context Diagram: LBS_Location 51
Figure 45 — Context Diagram: LBS_Maneuver 52
Figure 46 — Context Diagram: LBS_MapFormat 52
Figure 47 — Context Diagram: LBS_Notification 53
Figure 48 — Context Diagram: LBS_Position 53
Figure 49 — Context Diagram: LBS_Preference 54
Figure 50 — Context Diagram: LBS_Route 54
Figure 51 — Context Diagram: LBS_RouteConstraint 55
Figure 52 — Context Diagram: LBS_RouteCriteria 56
Figure 53 — Context Diagram: LBS_SecurityCertificate 57
Figure 54 — Context Diagram: LBS_SymbolSet 57
Figure 55 — Context Diagram: LBS_TrackingLocation 58
Figure 56 — Context Diagram: LBS_Trigger 58
Figure 57 — Context Diagram: LBS_UserID 59
Figure 58 — Context Diagram: LBS_FeatureData 59
Figure 59 — Context Diagram: LBS_GeometryChoice 60
Figure 60 — Context Diagram: LBS_NamedLocation 61
Figure 61 — Context Diagram: LBS_TrackTrigger 61
Figure B.1 — Conceptual architecture equating mobile and non-mobile services 66
Figure B.2 — LBS interface schema and tentative standardization items 67

Tables

Table B.1 — Elementary components of LBS 67
Table D.1 — Standards Development Organizations in LBS 75
Table E.1 — Data model terminology 79
Table E.2 — Mathematical terminology 80
Table E.3 — Geodetic terminology 81
Table E.4 — Geometric terminology 83
Table E.5 — World model (feature) terminology 84
Table E.6 — Functional definitions 85

© ISO 2007 – All rights reserved
Documents
Document Sharing Hub
Full document details: BS EN ISO 19132:2008

Foreword

ISO (the International Organization for Standardization) is a worldwide federation of national standards bodies (ISO member bodies). The work of preparing International Standards is normally carried out through ISO technical committees. Each member body interested in a subject for which a technical committee has been established has the right to be represented on that committee. International organizations, governmental and non-governmental, in liaison with ISO, also take part in the work. ISO collaborates closely with the International Electrotechnical Commission (IEC) on all matters of electrotechnical standardization.

International Standards are drafted in accordance with the rules given in the ISO/IEC Directives, Part 2.

The main task of technical committees is to prepare International Standards. Draft International Standards adopted by the technical committees are circulated to the member bodies for voting. Publication as an International Standard requires approval by at least 75 % of the member bodies casting a vote.

Attention is drawn to the possibility that some of the elements of this document may be the subject of patent rights. ISO shall not be held responsible for identifying any or all such patent rights.

ISO 19132 was prepared by Technical Committee ISO/TC 211, *Geographic information/Geomatics*.

© ISO 2007 – All rights reserved

Documents
Document Sharing Hub
Full document details: BS EN ISO 19132:2008

Introduction

This International Standard establishes a framework supporting the development of location-based services (LBS). LBS are software services whose request and response pattern or values depend upon the location of some number of things, either real or conceptual. For example, tracking and navigation as defined in ISO 19133 are both location-based. Emergency response services are location-based since the requested assistance is invariably for a location fairly near the requestor at the time of the request. Environmental monitoring and remediation is dependent on the location and motion or other continuous change of the polluting agents. Even yellow-page directory services are dependent on the location, or tentative future location, of the requestor in search of a convenient business location for the acquisition of specific goods or services, either near his current location or his planned route.

A reference model is a conceptual framework consisting of a set of system decisions, both architectural and policy, which construct the logical environment for a set of applications and processes within a specific domain. A framework contains or references a taxonomy of terms and an ontology that defines the target domain. A framework can contain or reference other frameworks for related application sets or design paradigms. An LBS framework may relate to a framework of geographic information services, since much of its activity is associated to manipulation of location representations and the use of location as a key to other services. Models for frameworks exist at a variety of levels of abstraction, each of which is a generalization of the more detailed model, and a specialization of the more general ones. At the highest level, the only entities are the frameworks representing their respective reference models. This is illustrated in Figure 1.

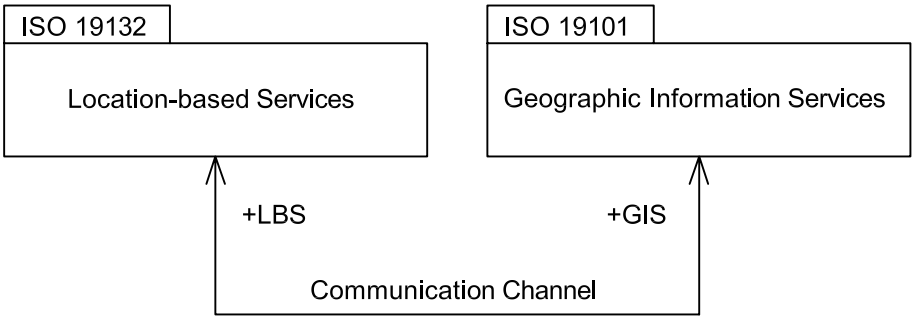

Figure 1 — Relation between LBS and GIS

What this says, in its simplest and most direct terms, is that the two frameworks are coupled and, depending on form more than on functionality, each will invoke services (functions) supplied by the other. This International Standard deals with the communication across the channel depicted in Figure 1. It does so by creating a reference model for the location-based services framework and linking it to the reference model defined in ISO 19101 and ISO/TS 19101-2.

A distinction between an LBS service [1)] and a GIS service [2)] is that LBS will normally have a larger granularity and significant non-spatial information component, and therefore is able to interact with both geographic data

1) The term “LBS” includes the word “service”, and so the phrase “LBS service” is logically redundant. When discussing LBSs in relation to other software components, the phrase “LBS service” can be used to maintain symmetry of expression. While logically inconsistent, this is grammatically and poetically acceptable.

2) It would be useful to redefine GIS as “geographic information service”, but past attempts to override the definition of “geographic information system” with “geographic information science” have not proven very fruitful. In this International Standard, all software components are viewed as services, and so mentions of “GIS” will be taken as “service implementation of GIS functionality”.

© ISO 2007 – All rights reserved
Documents
Document Sharing Hub
Full document details: BS EN ISO 19132:2008

frameworks and with general information frameworks containing non-spatial data. Such data may be spatially linked in manners not traditionally used in geographic systems, such as by postal address or telephone number. Another distinction is that LBS services have to deal with the delivery mechanism at a finer level than GIS frameworks. LBS clients are likely to include mobile devices on a multitude of network types, and with a wide variety of capabilities. Thus, an LBS framework supports the same services through a variety of different interface protocols, each tailored for a class of client needs and capabilities. While the details of each client device's interface protocols are beyond the scope of this International Standard, it does address the common semantics of all of the LBS client classes by defining a set of common patterns that provide extensible templates for applications within this domain.

Two of the annexes included in this International Standard are there to highlight the harmonization issue as the LBS domain develops. Organizations that develop standards in LBS need to be aware of other activities. Annex D lists some of the important standards development organizations. Annex E is a crosswalk between common terminology in the geographic information and the intelligent transport system domains. Crosswalks between common terminologies of differing domains are important for semantic interoperability. ITS is used only as an example of one crosswalk.

Documents
Document Sharing Hub

© ISO 2007 – All rights reserved

Full document details: BS EN ISO 19132:2008

Documents
Document Sharing Hub

Full document details: BS EN ISO 19132:2008

Geographic information — Location-based services — Reference model

1 Scope

This International Standard defines a reference model and a conceptual framework for location-based services (LBS), and describes the basic principles by which LBS applications may interoperate. This framework references or contains an ontology, a taxonomy, a set of design patterns and a core set of LBS service abstract specifications in UML. This International Standard further specifies the framework's relationship to other frameworks, applications and services for geographic information and to client applications.

This International Standard addresses, for an LBS system, the first three basic viewpoints as defined in the Reference Model for Open Distributed Processing (RM-ODP, see ISO/IEC 10746-1). These viewpoints are the

a) Enterprise Viewpoint – detailing the purpose, scope, and policies of the system,

b) Information Viewpoint – detailing the semantics of information and processing within the system,

c) Computational Viewpoint – detailing the functional decomposition of the system.

The fourth and fifth viewpoints are addressed only in requirements or examples. These are the

d) Engineering Viewpoint – detailing the infrastructure for distribution,

e) Technology Viewpoint – detailing the technology for implementation.

Reference models and frameworks can be defined at a variety of levels, from conceptual design to software documentation. This International Standard

— defines the conceptual framework for, and the type of applications included within, LBS,

— establishes general principles for LBS for both mobile and fixed clients,

— specifies the interface for data access while roaming,

— defines the architectural relationship with other ISO geographic information standards,

— identifies areas in which further standards for LBS are required.

This International Standard does not address the following issues:

— rules by which LBS are developed;

— general principles for roaming agreements for mobile clients and tracking targets.

© ISO 2007 – All rights reserved

Documents
Document Sharing Hub
Full document details: BS EN ISO 19132:2008

2 Conformance

Conformance to this International Standard takes on several meanings depending on the type of entity declaring conformance.

— **Semantic conformance** shall imply that the terminology used by the candidate corresponds explicitly to this International Standard where possible.

— **Data conformance** shall imply the usage of data types within application schemas or design specifications that are mappable into types in this International Standard, as in a UML realization of a type by a class.

— **Service conformance** shall imply both the consistent use of message-based request-response interfaces and data conformance for the message packages used by those interfaces.

Conformance may be claimed by a standard, a data structure or schema (such as an encoding definition) or a software module. In all cases, semantics and data conformance are possible. Service conformance is limited to either software or interface specification based on a service-oriented architecture. In service conformance, a data structure may claim this conformance only as part of a larger operational structure (such as the role of XML in SOAP-based SOA applications).

Details for conformance tests are given in Annex A.

3 Normative references

The following referenced documents are indispensable for the application of this document. For dated references, only the edition cited applies. For undated references, the latest edition of the referenced document (including any amendments) applies.

ISO 19107, *Geographic information — Spatial schema*

ISO 19109, *Geographic information — Rules for application schema*

ISO 19110, *Geographic information — Methodology for feature cataloguing*

ISO 19112, *Geographic information — Spatial referencing by geographic identifiers*

ISO 19133, *Geographic information — Location-based services — Tracking and navigation*

ISO 19136, *Geographic information — Geography Markup Language (GML)*

4 Terms and definitions

For the purposes of this document, the following terms and definitions apply.

4.1
active object
object which is capable of independent actions, and therefore capable of initiating interactions between itself and other objects without immediate prior external stimulation

cf. **passive object** (4.35)

NOTE An active object can represent a **user** or an active **service** that depends on internal (and therefore not visible) triggers to start actions. **Active** and **passive** states can exist for the same object, and such a service can transition between these two states depending on invocation of an activation or deactivation operation protocol.

© ISO 2007 – All rights reserved
Documents
Document Sharing Hub
Full document details: BS EN ISO 19132:2008

4.2
basic service
service providing a basic function to other services or applications in a functional manner

cf. **interoperate** (4.18)

NOTE **Basic services** lack any persistent, user-specific state information between invocations and are not meant for direct access by users. Because they act in a functional manner, they are readily replaceable at runtime by other **services** using the same interfaces.

4.3
candidate route
any route that satisfies all constraints of the routing request, with the possible exception of optimality of the cost function

[ISO 19133]

NOTE Navigation is the process of finding the candidate route that optimizes a chosen cost function.

4.4
cluster
collection of **targets** potentially heterogeneous (each satisfying a different query criteria) whose locations fall within a small neighbourhood

4.5
constraint
restriction on how a **link** or **turn** may be traversed by a **vehicle**, such as **vehicle** classification, or a physical or temporal constraint

[ISO 19133]

4.6
continuous change
change in an attribute whose type has a **distance measure** such that its value can be assumed to take on intermediate values between two known measurements

NOTE The interpolation of continuous change is usually done by taking into consideration constraints on the “curve” joining the two data points (time1, value1) and (time2, value2), looking at the value as a function of time. For example, if the continuous change is for the motion of a vehicle, then the constraints of physics and of the paths appropriate for that vehicle must be taken into consideration.

4.7
cost function
function that associates a measure (cost) to a **route**

[ISO 19133]

NOTE The normal mechanism is to apply a cost to each part of a route, and to define the total route cost as the sum of the cost of the parts. This is necessary for the operation of the most common navigation algorithms. The units of cost functions are not limited to monetary costs and values only, but include such measures as time, distance, and possibly others. The only requirement is that the function be additive and at least non-negative. This last criterion can be softened as long as not zero or less cost is associated to any loop in the network, as this will prevent the existence of a “minimal cost” route.

4.8
coupling
linkage of two or more software systems through information transfer or messaging

NOTE 1 Compare with **integration**. While the conceptual schema of the information transferred shall be agreed upon to some level, **coupling** applications can be and are usually flexible in the data representation of that information as long as the semantics content is correct and mappable to some canonical representation of the conceptual schema. The most

© ISO 2007 – All rights reserved

Documents
Document Sharing Hub
Full document details: BS EN ISO 19132:2008

common mapping technology used for XML messages is XSLT, and the transformation stylesheet can be supplied either by the service broker or by the service provider. It is considered a best practice for a service provider to supply his functionality through several logically equivalent messaging APIs, each represented by a different URI linked to an XSLT transformation bridge, and implemented by the same internal code.

NOTE 2 Loose coupling and tight coupling are not at present well-defined terms in the literature. Generally, "tight" coupling means that there is some sort of incurred dependency between requester and responder in the use of the interface, while "loose" means no such dependency. The nature of that dependency is not consistently defined between authors. In that light, "tight" coupling or "tight" integration are both bad practices, and have been viewed as such since the inception of the terms. Some literature refers to **integration** as "tight coupling", but that is a less accurate description.

4.9
digital item
structured digital object [asset, work, service, data or information] with a standard representation, identification and metadata framework

[ISO 21000-1]

4.10
discrete change
change in an attribute value such that it can be assumed to have changed without having taken intermediate values between two known measurements

NOTE Legal changes of parcel changes are discrete, having occurred at a specific time.

4.11
discrete spatiotemporal object
temporal sequence of object representations depicting the same spatial feature at different times

NOTE See Theodoridis, 1999 [31].

4.12
distance measure
distance metric
measure of the pairs of values of an attribute type that assigns a numeric value that is positive, symmetric and satisfies the triangular inequality

NOTE A measure "*d*" is positive if $d(x, y) > 0$ for every x, y where $x \neq y$ and $d(x,x) = 0$. A measure "*d*" is symmetric if $d(x, y) = d(y, x)$ for every x, y. A measure "*d*" satisfies the triangular inequality if $d(x, y) \leqslant d(x, a) + d(a, y)$ for every a, x and y. All numeric or vector valued attributes have such a metric, the most common being the Euclidean metric based on the square root of the sum of the squares of the differences in each dimension. Other non-Euclidean metrics take "curvature of space" into account (such as along the surface of the spheroid).

4.13
geocoding
translation of one form of location into another

[ISO 19133]

NOTE Geocoding usually refers to the translation of "address" or "intersection" to "direct position." Many service providers also include a "reverse geocoding" interface to their geocoder, thus extending the definition of the service as a general translator of location. Because routing services use internal location encodings not usually available to others, a geocoder is an integral part of the internals of such a service.

4.14
identity
data sufficient to identify an object over time, independent of its state

NOTE An **identity** is usually a persistent and constant key member attribute value of the **object**. Since it is temporally constant and unique, it will be the same in any **state** associated to the **object** regardless of its **timestamp**. A moving **object's identity** is independent of both time and **location**.

© ISO 2007 – All rights reserved
Documents
Document Sharing Hub
Full document details: BS EN ISO 19132:2008

4.15
instantiate
represent (an abstraction) by the creation of a concrete instance or to create the ability to create an instance

[ISO 19133]

NOTE A class or data element definition instantiates a type if it creates the ability to create objects or data elements respectively that can represent the concepts (instance data and/or operations) defined by that type. A class is instantiated by an object if the class defines that object's structure and function. A data schema is instantiated by a data element, if the data schema defines that element's structure.

4.16
integration
linkage of two or more software systems by the use of a common data and method base

cf. **coupling** (4.8)

NOTE **Integration** and **coupling** are the two major mechanisms for the interoperation of systems.

4.17
interoperability
capability to communicate, execute programs, or transfer data among various functional units in a manner that requires the user to have little or no knowledge of the unique characteristics of those units

[ISO/IEC 2382-1]

4.18
interoperate
communicate, execute programs, or transfer data among various functional units in a manner that requires the user to have little or no knowledge of the unique characteristics of those units

cf. **interoperability** (4.17)

4.19
junction
single topological node in a **network** with its associated collection of **turns** and incoming and outgoing **links**

[ISO 19133]

NOTE Junction is an alias for node.

4.20
license
permission or proof of permission granted to a system participant by a competent authority to exercise a **right** which would otherwise be disallowed or unlawful

4.21
linear referencing system
linear positioning system (ISO 19116)
positioning system that measures distance from a reference point along a route (feature)

[ISO 19133]

NOTE The system includes the complete set of procedures for determining and retaining a record of specific points along a linear feature, such as the location reference method(s) together with the procedures for storing, maintaining, and retrieving location information about points and segments on the highways. See *NCHRP Synthesis 21*, 1974 [25].

© ISO 2007 – All rights reserved

Documents
Document Sharing Hub
Full document details: BS EN ISO 19132:2008

4.22
link
directed topological connection between two nodes (**junctions**), consisting of an edge and a direction

[ISO 19133]

NOTE Link is an alias for directed edge.

4.23
link position
position within a network on a **link** defined by some strictly monotonic measure associated with that **link**

[ISO 19133]

NOTE Link positions are often associated to a target feature that is not part of the network. The most common link measures used for this are the distance from start node or address. The most common use of a link position is to geolocate an "address."

4.24
location
identifiable geographic place

[ISO 19112]

NOTE A location is represented by one of a set of data types that describe a **position**, along with metadata about that data, including coordinates (from a coordinate reference system), a measure (from a **linear referencing system**), or an address (from an address system).

4.25
location-based service
LBS
service whose return or other property is dependent on the **location** of the client requesting the service or of some other thing, object or person

[ISO 19133]

NOTE Queries like "find the nearest restaurant" depend on the location of the questioner and are thus appropriate for an LBS.

4.26
location-dependent service
LDS
service whose availability is dependent upon the **location** of the client

[ISO 19133]

NOTE It is often the case that the supplier of information or services may wish to restrict their usage to particular places. For example, Emergency Services request are often routed through the local supplier to ensure jurisdiction or prompt timing. In another common case, cell phones "roam" among providers of local services dependent on which "cell" they are currently in. Such roaming capability can be applied to any essentially "local" service.

4.27
loosely coupled interface
message-based service interface based on a common taxonomic definition and independent of the particulars of message format or representation and of the internal implementation of the service

cf. **coupling** (4.8)

© ISO 2007 – All rights reserved
Documents
Document Sharing Hub
Full document details: BS EN ISO 19132:2008

4.28
main-road rule
set of criteria used at a turn in lieu of a **route instruction**; default instruction used at a **node**

[ISO 19133]

NOTE This rule represents what is “most natural” to do at a node (intersection), given the entry link used. The most common version is “as straight as possible”, or to exit a turn on the most obvious extension of the entry street, which is usually, but not always, the same named street that was the entry. Every node in a route is either associated to an instruction or can be navigated by the main-road rule.

4.29
maneuver US
manœuvre GB
collection of related **links** and turns used in a **route** in combination

[ISO 19133]

NOTE Maneuvers are used to cluster turns into convenient and legal combinations. They can be as simple as a single turn, a combination of quick turns (“jogs” in the American mid-west, consisting of a turn followed immediately by a turn in the opposite direction) or very complex combinations consisting of entry, exit, and connecting roadways (“magic roundabouts” in the UK).

4.30
motion
change in the **position** of an object over time, represented by change of coordinate values with respect to a particular reference frame

[ISO 19116]

4.31
navigation
combination of **routing**, **route traversal** and **tracking**

[ISO 19133]

NOTE This is essentially the common term “navigation”, but the definition decomposes the process in terms used in the packages defined in this International Standard.

4.32
neighbourhood
geometric set containing a specified direct position in its interior, and containing all direct positions within a specified distance of the specified direct position

[ISO 19107]

4.33
network
abstract structure consisting of a set of 0-dimensional objects called **junctions**, and a set of 1-dimensional objects called **links** that connect the **junctions**, each **link** being associated with a start (origin, source) **junction** and end (destination, sink) **junction**

[ISO 19133]

NOTE The **network** is essentially the universe of discourse for the **navigation** problem. **Networks** are a variety of 1-dimensional topological complex. In this light, junction and topological node are synonyms, as are **link** and directed edge. The two sets of terms come from graph theory and topology, in the field of mathematics. The two fields are logically related but have historically separate roots. Graph theory deals mainly with the algebra of abstract graphs, while topology has it roots in the geometry or network representations. It is beyond the scope and capability of any International Standard to change 150 years of mathematical literature.

© ISO 2007 – All rights reserved

Documents
Document Sharing Hub
Full document details: BS EN ISO 19132:2008

4.34
passive tracking
tracking dependent on stationary sensors external to the **vehicle** or **traveller** allowing for measurements of location when the vehicle's or traveller's **tracking device** passes through the range of external sensors of known position

4.35
passive object
object which can only react to external stimulation and cannot initiate actions on its own

NOTE A **passive object** is usually accessed through an external interface, through which it receives requests, processes those requests and returns data as a response to that request. Since objects can implement more than one type, it is possible for a single object to pass through active and passive states. For example, a tracking service can lie dormant until a tracking request activates a period where the internals of the object initiate tracking activities based on internal triggers as specified within the request. When the tracking request is deactivated, the object may return to a passive state.

4.36
position
data type that describes a point or geometry potentially occupied by an object or person

[ISO 19133]

NOTE A direct position is a semantic subtype of **position**. Direct positions as described can only define a point and therefore not all positions can be represented by a direct position. That is consistent with the “is a type of” relation. An ISO 19107 geometry is also a position, just not a direct position.

4.37
resource
⟨ICT⟩ digital item controlled by a system participant

4.38
right
action, activity or class of actions that a system participant may perform on or using an associated **resource**

4.39
rights management
control, management, allocation and tracking of the **rights** granted to system participants

4.40
route
sequence of **links**, and/or partial **links**, that describe a path, usually between two **positions** within a **network**

[ISO 19133]

4.41
route instruction
information needed at a point along a **route** in a **network** that allows that **route** to be traversed

[ISO 19133]

NOTE To minimize the number of **instructions** needed to complete a **route traversal**, a default instruction can be assumed at **junctions** without specifically associated **instructions**. This default is called the **main-road rule**.

4.42
route traversal
process of following a **route**

[ISO 19133]

© ISO 2007 – All rights reserved
Documents
Document Sharing Hub
Full document details: BS EN ISO 19132:2008

4.43
routing
finding of optimal (minimal **cost function**) **routes** between **locations** in a **network**

[ISO 19133]

4.44
segment
point or polygon from a set

4.45
service
distinct part of the functionality that is provided by an entity through interfaces

[ISO/IEC TR 14252]

NOTE An equivalent definition is "**coupled** software process based on a functional call, invoked by a request and returning a response". **Services** are often incorrectly defined by the mechanism used for invocation. Under this definition any functional programming mechanism is viable as a server architecture.

4.46
service broker
application that combines or offers lower-level services for specific **user** needs

4.47
service-oriented architecture
SOA
software architecture consisting of coupled services

NOTE The most common SOAs in use today are Web services (using SOAP, UDDI, and WSDL), CORBA and DCOM.

4.48
slope
rate of change of elevation with respect to curve length

[ISO 19133]

4.49
spacestamp
value of a spatial attribute of an **object** at a given time, at which time the **object's state** is measured and recorded

NOTE See **timestamp** (4.53).

4.50
state
⟨of an object⟩ persistent data object reflecting the internal values of all the member attributes or measurable descriptions of a object at a given time

NOTE **State** is usually associated to an **object** by its **identity** and to a time by a **timestamp**.

4.51
target
object or person subject to being located

NOTE There is little logical difference between **traveller** (4.56) and **target** except that the former is normally used for a moving object which is being tracked, and the latter is used for either an object that is not moving, or an object for which a location is needed only once. A **traveller** is the subject of a **tracking** service; a **target** is the subject of a **locating** service. Since this International Standard does not make a distinction between the protocols for these logically similar

© ISO 2007 – All rights reserved

Documents
Document Sharing Hub
Full document details: BS EN ISO 19132:2008

services, but does need to differentiate between the two concepts, both terms will be used as appropriate to the underlying semantics of the situation. Since all of these terms refer to entities represented by **objects** within the system, they can be combined with adjectives defined for **objects**. So, an **active target** (a target represented by an **active object**) can be used to represent a moving object, since the act of motion is modifying the **target's** internal state and is therefore initiating actions.

4.52
temporal sequence
ordered sequence of **timestamps** associated to a sequence of representations of the same object

NOTE Temporal sequences are not assumed to be evenly spaced in time, nor equidistant in space. For discrete change, the default logic is to sample at temporal points of change if possible, so that the timestamp is the first temporal instance where the attributes listed have taken on that combination of values. For the sake of space savings, some samples in a sequence only list those values that have changed since the immediately preceding temporal sample. For this reason, a sample should only be considered in the context of its containing sequence. For rigid motions (such as vehicle tracking), only centroid (a point value) and orientation (direction of travel) are needed for a temporal sequence describing location and spatial extent. A motion in combination with an object deformation would require more information.

4.53
timestamp
value of time at which an object's state is measured and recorded

4.54
tracking
monitoring and reporting the **location** of a **vehicle**

[ISO 19133]

NOTE A tracking system is usually thought of as following a vehicle, giving a sequence of locations, but the same semantics are involved in finding and giving the location of something once. Therefore, this International Standard does not make a distinction in the protocol for tracking a vehicle and locating a target.

4.55
tracking device
device (tag) carried by a **vehicle** to allow it to determine its location or to be sensed by external objects of known location

NOTE 1 The most common tracking devices are cell phones, GNSS chips, RFID (Radio Frequency ID) tags, or printed tags which are scannable by optical sensors such as “bar codes”.

NOTE 2 The common usage of “vehicle” means a “form of conveyance” or, more simply “thing that conveys (carries) something else”. Thus, a tracked object that carries a **tracking device** to allow it to be tracked is, by definition, a conveyance or **vehicle** for that device. Thus, a cell phone that carries a GNSS device is the vehicle for that device, and the **traveller** carrying the cell phone, allowing him to be tracked, is the **vehicle** for the phone and all of its internal electronics.

4.56
traveller
person subject to being navigated or tracked

cf. **vehicle** (4.59)

[ISO 19133]

4.57
turn
part of a **route** or **network** consisting of a **junction** location and an entry and exit **link** for that **junction**

[ISO 19133]

© ISO 2007 – All rights reserved
Documents
Document Sharing Hub
Full document details: BS EN ISO 19132:2008

4.58
user
active object that initiates service requests to the system

NOTE **Users** are usually objects that act as proxies for people accessing the functionality of the system.

4.59
vehicle
object subject to being navigated or tracked

cf. **traveller** (4.56)

[ISO 19133]

NOTE Includes pedestrians. See ISO 14825. In this International Standard, whenever either term is used, the other can be substituted without any change of intent.

4.60
vehicle classification
type of **vehicle**, based on the nature of its construction or intended purpose

[ISO 19133]

NOTE Classifications based on construction may include automobile, truck, bus, bicycle, etc. Classifications based on purpose can include taxi, emergency vehicle, etc. Vehicle classification can be used to determine the application of navigation constraints.

4.61
version (temporal)
complete representation of an object at a given instance in time

NOTE **Temporal versions** differ from samples in that a complete description is required. In this sense a **version** is a complete sample able to be considered outside the domain of the temporal sequence to which it may belong.

4.62
waypoint
location on the network that plays a role in choosing candidate routes potentially satisfying a routing request

[ISO 19133]

5 Symbols and abbreviated terms

5.1 Acronyms

3GPP	3rd Generation Partnership Program
API	Application Programming Interface
ARIB	Association of Radio Industries and Businesses
CALM	Continuous Air-interface Long and Medium range
CORBA	Common Object Request Broker Architecture
CRS	Coordinate Reference System
CSL	Conceptual Schema Language

© ISO 2007 – All rights reserved

Documents
Document Sharing Hub
Full document details: BS EN ISO 19132:2008

CTIA	Cellular Telecommunications Industry Association
CWTS	China Wireless Telecommunication Standard group
DCOM	Distributed Component Object Model
ECCMA	Electronic Commerce Code Management Association
EM	Electromagnetic
ETSI	European Telecommunications Standards Institute
FGDC	Federal Geographic Data Committee
GDF	Geographic Data Files
GI	Geographic Information
GML	Geography Markup Language
GNSS	Global Navigation Satellite Systems (formerly GPS — Global Positioning System)
G-XML	Geographic XML
IAEC	International Address Element Code
ICT	Information Communication Technology
IETF	Internet Engineering Task Force
LAN	Local Area Network
LBS	Location-based Service
LDS	Location Dependent Service
LIF	Location Interoperability Forum
LRM	Linear Referencing Method
LRS	Linear Reference System
MMS	Multimedia Messaging Services
OGC	Open Geospatial Consortium [name changed August 2004 from OpenGIS Consortium (now deprecated)]
OMA	Open Mobile Alliance
PDA	Personal Digital Assistant
POI	Point of Interest
RDF	Resource Description Format
RFID	Radio Frequency Identification
RM-ODP	Reference Model for Open Distributed Processing

Documents
Document Sharing Hub
© ISO 2007 – All rights reserved
Full document details: BS EN ISO 19132:2008

SDTS	Spatial Data Transfer Standard
SOAP	Simple Object Access Protocol
SVG	Scalable Vector Graphics
T1	Standards Committee T1 Telecommunications
TIA	Telecommunications Industry Association
TTA	Telecommunications Technology Association
TTC	Telecommunication Technology Committee
UDDI	Universal Description Discovery and Integration
UML	Unified Modeling Language
USNG	US National Grid
W3C	World Wide Web Consortium
WAP	Wireless Application Protocol
WIN	Wireless Intelligent Network
WSDL	Web Services Description Language
XML	Extensible Markup Language

5.2 UML Notation

The UML notation used in this International Standard is described in ISO/TS 19103, and differs from standard UML (ISO/IEC 19501) only in the existence and interpretation of some special stereotypes, in particular, “CodeList”, and “Union,” and looser restrictions on the use of “DataType”.

The term “context diagram”, used extensively in the naming of figures in this International Standard, means a diagram that illustrates the context of a specified central type. The context of a type includes, at least, the types of attributes, operations and association targets. This is the information most useful to the implementer of this central class. Other information on the type may be included if it illustrates the semantics of the central type.

5.3 Taxonomy of data and services — Mapping to RDF

This International Standard deals mainly with semantic information entities represented by data objects, and informational (persistently stored) or functional (calculated on demand) relationships between these entities. At the abstract modelling level, UML relationships between classifiers and associations between object instances represent informational relationships. Processing services that map between semantically related objects represent functional relationships.

Thus, the taxonomy that makes up this framework is representable as an RDF graph data model, see W3C [35]. The inclusion of members in classifiers, the relationships between classifiers, and the operations each represent an arc between subject and object (a “predicate”) in the RDF graph. A simplified instance of a navigation service invocation is given by an RDF graph such as in Figure 2. The darker-line predicate is functional, while the others are most likely informational.

© ISO 2007 – All rights reserved

Documents
Document Sharing Hub
Full document details: BS EN ISO 19132:2008

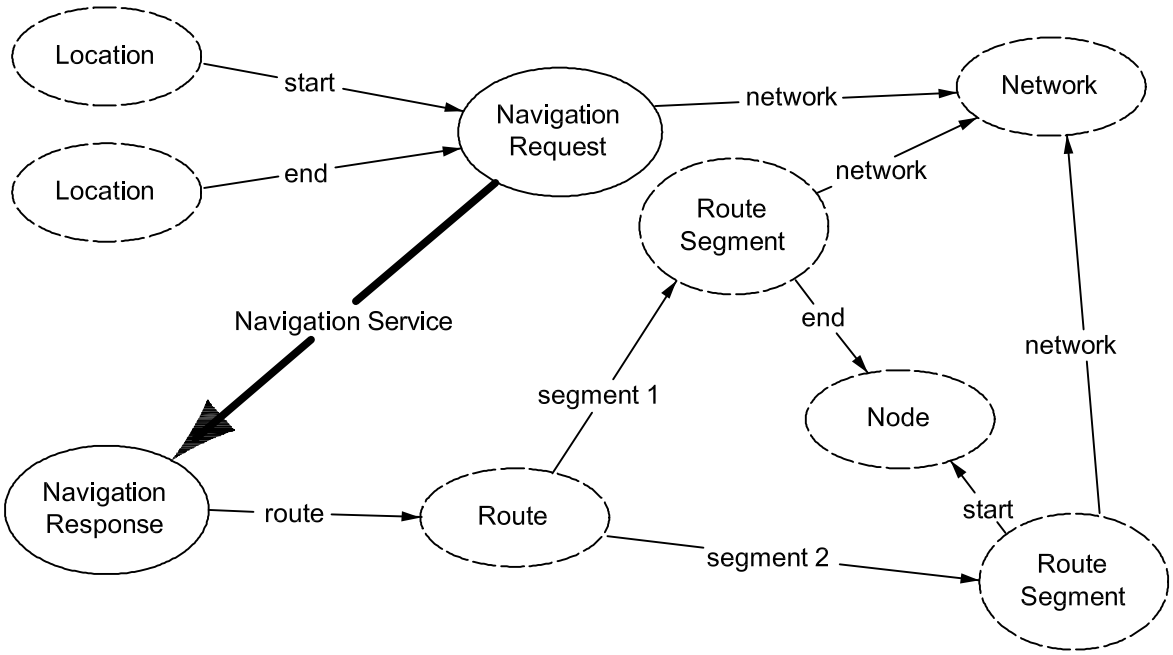

Figure 2 — Simplified navigation service represented as an RDF graph

A service often requires information in a particular format, or otherwise requires preprocessing of input. This results in a decomposition of the RDF graph into more primitive operations as shown in the example in Figure 3.

For the orchestration of simpler services into more complex ones, it would be necessary to match the user request to the input of appropriate services to eventually match the required output of the final services in the chain to the requirement of the user response. The service pattern in Figure 3 would be repeated whenever the location format of the user request did not match the location format of the underlying primitive, basic service.

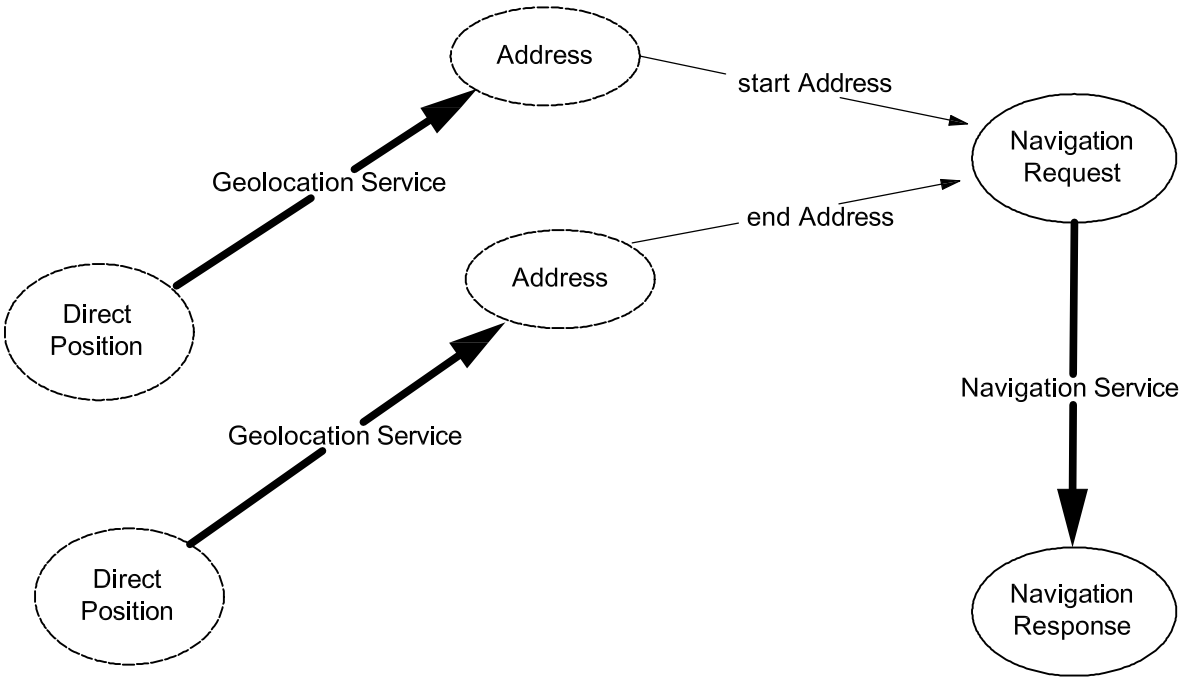

Figure 3 — Example of composition of services

© ISO 2007 – All rights reserved
Documents
Document Sharing Hub
Full document details: BS EN ISO 19132:2008

6 ODP Viewpoints used

6.1 Enterprise specification

The enterprise specification provides a description of the requirements and objectives that the environment imposes on the system (ISO/IEC 10746-1). The enterprise concepts of enterprise objects fulfilling roles of **performative** actions are used to describe the multiparty service orchestration inherent in the system concept described above. The roles that the stakeholders in location-based services can play with respect to a service are user, broker or provider. For the application and supporting service broker system, this specification results in the identification of consumer objects (**users**) and of objects managing these users through applications (**service brokers** and **application provider**). For the supporting network infrastructure, a **service provider** object manages the binding object.

6.2 Information specification

In the information specification, the semantics and requirements for the processing of the service information are specified. This is done using the UML schema definitions in the framework clauses of this International Standard (Clauses 8 and 9). Since the roles of the participants of the system vary in their view, distinct schemata may be required in some situations for user–broker and broker–service interactions.

6.3 Computational specification

The computational specification is a description of the system's functionality consistent with the enterprise and information specifications. This is done in the UML operation definitions in the framework clauses of this International Standard (Clauses 8 and 9). The correspondences between objects in the information specification and objects in the computational specification are specified in each case so that consistency between the specifications can be assured.

7 Participation Model

7.1 Model overview – Package: ISO 19132 (this International Standard)

The model supporting this International Standard consists of several packages describing the participants in the LBS community and the services and data employed by them. The package structure for this International Standard is detailed in Figure 4. The contents of the packages are described in the remainder of this clause for LBS Participants and in the following clauses for the packages LBS Services and Message Data Types.

© ISO 2007 – All rights reserved

Documents
Document Sharing Hub
Full document details: BS EN ISO 19132:2008

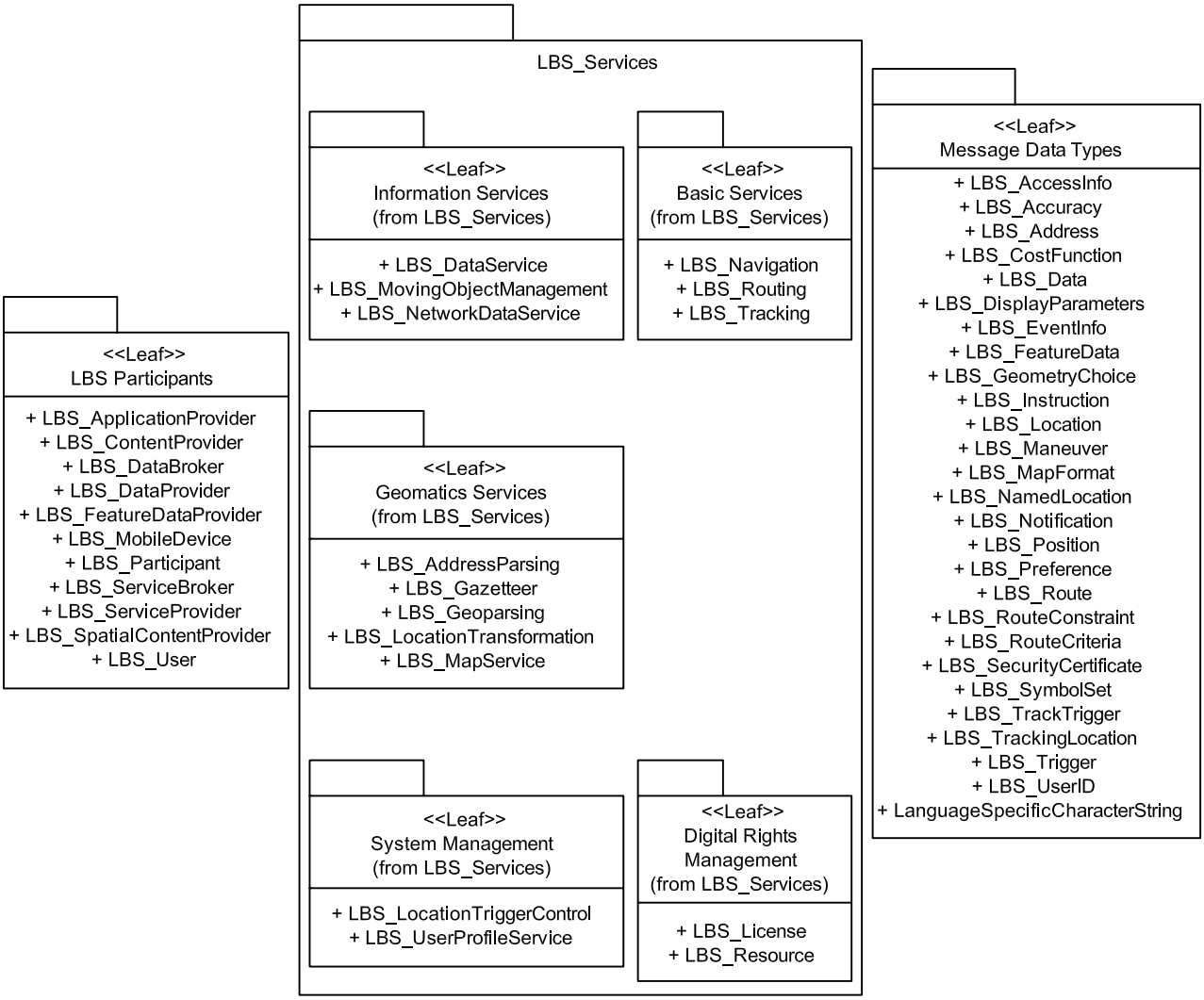

Figure 4 — Overview of UML package structure

© ISO 2007 – All rights reserved
Documents
Document Sharing Hub
Full document details: BS EN ISO 19132:2008

Figure 5 shows the dependencies of this package to models defined by other International Standards.

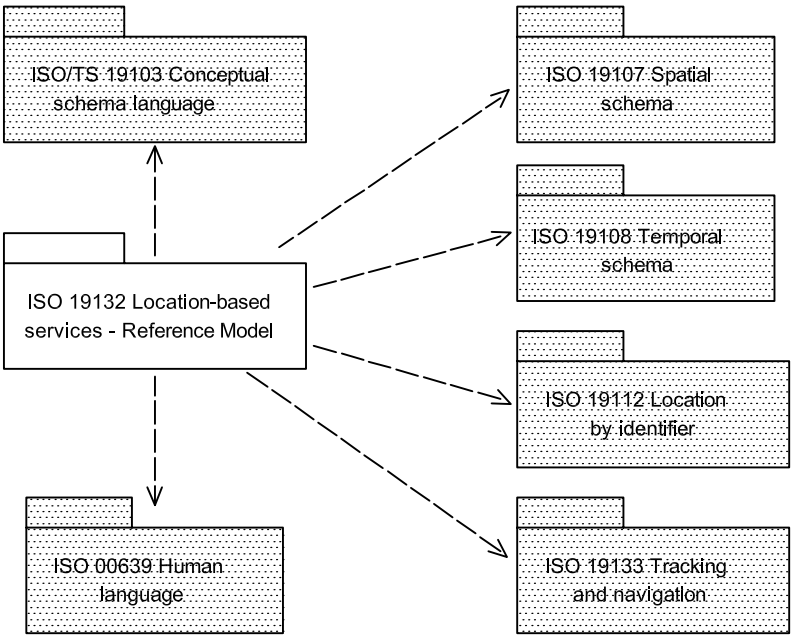

Figure 5 — Package dependencies to other ISO standards

7.2 Package – LBS Participants

7.2.1 Scenarios and semantics

Location-based services, while predominantly regarded as applications that service mobile clients, also encompass applications related to the changing spatial relationship of both fixed and mobile objects. As described in Annex C in greater detail, these sorts of scenarios can include the “pull” and “push” of location information related to people, natural disaster events, civil emergency events, and public transport and traffic vehicles. Whilst this list is not exhaustive, it does emphasise the range of services that an LBS framework (and architecture) needs to include.

In Figure 6, the types of Enterprise view participants are laid out. The potential and logically necessary multiple “role playing” of individual objects is reflected in the use of UML types and the subclassing between roles that allows each participant to play the role of any of its supertypes.

In Figure 7, the communication channels of the Enterprise view are modelled as associations. In using this diagram to understand the “calling tree” of a particular application, two types of graph manipulations can occur: folding and unfolding. If an application provider acts as its own service broker, then these two steps of the calling tree fold in on one another and the “service broker” association role essentially disappears. The same sort of folding can occur if the service provider acts as its own broker, eliminating the service provider association role from the instance diagram. If both occur and the application provider provides “in-house” solutions to the user, only the user and the application provider (role and instance) are directly visible in the calling tree.

© ISO 2007 – All rights reserved

Documents
Document Sharing Hub
Full document details: BS EN ISO 19132:2008

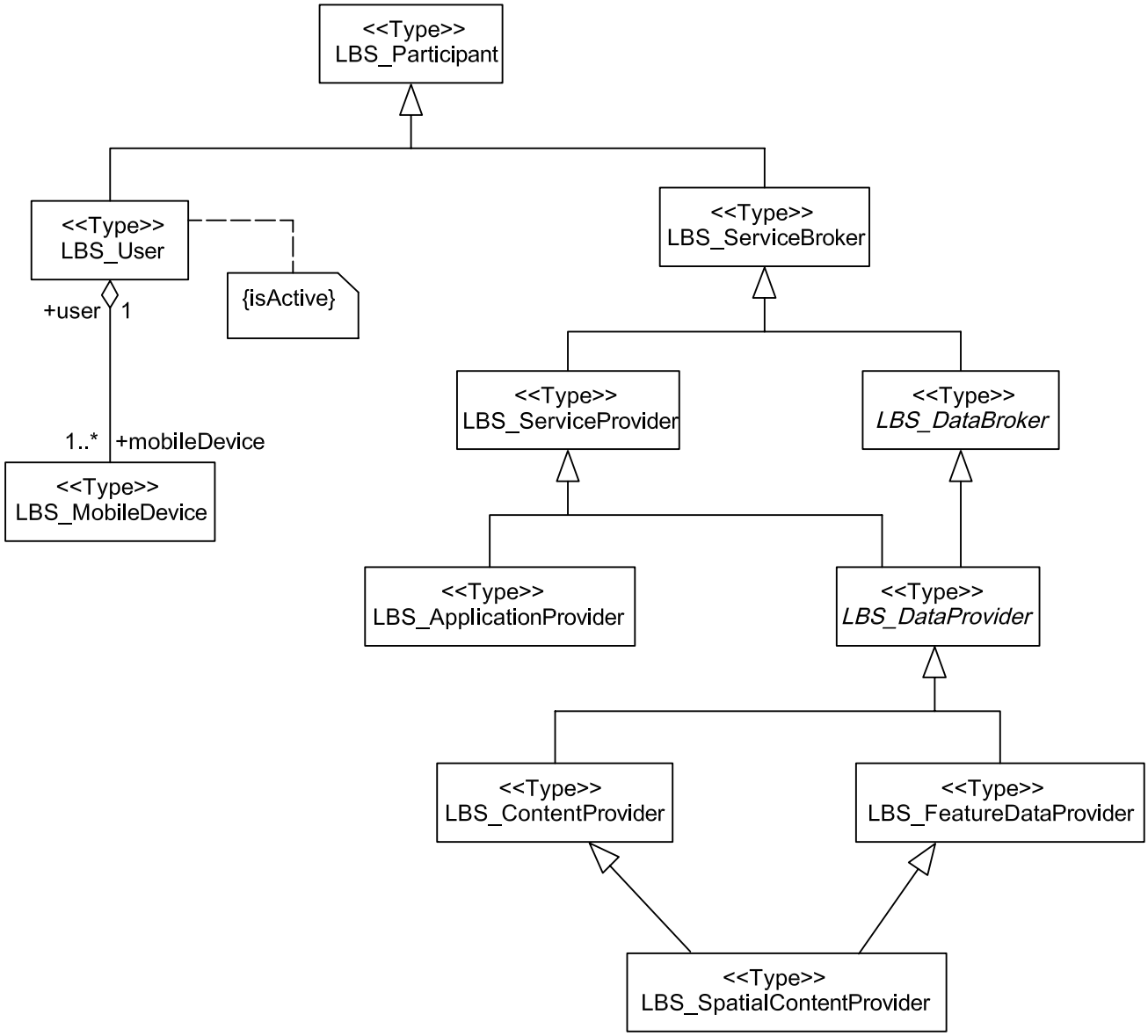

Figure 6 — Roles of the Enterprise view

The second sort of graph manipulation is seen when an object plays multiple roles for different services. If a broker binds multiple instances of services, then the service provider association from broker to service provider unfolds, giving us multiple instances of that type of link. Another sort of unfolding can occur when a service provider acts as a service broker for other service providers. This may provide a cascade of service-provider links in the calling tree. There are two separate but equally valid UML mechanisms to model the second unfolding: multiple inheritance and multiple instantiation. In multiple inheritance, a new classifier realizes both the service provider and service broker types for possibly different services. In languages such as Java, which do not support multiple inheritance, this can be accomplished in several different manners, but the most common is the use of interfaces. A Java class is capable of implementing multiple interfaces because these interfaces do not place multiple internal structural requirements on classes as is the case with multiple inheritance. Depending on the requirements of the implementation, this can be handled in many different ways.

In multiple instantiation, a single object acts correctly on different but unrelated operation protocols. This is quite common in internet services that can handle multiple types of service request “envelopes” using the same URI. Internally, there may be logic that delegates the tasks to appropriate internal objects, such as through a dispatch table that associates interface “events” to the appropriate “event handler”. This

© ISO 2007 – All rights reserved
Documents
Document Sharing Hub
Full document details: BS EN ISO 19132:2008

International Standard makes no requirement and its profiles shall make no requirement as to how a conformant implementation handles this issue.

This UML package models the participants described above. It contains classifiers for LBS_ApplicationProvider, LBS_SpatialContentProvider, LBS_FeatureDataProvider, LBS_ContentProvider, LBS_ServiceProvider, LBS_ServiceBroker, LBS_DataProvider, LBS_User, LBS_Participant, LBS_MobileDevice, and LBS_DataBroker.

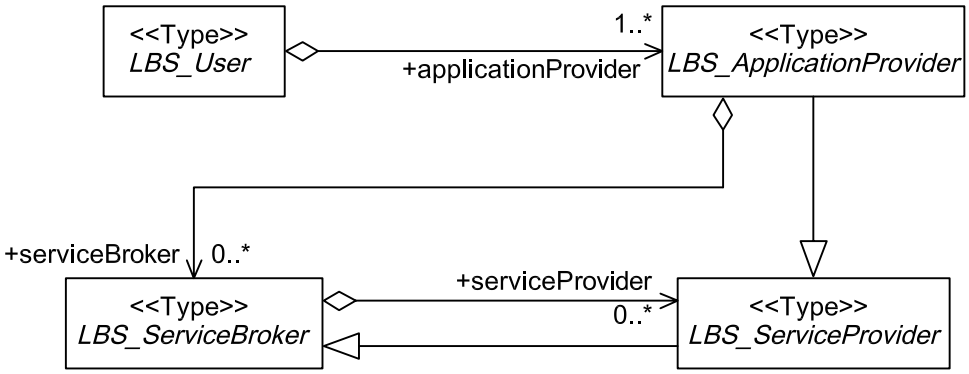

Figure 7 — Enterprise view communication channels as associations

Figures 6 and 7 provide a general overview of the participant model. Figure 7 delineates the major communication channel relationships, and Figure 6 shows the subtyping relationships between types. Both structures, together with the possibility of multiple instantiation (a concrete participant class implementing multiple interface types), support the wide variety of communication structures between client (user) and server (supplier) in potential LBS systems. These two diagrams supply sufficient information for the following type classifiers that usually negates the need for individual context diagrams.

Communication channel associations are unidirectional in order to correspond to the “request” direction of an operation or service invocation. Responses use the “return” information contained in the request, and therefore no continuous association is required.

7.2.2 Type – LBS_Participant

7.2.2.1 Class semantics

The participant class provides an abstract root for all of the members of the LBS community.

7.2.2.2 Association role – License

Participants use the license role to track rights granted to them by their associates, see Figure 8.

```
LBS_Participant::license[0..*]: LBS_License
```

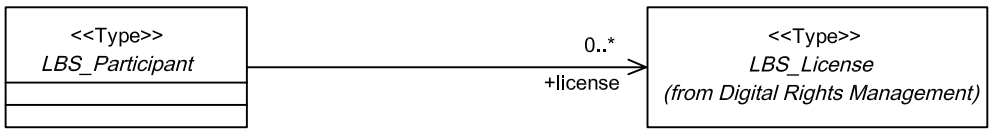

Figure 8 — License associations for LBS_Participant

© ISO 2007 – All rights reserved

Documents
Document Sharing Hub
Full document details: BS EN ISO 19132:2008

7.2.3 Type – LBS_User

7.2.3.1 User view of the system

7.2.3.1.1 Users

The **users** are the ultimate active objects in the model and initiate, directly or indirectly, all actions in the system, making informational requests, usually as a service request, to meet their personal needs through lightweight browser-based applications. As such, they are modelled in this International Standard as **active objects**.

The service requests are delivered through a network supported by the **application provider** (see Figure 9). This network is usually one running systems specific to the hardware. These application- and device-specific network providers supply many services directly to the user, and provide others by calling Internet service providers or brokers for location-based services and integrating that functionality with their applications in order to support user request. The application and network provider plays a pivotal role in the system since he is ultimately responsible for supporting the user and, in many cases may be the only provider for some key services. For example, for cell phones that are not equipped with GNSS systems, the network provider may be the only feasible supplier of tracking information necessary to support the location-based services being requested. Further, the application provider is the ultimate arbiter of supply, often making the choice of Internet service supplier based on location-dependent information driven by user location and preferences.

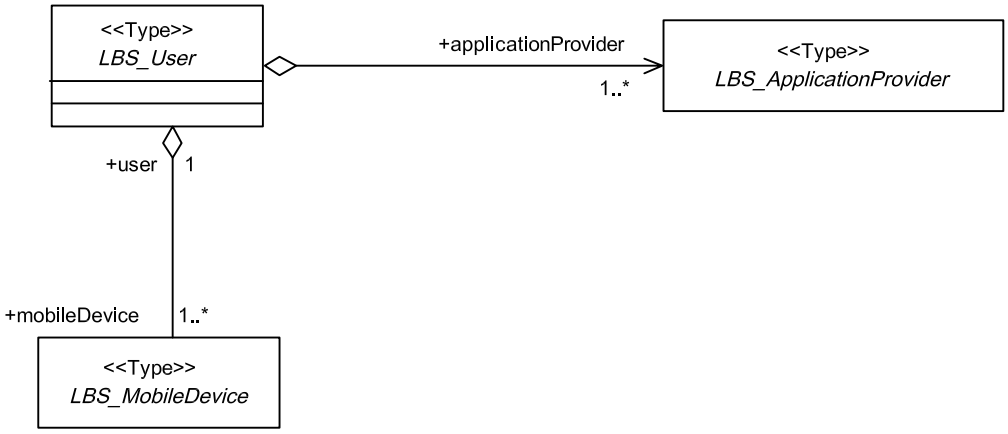

Figure 9 — LBS_User associations

7.2.3.1.2 Location-based services

7.2.3.1.2.1 Types of questions

In an environment in which things move or are movable, the answers to very simple questions change as the environment changes its spatial configuration. For example:

— Where am I?

— When will the next bus arrive?

— Where is the nearest restaurant with steak on the menu, which is open for lunch?

— Where are my car keys?

— What films are playing at nearby theatres?

— How do I turn off (on) the nearest light?

© ISO 2007 – All rights reserved
Documents
Document Sharing Hub
Full document details: BS EN ISO 19132:2008