BS EN ISO 20430:2020

BSI Standards Publication

Plastics and rubber machines — Injection moulding machines — Safety requirements

Documents
Document Sharing Hub

Full document details: BS EN ISO 20430:2020

National foreword

This British Standard is the UK implementation of EN ISO 20430:2020. It is identical to ISO 20430:2020. It supersedes BS EN 201:2009, which is withdrawn.

The UK participation in its preparation was entrusted to Technical Committee MCE/3/2, Rubber and plastics machine - Safety.

A list of organizations represented on this committee can be obtained on request to its committee manager.

This publication does not purport to include all the necessary provisions of a contract. Users are responsible for its correct application.

© The British Standards Institution 2020
Published by BSI Standards Limited 2020

ISBN 978 0 580 89020 8

ICS 83.200

Compliance with a British Standard cannot confer immunity from legal obligations.

This British Standard was published under the authority of the Standards Policy and Strategy Committee on 31 July 2020.

Amendments/corrigenda issued since publication

Date	Text affected

Documents
Document Sharing Hub

Full document details: BS EN ISO 20430:2020

EUROPEAN STANDARD

NORME EUROPÉENNE

EUROPÄISCHE NORM

EN ISO 20430

July 2020

ICS 83.200

Supersedes EN 201:2009

English Version

Plastics and rubber machines - Injection moulding machines - Safety requirements (ISO 20430:2020)

Machines pour les matières plastiques et le caoutchouc - Machines de moulage par injection - Prescription de sécurité (ISO 20430:2020)

Kunststoff- und Gummimaschinen - Spritzgießmaschinen - Sicherheitsanforderungen (ISO 20430:2020)

This European Standard was approved by CEN on 26 April 2020.

CEN members are bound to comply with the CEN/CENELEC Internal Regulations which stipulate the conditions for giving this European Standard the status of a national standard without any alteration. Up-to-date lists and bibliographical references concerning such national standards may be obtained on application to the CEN-CENELEC Management Centre or to any CEN member.

This European Standard exists in three official versions (English, French, German). A version in any other language made by translation under the responsibility of a CEN member into its own language and notified to the CEN-CENELEC Management Centre has the same status as the official versions.

CEN members are the national standards bodies of Austria, Belgium, Bulgaria, Croatia, Cyprus, Czech Republic, Denmark, Estonia, Finland, France, Germany, Greece, Hungary, Iceland, Ireland, Italy, Latvia, Lithuania, Luxembourg, Malta, Netherlands, Norway, Poland, Portugal, Republic of North Macedonia, Romania, Serbia, Slovakia, Slovenia, Spain, Sweden, Switzerland, Turkey and United Kingdom.

EUROPEAN COMMITTEE FOR STANDARDIZATION
COMITÉ EUROPÉEN DE NORMALISATION
EUROPÄISCHES KOMITEE FÜR NORMUNG

CEN-CENELEC Management Centre: Rue de la Science 23, B-1040 Brussels

© 2020 CEN All rights of exploitation in any form and by any means reserved worldwide for CEN national Members.

Ref. No. EN ISO 20430:2020 E

Documents
Document Sharing Hub

Full document details: BS EN ISO 20430:2020

European foreword

This document (EN ISO 20430:2020) has been prepared by Technical Committee ISO/TC 270 "Plastics and rubber machines" in collaboration with Technical Committee CEN/TC 145 “Plastics and rubber machines” the secretariat of which is held by UNI.

This European Standard shall be given the status of a national standard, either by publication of an identical text or by endorsement, at the latest by January 2021, and conflicting national standards shall be withdrawn at the latest by July 2022.

Attention is drawn to the possibility that some of the elements of this document may be the subject of patent rights. CEN shall not be held responsible for identifying any or all such patent rights.

This document supersedes EN 201:2009.

Compared with EN 201:2009, the following significant technical changes have been made:

— modification of the scope;

— cancellation of the safety requirements for magnetic clamping systems;

— cancellation of the safety requirements for other ancillary requirements;

— adaption of the normative references and referring to ISO standards;

— consideration of revised type-A and type-B standards;

— moving of the list of significant hazards to an informative annex;

— modification of the safety requirements and protective measures by taking into consideration the technological progress in the plastics and rubber industry and the continuous development of the safety technology;

— modification of all annexes;

— fundamental modification of the annexes specifying the protective types and addition of further examples of application;

— moving of the annex indicating the relationship between this European Standard and the Essential Requirements of EU Directive 2006/42/EC to informative Annex ZA;

— cancellation of the annex indicating the relationship between this European Standard and the Essential Requirements of EU Directive 98/37/EC.

This document has been prepared under a mandate given to CEN by the European Commission and the European Free Trade Association, and supports essential requirements of EU Directive(s).

For the relationship with EU Directive(s) see informative Annex ZA, which is an integral part of this document.

Documents
Document Sharing Hub

Full document details: BS EN ISO 20430:2020

According to the CEN-CENELEC Internal Regulations, the national standards organizations of the following countries are bound to implement this European Standard: Austria, Belgium, Bulgaria, Croatia, Cyprus, Czech Republic, Denmark, Estonia, Finland, France, Germany, Greece, Hungary, Iceland, Ireland, Italy, Latvia, Lithuania, Luxembourg, Malta, Netherlands, Norway, Poland, Portugal, Republic of North Macedonia, Romania, Serbia, Slovakia, Slovenia, Spain, Sweden, Switzerland, Turkey and the United Kingdom.

Endorsement notice

The text of ISO 20430:2020 has been approved by CEN as EN ISO 20430:2020 without any modification.

Documents
Document Sharing Hub

Full document details: BS EN ISO 20430:2020

Annex ZA
(informative)

Relationship between this European Standard and the essential requirements of Directive 2006/42/EC aimed to be covered

This European Standard has been prepared under a Commission's standardization request "M/396 Mandate to CEN and CENELEC for Standardisation in the field of Machinery" to provide one voluntary means of conforming to essential requirements of Directive 2006/42/EC of the European Parliament and the Council of 17 May 2006 on machinery, and amending Directive 95/16/EC (recast).

Once this standard is cited in the Official Journal of the European Union under that Directive, compliance with the normative clauses of this standard given in Table ZA.1 confers, within the limits of the scope of this standard, a presumption of conformity with the corresponding essential requirements of that Directive and associated EFTA regulations.

Table ZA.1 — Correspondence between this European Standard and Annex I of Directive 2006/42/EC

The relevant Essential Requirements of Directive 2006/42/EC (MD)	Clause(s)/subclause(s) of this EN	Remarks/Notes
1.1.2	4, 5, 6	
1.1.3	4.1, 4.8.2, 6.2.23	
1.2.1	4.1.1	
1.2.2	4.1.5, 4.2.1.3, 4.2.3.2, 4.2.7, 4.2.8, 4.8.10, Annex E, Annex F	
1.2.3	4.1.2, 4.2.4	
1.2.4.1	4.1.2.2	
1.2.4.2	4.1.2.2	
1.2.4.3	4.1.3	
1.2.5	4.2.3.2, 4.5.1, 4.6.1	
1.2.6	4.1.2.3, 4.8.10	
1.3.2	4.8.1, 4.8.2, 4.9.4	
1.3.3	4.5, 4.9.4, Annex H	
1.3.7	4.1.4, 4.1.5, 4.1.6, 4.1.7, 4.2, 4.3, 4.4, 4.5, 4.6, 4.7, 4.8.10, 4.9, Annex B, Annex C, Annex D, Annex E, Annex F	
1.3.8	4.1.4, 4.1.5, 4.1.6, 4.1.7, 4.2, 4.3, 4.4, 4.5, 4.6, 4.7, 4.8.10, 4.9, Annex B, Annex C, Annex D, Annex E, Annex F	

Documents
Document Sharing Hub

Full document details: BS EN ISO 20430:2020

The relevant Essential Requirements of Directive 2006/42/EC (MD)	Clause(s)/subclause(s) of this EN	Remarks/Notes
1.3.9	4.1.8, 4.2.6, 4.3.2, 4.3.3, Annex B, Annex C, Annex D, Annex E	
1.4	4.1.4, 4.1.5, 4.1.6, 4.1.7, 4.2, 4.3, 4.4, 4.5, 4.6, 4.7, 4.8.10, 4.9	
1.5.1	4.8.4	
1.5.3	4.8.9	
1.5.4	4.8.3	
1.5.5	4.2.5, 4.5, 4.6.2, 4.6.3, 4.8.5	
1.5.8	4.8.6, Annex I	
1.5.10	4.8.4	
1.5.11	4.8.4	
1.5.13	4.8.1, 4.8.2, 4.8.7	
1.5.14	4.2.7, 4.2.8	
1.5.15	4.8.8	
1.6.1	4.2.6, 4.3.2, 4.8.3, 4.8.8	
1.6.2	4.8.8	
1.6.3	4.1.1	
1.7.1	4.8.8, 6.1, 6.4, 6.5	
1.7.1.2	4.2.3.2, 4.8.11, 4.9.3, 4.9.4.3, 4.9.4.4, 6.5, Annex F, F.2	
1.7.2	4.2.3.2, 4.8.11, 6.4	
1.7.3	6.2.21, 6.3, Annex H	
1.7.4.1	6.1	
1.7.4.2	6.2, Annex I	
1.7.4.3	6.2.24, Annex I	

WARNING 1 — Presumption of conformity stays valid only as long as a reference to this European Standard is maintained in the list published in the Official Journal of the European Union. Users of this standard should consult frequently the latest list published in the Official Journal of the European Union.

WARNING 2 — Other Union legislation may be applicable to the product(s) falling within the scope of this standard.

Documents
Document Sharing Hub

Full document details: BS EN ISO 20430:2020

Contents

Page

Foreword ... **vi**

Introduction ... **vii**

1 Scope ... **1**

2 Normative references ... **1**

3 Terms, definitions and abbreviated terms ... **3**
3.1 Terms and definitions ... 3
3.2 Abbreviated terms ... 11

4 Safety requirements and/or protective/risk reduction measures ... **11**
4.1 Basic requirements ... 11
4.1.1 General ... 11
4.1.2 Start, stop and restart functions ... 11
4.1.3 Emergency stop ... 12
4.1.4 Guards ... 12
4.1.5 ESPE in the form of light curtains ... 15
4.1.6 Two-hand control devices ... 15
4.1.7 Pressure-sensitive mats, floors and edges ... 16
4.1.8 Requirements for automatic monitoring ... 16
4.1.9 Movements caused by gravity during production ... 17
4.2 Mould area ... 17
4.2.1 Hazards due to the closing movement of the platen during production ... 17
4.2.2 Hazards due to the closing movement of the platen on sides of the machine where a cycle cannot be initiated ... 19
4.2.3 Hazards due to movements other than the closing movement of the platen during production ... 20
4.2.4 Use of control guards ... 21
4.2.5 Thermal hazards ... 24
4.2.6 Additional safety requirements for machines with a downstroking platen ... 24
4.2.7 Additional requirements for machines where whole-body access is possible between the interlocking guard or light curtain for the mould area and the mould area itself ... 25
4.2.8 Additional requirements for machines where whole-body access to the mould area is possible ... 26
4.3 Clamping mechanism area or area behind the movable platen ... 28
4.3.1 Basic safety requirements ... 28
4.3.2 Additional safety requirements for machines with an upstroking platen ... 28
4.3.3 Additional requirements for machines with toggle systems ... 29
4.4 Area of movement of cores and ejectors and their drive mechanisms outside the mould and/or clamping mechanism areas ... 29
4.5 Nozzle area ... 29
4.5.1 Mechanical hazards ... 29
4.5.2 Thermal hazards ... 30
4.6 Injection unit area ... 30
4.6.1 Mechanical hazards ... 30
4.6.2 Thermal hazards ... 31
4.6.3 Mechanical and/or thermal hazards ... 32
4.7 Discharge area ... 32
4.8 Safety requirements and/or protective measures against hazards not associated with a particular area of the machine ... 33
4.8.1 Hazards due to flexible hoses ... 33
4.8.2 Release of fluids under pressure ... 33
4.8.3 Hazards during adjustment and maintenance ... 33
4.8.4 Electrical hazards and hazards due to electromagnetic interference ... 33
4.8.5 Thermal hazards ... 34

AVA Documents
Document Sharing Hub

© ISO 2020 – All rights reserved

Full document details: BS EN ISO 20430:2020

4.8.6 Hazards generated by noise ... 34
4.8.7 Hazards generated by gases, fumes and dusts ... 34
4.8.8 Slip, trip and fall hazards ... 35
4.8.9 Hydraulic and pneumatic systems ... 35
4.8.10 Power-operated guards ... 35
4.8.11 Hazards due to unintentionally interrupted forward movement of the screw/piston ... 35
4.9 Additional safety requirements and/or protective measures associated with specific machine design ... 36
4.9.1 Shuttle-table machines/machines with sliding table/platen and turn-table machines and carousel machines ... 36
4.9.2 Multi-station machines with mobile injection unit ... 36
4.9.3 Cellular foam injection moulding machines ... 36
4.9.4 Additional requirements for machines where the injection unit discharges towards the operating position ... 37

5 Verification of the safety requirements and/or protective measures ... 39

6 Information for use ... 41
6.1 General ... 41
6.2 Instruction handbook ... 42
6.2.1 General ... 42
6.2.2 Emergency stop ... 42
6.2.3 Overall system stopping performance ... 42
6.2.4 Stopping time ... 42
6.2.5 Light curtains ... 42
6.2.6 Moulds and extensions ... 42
6.2.7 Movements of cores and ejectors ... 42
6.2.8 Machines with toggle systems ... 43
6.2.9 Machines with a downstroking or upstroking platen ... 43
6.2.10 Thermal hazards in the mould area ... 43
6.2.11 Maintenance operations on machines with vertical clamping unit ... 43
6.2.12 Machines where whole-body access is possible ... 43
6.2.13 Presence detecting devices in the mould area ... 43
6.2.14 Injection unit ... 43
6.2.15 Machines where the injection unit discharges towards the operating position ... 44
6.2.16 Interrupted forward movement of the screw/piston ... 44
6.2.17 Flexible hose assemblies ... 44
6.2.18 Adjustment and maintenance ... 44
6.2.19 Exhaust system ... 44
6.2.20 Non-permanent safe means of access ... 44
6.2.21 Designated access and working positions ... 45
6.2.22 Cellular foam injection moulding ... 45
6.2.23 Cleaning of hydraulic system ... 45
6.2.24 Noise emission ... 45
6.2.25 Splashing hazards where two-hand control devices are used ... 45
6.3 Marking ... 45
6.4 Warning signs ... 46
6.5 Warning devices ... 46

Annex A (informative) **List of significant hazards ... 47**

Annex B (normative) **Protective Type I ... 55**

Annex C (normative) **Protective Type II ... 67**

Annex D (normative) **Protective Type III ... 81**

Annex E (normative) **Two-hand control device for the mould area ... 125**

Annex F (normative) **Acknowledgement system ... 136**

Annex G (normative) **Use of proportional valves for the platen movement ... 137**

© ISO 2020 – All rights reserved

Documents
Document Sharing Hub
Full document details: BS EN ISO 20430:2020

Annex H (informative) **Warning signs, prohibition signs and mandatory action signs** **138**
Annex I (normative) **Noise test code** **142**
Bibliography **148**

© ISO 2020 – All rights reserved

Documents
Document Sharing Hub
Full document details: BS EN ISO 20430:2020

Foreword

ISO (the International Organization for Standardization) is a worldwide federation of national standards bodies (ISO member bodies). The work of preparing International Standards is normally carried out through ISO technical committees. Each member body interested in a subject for which a technical committee has been established has the right to be represented on that committee. International organizations, governmental and non-governmental, in liaison with ISO, also take part in the work. ISO collaborates closely with the International Electrotechnical Commission (IEC) on all matters of electrotechnical standardization.

The procedures used to develop this document and those intended for its further maintenance are described in the ISO/IEC Directives, Part 1. In particular, the different approval criteria needed for the different types of ISO documents should be noted. This document was drafted in accordance with the editorial rules of the ISO/IEC Directives, Part 2 (see www.iso.org/directives).

Attention is drawn to the possibility that some of the elements of this document may be the subject of patent rights. ISO shall not be held responsible for identifying any or all such patent rights. Details of any patent rights identified during the development of the document will be in the Introduction and/or on the ISO list of patent declarations received (see www.iso.org/patents).

Any trade name used in this document is information given for the convenience of users and does not constitute an endorsement.

For an explanation of the voluntary nature of standards, the meaning of ISO specific terms and expressions related to conformity assessment, as well as information about ISO's adherence to the World Trade Organization (WTO) principles in the Technical Barriers to Trade (TBT) see www.iso.org/iso/foreword.html.

This document was prepared by Technical Committee ISO/TC 270, *Plastics and rubber machines*, in collaboration with the European Committee for Standardization (CEN) Technical Committee CEN/TC 145, *Plastics and rubber machines*, in accordance with the Agreement on technical cooperation between ISO and CEN (Vienna Agreement).

Any feedback or questions on this document should be directed to the user's national standards body. A complete listing of these bodies can be found at www.iso.org/members.html.

© ISO 2020 – All rights reserved
Documents
Document Sharing Hub
Full document details: BS EN ISO 20430:2020

Introduction

This document is a type-C standard as stated in ISO 12100:2010.

This document is of relevance, in particular, for the following stakeholder groups representing the market players with regard to machinery safety:

— machine manufacturers (small, medium and large enterprises);

— health and safety bodies (regulators, accident prevention organizations, market surveillance, etc.).

Others can be affected by the level of machinery safety achieved with the means of the document by the above-mentioned stakeholder groups:

— machine distributors, resellers, rebuilders and integrators;

— machine users/employers (small, medium and large enterprises);

— machine operators/employees (e.g. trade unions, organizations for people with special needs);

— service providers, e.g. for maintenance (small, medium and large enterprises).

The above-mentioned stakeholder groups have been given the possibility to participate in the drafting process of this document.

The machinery concerned and the extent to which hazards, hazardous situations or hazardous events are covered are indicated in the Scope of this document.

When requirements of this type-C standard are different from those which are stated in type-A or type-B standards, the requirements of this type-C standard take precedence over the requirements of the other standards for machines that have been designed and built according to the requirements of this type-C standard.

© ISO 2020 – All rights reserved

Documents
Document Sharing Hub
Full document details: BS EN ISO 20430:2020

Documents
Document Sharing Hub

Plastics and rubber machines — Injection moulding machines — Safety requirements

1 Scope

This document specifies the essential safety requirements for the design and construction of injection moulding machines for the processing of plastics and/or rubber and provides information for their safe use.

This document is applicable only to injection moulding machines with hydraulic and/or electrical drives for platen movement.

This document deals with all significant hazards, hazardous situations and events relevant to injection moulding machines, when they are used as intended and under conditions of misuse which are reasonably foreseeable by the manufacturer (see Annex A) during the life cycle of the machinery (see ISO 12100:2010, 5.4).

The following are not covered:

— machines on which the clamping unit can only be operated by the physical force of the operator;

— machines for which the hydraulic jack can only be manually operated;

— injection blow moulding machines;

— machines for reaction injection moulding;

— compression moulding machines and transfer moulding machines;

— direct-on sole moulding machines, unit sole and footwear component moulding machines, full shoe and boot moulding machines;

— design of an exhaust system;

— design and construction of the mould.

NOTE Moulds and exhaust systems are not part of the machinery.

This document is not applicable to injection moulding machines which are manufactured before the date of its publication.

2 Normative references

The following documents are referred to in the text in such a way that some or all of their content constitutes requirements of this document. For dated references, only the edition cited applies. For undated references, the latest edition of the referenced document (including any amendments) applies.

ISO 1402:2009, *Rubber and plastics hoses and hose assemblies — Hydrostatic testing*

ISO 3744:2010, *Acoustics — Determination of sound power levels and sound energy levels of noise sources using sound pressure — Engineering methods for an essentially free field over a reflecting plane*

ISO 3746:2010, *Acoustics — Determination of sound power levels and sound energy levels of noise sources using sound pressure — Survey method using an enveloping measurement surface over a reflecting plane*

ISO 3747:2010, *Acoustics — Determination of sound power levels and sound energy levels of noise sources using sound pressure — Engineering/survey methods for use in situ in a reverberant environment*

© ISO 2020 – All rights reserved

AVA Documents Document Sharing Hub
Full document details: BS EN ISO 20430:2020

ISO 4413:2010, *Hydraulic fluid power — General rules and safety requirements for systems and their components*

ISO 4414:2010, *Pneumatic fluid power — General rules and safety requirements for systems and their components*

ISO 4871:1996, *Acoustics — Declaration and verification of noise emission values of machinery and equipment*

ISO 7751:2016, *Rubber and plastics hoses and hose assemblies — Ratios of proof and burst pressure to maximum working pressure*

ISO 11201:2010, *Acoustics — Noise emitted by machinery and equipment — Determination of emission sound pressure levels at a work station and at other specified positions in an essentially free field over a reflecting plane with negligible environmental corrections*

ISO 11202:2010, *Acoustics — Noise emitted by machinery and equipment — Determination of emission sound pressure levels at a work station and at other specified positions applying approximate environmental corrections*

ISO 11204:2010, *Acoustics — Noise emitted by machinery and equipment — Determination of emission sound pressure levels at a work station and at other specified positions applying accurate environmental corrections*

ISO 12100:2010, *Safety of machinery — General principles for design — Risk assessment and risk reduction*

ISO 13732-1:2006, *Ergonomics of the thermal environment — Methods for the assessment of human responses to contact with surfaces — Part 1: Hot surfaces*

ISO 13849-1:2015, *Safety of machinery — Safety-related parts of control systems — Part 1: General principles for design*

ISO 13849-2:2012, *Safety of machinery — Safety-related parts of control systems — Part 2: Validation*

ISO 13850:2015, *Safety of machinery — Emergency stop function — Principles for design*

ISO 13851:2002, *Safety of machinery — Two-hand control devices — Functional aspects and design principles*

ISO 13855:2010, *Safety of machinery — Positioning of safeguards with respect to the approach speeds of parts of the human body*

ISO 13856-1:2013, *Safety of machinery — Pressure-sensitive protective devices — Part 1: General principles for design and testing of pressure-sensitive mats and pressure-sensitive floors*

ISO 13856-2:2013, *Safety of machinery — Pressure-sensitive protective devices — Part 2: General principles for design and testing of pressure-sensitive edges and pressure-sensitive bars*

ISO 13857:2008, *Safety of machinery — Safety distances to prevent hazard zones being reached by upper and lower limbs*

ISO 14118:2017, *Safety of machinery — Prevention of unexpected start-up*

ISO 14119:2013, *Safety of machinery — Interlocking devices associated with guards — Principles for design and selection*

ISO 14120:2015, *Safety of machinery — Guards — General requirements for the design and construction of fixed and movable guards*

ISO 14122-1:2016, *Safety of machinery — Permanent means of access to machinery — Part 1: Choice of fixed means and general requirements of access*

© ISO 2020 – All rights reserved
Documents
Document Sharing Hub
Full document details: BS EN ISO 20430:2020

ISO 14122-2:2016, *Safety of machinery — Permanent means of access to machinery — Part 2: Working platforms and walkways*

ISO 14122-3:2016, *Safety of machinery — Permanent means of access to machinery — Part 3: Stairs, stepladders and guard-rails*

ISO 14122-4:2016, *Safety of machinery — Permanent means of access to machinery — Part 4: Fixed ladders*

IEC 60204-1:2016, *Safety of machinery — Electrical equipment of machines — Part 1: General requirements*

IEC 60947-5-3:2013, *Low-voltage switchgear and controlgear — Part 5-3: Control circuit devices and switching elements — Requirements for proximity devices with defined behaviour under fault conditions (PDDB)*

IEC 61496-1:2012, *Safety of machinery — Electro-sensitive protective equipment — Part 1: General requirements and tests*

IEC 61496-2:2013, *Safety of machinery — Electro-sensitive protective equipment — Part 2: Particular requirements for equipment using active opto-electronic protective devices (AOPDs)*

IEC 61496-3:2008, *Safety of machinery — Electro-sensitive protective equipment — Part 3: Particular requirements for active opto-electronic protective devices responsive to diffuse Reflection (AOPDDR)*

IEC 61800-5-1:2007, *Adjustable speed electrical power drive systems — Part 5-1: Safety requirements — Electrical, thermal and energy*

IEC 61800-5-2:2016, *Adjustable speed electrical power drive systems — Part 5-2: Safety Requirements — Functional*

3 Terms, definitions and abbreviated terms

3.1 Terms and definitions

For the purposes of this document, the following terms and definitions given in ISO 12100:2010 and the following apply.

ISO and IEC maintain terminological databases for use in standardization at the following addresses:

— ISO Online browsing platform: available at https://www.iso.org/obp

— IEC Electropedia: available at http://www.electropedia.org/

3.1.1
injection moulding machine
machine for the cyclic production of moulded parts from plastics and/or rubber

Note 1 to entry: The material is injected through a nozzle into a *mould* (3.1.2) containing one or more cavities in which the article is formed.

Note 2 to entry: An injection moulding machine essentially consists of one or more *clamping units* (3.1.6), one or more *injection units* (3.1.8), drive and control systems.

Note 3 to entry: Examples of horizontal and vertical injection moulding machine are shown in Annex A.

3.1.2
mould
exchangeable part consisting of two or more halves clamped on the platens of the machine in which the material is injected

© ISO 2020 – All rights reserved

Documents
Document Sharing Hub
Full document details: BS EN ISO 20430:2020

3.1.3
ejector
driven component (e.g. pin with linear movement) inside a *mould* (3.1.2) used for the ejection of the moulded part(s) out of the opened mould

3.1.4
core
driven component inside a *mould* (3.1.2) for carrying out mould functions, e.g. enabling undercuts in the moulded part

3.1.5
mould area
area between the platens where the *mould* (3.1.2) is fixed

3.1.6
clamping unit
part of the machine that holds, opens and closes the *mould* (3.1.2)

3.1.7
clamping mechanism area
area which comprises mechanisms for the movement of the movable platen and/or the application of the clamping force

3.1.8
injection unit
unit for processing (plasticizing and/or homogenizing) and delivering material through a nozzle

3.1.9
carousel machine
machine consisting of two or more *clamping units* (3.1.6) mounted on a carousel in either a vertical or horizontal configuration to index on one or more fixed *injection units* (3.1.8)

Note 1 to entry: See Figure 1.

© ISO 2020 – All rights reserved
Documents
Document Sharing Hub
Full document details: BS EN ISO 20430:2020

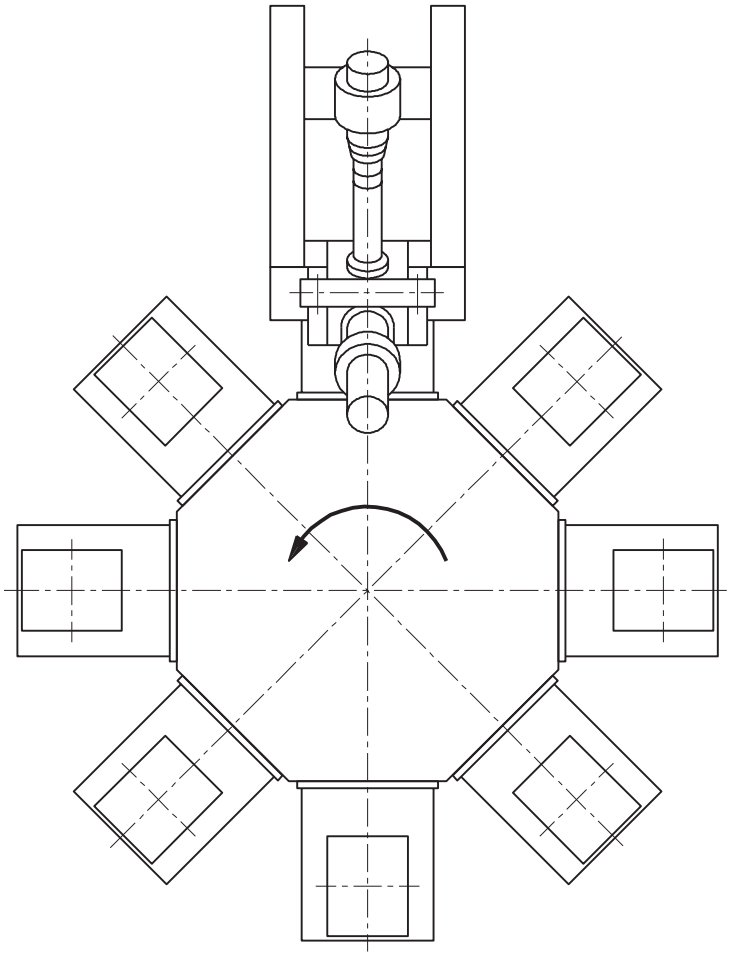

Figure 1 — Example of a carousel machine, shown without guards

3.1.10
shuttle-table machine
machine with a sliding table/platen
machine designed to contain one or more parts of *moulds* (3.1.2) attached to a sliding table/platen

Note 1 to entry: The table/platen indexes the parts of the mould by a sliding movement between the loading/unloading station and the injection position.

Note 2 to entry: See Figure 2.

© ISO 2020 – All rights reserved

Documents
Document Sharing Hub
Full document details: BS EN ISO 20430:2020

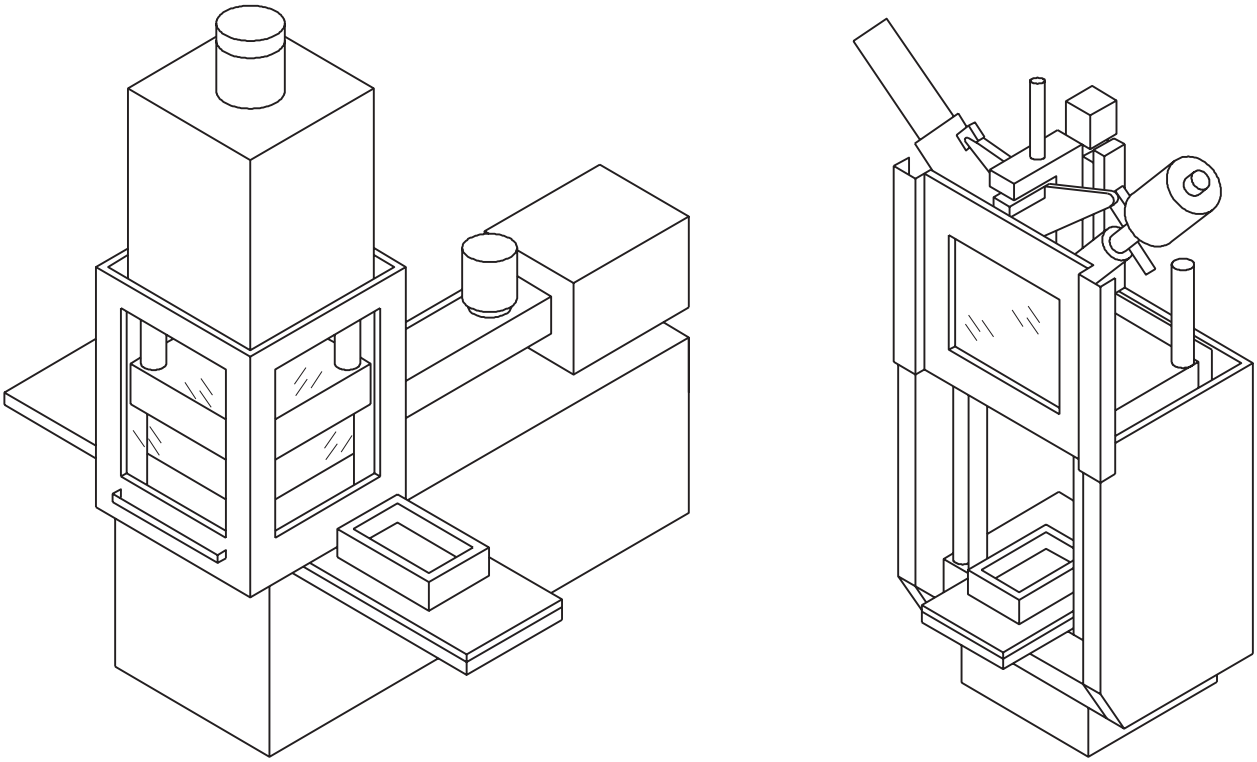

Figure 2 — Examples of shuttle-table machines (two stations left; single station right), shown without guards for the movements of the table

3.1.11
turn-table machine
machine designed to contain one or more parts of *moulds* (3.1.2) attached to a rotating table

Note 1 to entry: The table indexes the parts of the mould by a rotary movement between the loading/unloading station and the injection position.

Note 2 to entry: See Figure 3.

© ISO 2020 – All rights reserved
Documents
Document Sharing Hub
Full document details: BS EN ISO 20430:2020

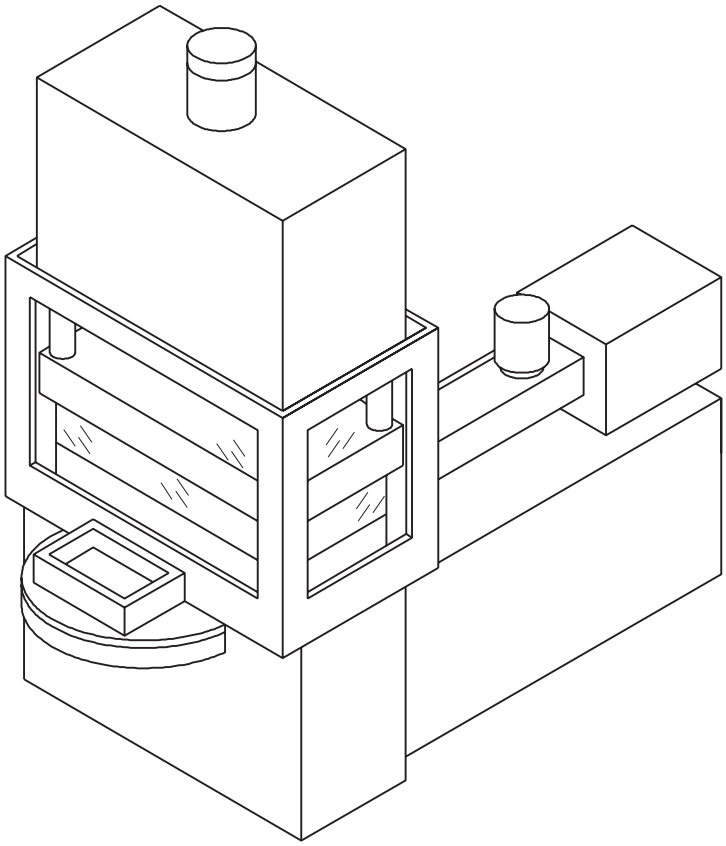

Figure 3 — Example of a turn-table machine, shown without guards for the movements of the table

3.1.12
multi-station machine with mobile injection unit
machine consisting of a mobile *injection unit* (3.1.8) which indexes between two or more stationary *clamping units* (3.1.6)

Note 1 to entry: See Figures 4 and 5.

© ISO 2020 – All rights reserved

Documents
Document Sharing Hub
Full document details: BS EN ISO 20430:2020

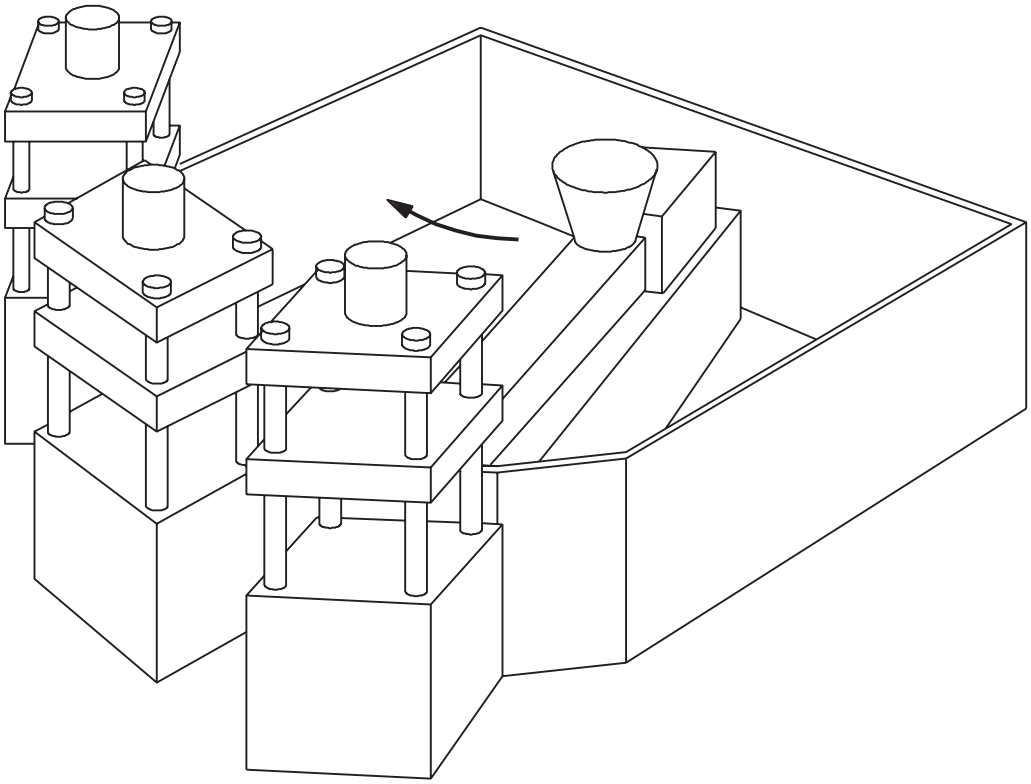

Figure 4 — Example of multi-station machine with mobile injection unit, shown without guards for the clamping units

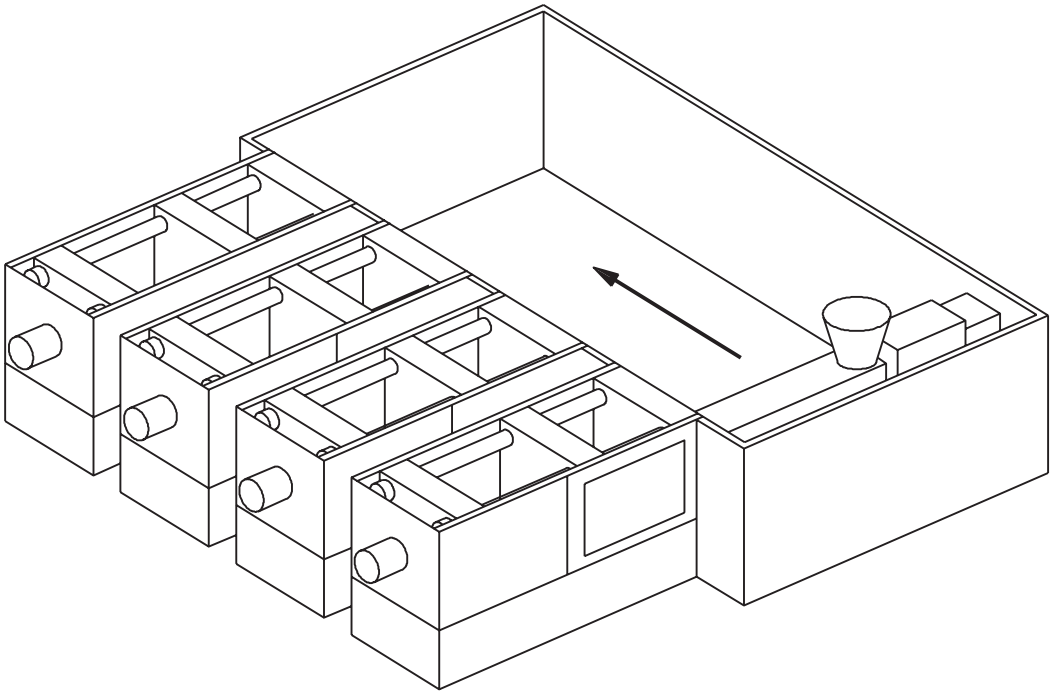

Figure 5 — Example of multi-station machine with mobile injection unit, shown with guards for the clamping units

© ISO 2020 – All rights reserved
Documents
Document Sharing Hub
Full document details: BS EN ISO 20430:2020

3.1.13
ancillary equipment
equipment which interacts with the *injection moulding machine* (3.1.1)

Note 1 to entry: Examples are pick and place device, robot, mould changing equipment, mould clamping system or conveyor.

3.1.14
cellular foam injection moulding
injection moulding which involves either an entrained gas mixed into the melt or a granulate containing a foaming agent to achieve a cellular-structured product

3.1.15
electrical axis
axis where the primary movement of the axis is initiated by electrical energy

3.1.16
hydraulic axis
axis where the primary movement of the axis is initiated by hydraulic energy

3.1.17
standstill
condition under which there is no movement of a machine part

Note 1 to entry: See Figure 6 for the relation of standstill, *safe standstill* (3.1.18), *stopping* (3.1.19), *safe stopping* (3.1.20) and *overall system stopping performance* (3.1.21).

3.1.18
safe standstill
standstill (3.1.17) during which unexpected start-up is prevented

Note 1 to entry: See Figure 6 for the relation of standstill , safe standstill, *stopping* (3.1.19), *safe stopping* (3.1.20) and *overall system stopping performance* (3.1.21).

3.1.19
stopping
deceleration of a movement of a machine part until *standstill* (3.1.17) is achieved

Note 1 to entry: See Figure 6 for the relation of standstill , *safe standstill* (3.1.18), stopping, *safe stopping* (3.1.20) and *overall system stopping performance* (3.1.21).

3.1.20
safe stopping
controlled *stopping* (3.1.19) and following *standstill* (3.1.17) during which a hazardous situation is prevented

Note 1 to entry: See Figure 6 for the relation of standstill , *safe standstill* (3.1.18), stopping , safe stopping and *overall system stopping performance* (3.1.21).

3.1.21
overall system stopping performance
time interval between the actuation of the sensing function and until *standstill* (3.1.17) is achieved

Note 1 to entry: See Figure 6 for the relation of standstill , *safe standstill* (3.1.18), *stopping* (3.1.19), *safe stopping* (3.1.20) and overall system stopping performance.

© ISO 2020 – All rights reserved

Documents
Document Sharing Hub
Full document details: BS EN ISO 20430:2020

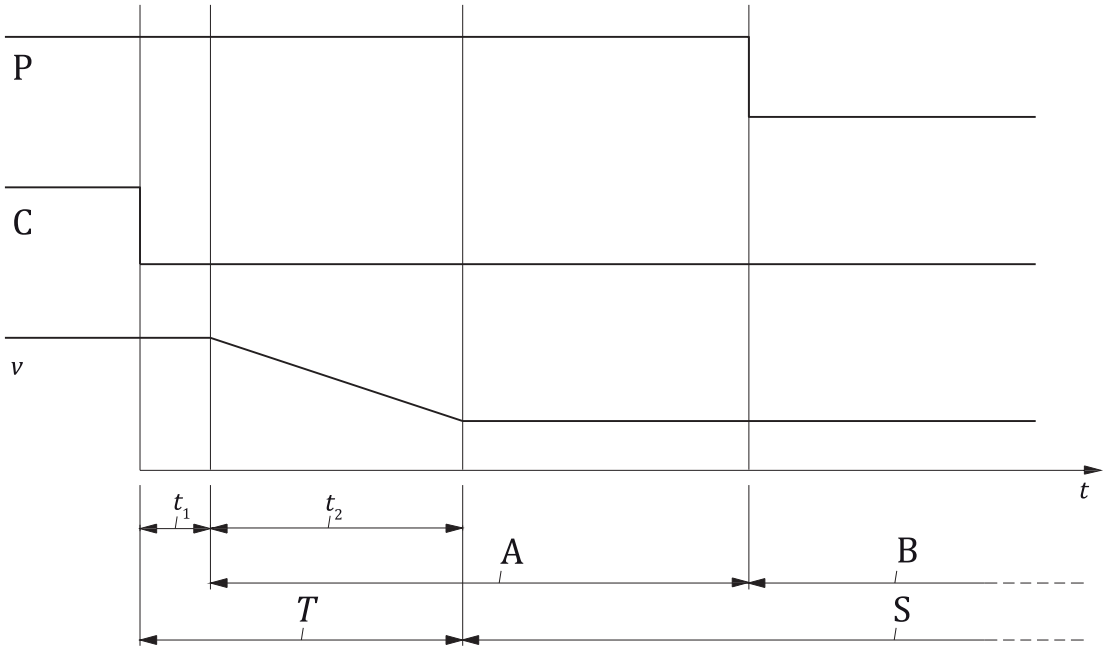

Key

P power supply to the actuator

C command (actuation of emergency stop device, interruption of light curtain, opening of interlocking guard …)

v velocity of the hazardous movement

t time

t_1 reaction time of sensor/actuator and control system

t_2 maximum stopping time required to terminate the hazardous machine function

T overall system stopping performance

S standstill

A safe stopping

B safe standstill

Figure 6 — Diagram for standstill, safe standstill, stopping, safe stopping and overall system stopping performance

3.1.22
safety-related input
input to a motor control unit activating the safety function related to the drive of the electrically driven axis

3.1.23
operating position
position in front of the *mould area* (3.1.5) where the operator typically stands

3.1.24
automatic mode
selectable mode of operation that runs one or more cycles continuously

3.1.25
semi-automatic mode
selectable mode of operation that runs a single cycle and then stops

3.1.26
manual mode
selectable mode of operation that allows manual activation of individual movements

© ISO 2020 – All rights reserved
Documents
Document Sharing Hub
Full document details: BS EN ISO 20430:2020

3.2 Abbreviated terms

AOPD	active opto-electronic protective device (see IEC 61496-2:2013)
AOPDDR	active opto-electronic protective device responsive to diffuse reflection (see IEC 61496-3:2008)
ESPE	electro-sensitive protective equipment (see IEC 61496-1:2012)
PL	performance level (see ISO 13849-1:2015)
PL_r	required performance level (see ISO 13849-1:2015)
PLC	programmable logic controller (see ISO 13849-1:2015)
SS1	safe stop 1 (see IEC 61800-5-2:2016)
STO	safe torque off (see IEC 61800-5-2:2016)

4 Safety requirements and/or protective/risk reduction measures

4.1 Basic requirements

4.1.1 General

Machinery shall comply with the safety requirements and/or protective/risk reduction measures of this clause. In addition, the machine shall be designed in accordance with the principles of ISO 12100:2010 for relevant but not significant hazards, which are not dealt with by this document.

Protective systems and safety-related parts of the control systems shall be in accordance with:

— Protective Type I, II and III as specified in Annexes B, C and D. These annexes describe minimum requirements and the calculation of the PL of the whole system achieved is not required; or

— the PL_r in accordance with ISO 13849-1:2015, as specified in the relevant subclauses.

NOTE The safety level achieved when applying the PL_r as specified in the relevant subclauses is at least equivalent to the safety level achieved when applying the annexes.

4.1.2 Start, stop and restart functions

4.1.2.1 Start function

The start of an operation shall be possible only when all safeguards are in place and functioning (see IEC 60204-1:2016, 9.2.3.2). The machine shall only be started by actuation of the start device provided for that purpose or closing a control guard in accordance with 4.2.4.

4.1.2.2 Stop function

4.1.2.2.1 Normal stop

The machine shall be equipped with a control device activating a stop function in accordance with stop category 0 or 1 as described in IEC 60204-1:2016, 9.2.2, that brings the machine to a complete stop.

4.1.2.2.2 Operational stop

For operational reasons, e.g. to permit an easier and more rapid restart of the machinery, it could be necessary to provide a stop control that does not cut off the energy supply to the actuators.

© ISO 2020 – All rights reserved

AVA Documents Document Sharing Hub
Full document details: BS EN ISO 20430:2020

In this case, in addition to the above normal stop function, a stop category 2 may be used for the movements in the areas which are enclosed by safeguards which are in place and functioning. When a safeguard is activated, stop category 0 or 1 shall become effective as specified in the relevant subclauses.

4.1.2.3 Interruption or failure of the power supply

An interruption or a failure of the power supply shall not result in a loss of safety function and restoration of the energy supply shall not result in the automatic restarting of the machine (see ISO 12100:2010, 6.2.11.4 and 6.2.11.5).

4.1.3 Emergency stop

The emergency stop shall function as a category 0 or 1 stop as described in IEC 60204-1:2016, 9.2.2 ensuring the fastest stopping.

Emergency stop devices shall be in accordance with ISO 13850:2015 and IEC 60204-1:2016, 10.7. An emergency stop device shall, at a minimum, be located at each operator station.

Actuation of an emergency stop device shall stop any dangerous movement and shall discharge the hydraulic accumulators.

In addition, the actuation of emergency stop devices shall stop the supply of the following unless their continued supply is necessary to prevent further hazards such as overheating/overpressure when processing materials which can lead to degradation (e.g. PVC):

— power to the cooling/heating elements;

— gas/water.

See 6.2.2.

4.1.4 Guards

4.1.4.1 Common requirements

Guards shall be designed in accordance with ISO 14120:2015.

Safety distances for distance guards, enclosing guards, and interlocking guards shall be in accordance with the following unless otherwise specified in this document:

— ISO 13857:2008, Table 1 for reaching over protective structures;

— ISO 13857:2008, Table 3 for reaching around with limitation of movement;

— ISO 13857:2008, Table 4 for reaching through regular openings;

— ISO 13857:2008, Table 6 for reaching around with additional protective structures;

— ISO 13857:2008, Table 7 for reaching through openings of regular shape by lower limbs.

As an alternative to ISO 13857:2008, Table 1, protective structures may be designed as shown in Figure 7, provided that:

— dimension x is ≥1 600 mm; and

— dimensions a, b and c are in accordance with ISO 13857:2008, Table 1. In this case, $c = c' + r$ (see Figure 7).

© ISO 2020 – All rights reserved
Documents
Document Sharing Hub
Full document details: BS EN ISO 20430:2020

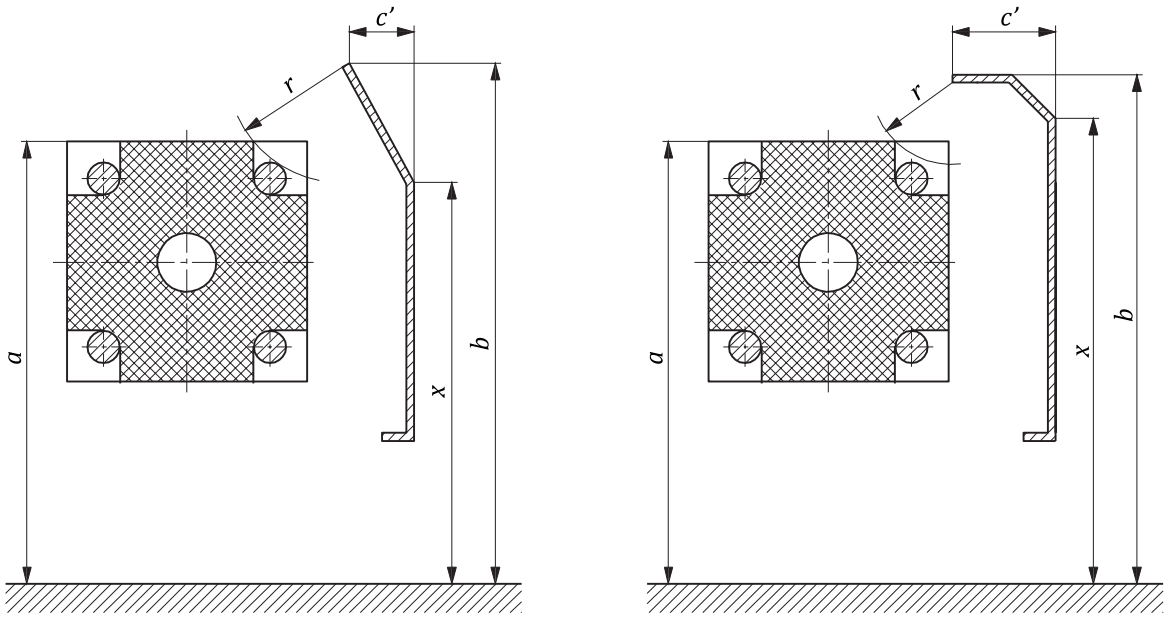

Key

a height of hazard zone

b overall height of protective structure

c horizontal safety distance to hazard zone in ISO 13857:2008, Table 1

c′ depth of protective structure

r distance from the nearest edge of the protective structure to the hazardous point

x distance from floor to angle of the protective structure

Figure 7 — Alternative shapes for protective structures

Closing of an interlocking guard shall not automatically initiate further movement and a new start command shall be required, unless a control guard in accordance with 4.2.4 is used.

Interlocking devices associated with guards shall fulfil the requirements of ISO 14119:2013, especially regarding the selection, arrangement and mounting. Reasonably foreseeable manipulation shall be prevented. Type 3 interlocking devices according to ISO 14119:2013 shall only be used if in the specific application they cannot be defeated. When a Type 3 or Type 4 interlocking device according to ISO 14119:2013 is used, it shall have two independent electrical contacts, and both shall be independently connected to the control and monitoring system.

NOTE The connection between the control and monitoring systems to the shut-off device(s) depends on the safety level required.

4.1.4.2 Interlocking guards without guard locking

Movable interlocking guards without guard locking shall be positioned so that when the guard is opened, the overall system stopping performance, *T*, is shorter than the access time, *t*.

The access time, *t*, is calculated with Formula (1):

$$t = \frac{d}{v} + t_3 \tag{1}$$

© ISO 2020 – All rights reserved

Documents
Document Sharing Hub
Full document details: BS EN ISO 20430:2020

where

d is the minimum distance from the nearest edge of the opening of the guard to the hazardous point;

v is 1,6 m/s, approach speed as defined in ISO 13855:2010;

t_3 is the time required to open the guard to the extent that the opening size permits access of the relevant parts of the body (see ISO 13855:2010, Clause 9).

For manually operated guards, t_3 shall be:

— 100 ms; or

— calculated with regard to the forces in ISO 14119:2013, Table I.1; or

— determined in accordance with ISO 13855:2010, Clause 9.

For power-operated guards, t_3 shall be determined in accordance with ISO 13855:2010, Clause 9.

When calculating or measuring the overall system stopping performance, T, the worst case shall be taken into account for each of the following factors during the whole lifetime of the machine and also in the case of power failure:

— speed;

— mass;

— temperature;

— switching time of valves/contactors; and

— ageing of components.

See 6.2.3.

If a dual channel architecture (use of Protective Type III or ISO 13849-1:2015, Category 3 or 4 for the safety-related parts of the control system) is used and a delay of the stopping time of the channels is detected thereby preventing the next cycle, the calculation of T may take into account the faster of the two stopping channels.

When $t < T$, hazardous run-down of the movement will occur. In this case, the guards for that movement shall be interlocking guards with guard locking (see 4.1.4.3).

NOTE 1 As an alternative, a mechanical brake or equivalent braking system can be used to reach the required overall system stopping performance.

NOTE 2 For the rotation of the plasticizing screw and for the linear movement of the plasticizing screw or piston, there is no hazardous run-down.

4.1.4.3 Interlocking guards with guard locking

All the following requirements for movable interlocking guards with guard locking shall be fulfilled.

a) For the guard locking device, well-tried components in accordance with ISO 13849-1:2015, 6.2.4 shall be used. The components shall be designed to withstand a minimum force of 1 000 N, applied for example when trying to open the guard with guard locking still effective.

b) Guard locking shall remain effective until all hazardous movements in the protected area have ceased.

© ISO 2020 – All rights reserved
Documents
Document Sharing Hub
Full document details: BS EN ISO 20430:2020

c) If Protective Type II is applied for the clamping mechanism area or Protective Type III is applied for the mould area, the detection of standstill shall be safe against a single fault. This shall be accomplished by one of the following measures:

— automatic monitoring of two independent standstill signals; or

— standstill detection in accordance with PL_r = d; or

— permanent automatic monitoring of the change of position of the platen, e.g. by means of an encoder.

d) If guard locking is necessary for the movement of the injection unit and Protective Type I is applied, the detection of standstill shall be in accordance with PL_r = b.

e) If guard locking is necessary for movements of cores and ejectors and Protective Type II is applied, the detection of standstill shall be in accordance with PL_r = b.

4.1.5 ESPE in the form of light curtains

Light curtains as defined in IEC 61496-2:2013, 3.205 shall be designed in accordance with IEC 61496-1:2012 and IEC 61496-2:2013.

Light curtains shall become effective as soon as the injection moulding machine is switched on.

The positioning and detection capability of light curtains shall be in accordance with the formulae given in ISO 13855:2010, Clause 6.

It shall not be possible to reach the hazard zone around, above or beneath the light curtains.

The end of an interruption of a light curtain shall not automatically initiate any further movement. A new start command shall be required.

An acknowledgement switch in accordance with the single acknowledgement system as described in Annex F shall be fitted on those sides of the machine where light curtains are installed.

Before it is possible to give a start command for a cycle or movement, it shall be necessary to actuate the acknowledgement switch after interruption of the corresponding light curtain, except if:

— the light curtain that has been interrupted is located on the side of the machine where a cycle can be initiated; and

— the light curtain has been interrupted when access is foreseen by the operating process and the machine is in a safe condition (e.g. in case of a turn-table/shuttle-table machine if a mould was brought into loading/unloading station to remove moulded parts and/or insert parts in semi-automatic mode, and for other machines at the end of a machine cycle in semi-automatic mode) and no whole-body access is possible.

For machines where whole-body access is possible, the above-mentioned acknowledgement switch may be used as the single acknowledgement system described in 4.2.7 and 4.2.8. Where a double acknowledgement system is required (see 4.2.8), the above-mentioned acknowledgement switch may be used as second acknowledgement switch 2 as specified in F.2.

See also 6.2.3, 6.2.4 and 6.2.5.

4.1.6 Two-hand control devices

The two-hand control devices shall be designed in accordance with ISO 13851:2002.

The actuators of the two-hand control devices shall be positioned in accordance with the formulas given in ISO 13855:2010, Clause 8, and allow a clear view of the hazard zone.

© ISO 2020 – All rights reserved

Documents
Document Sharing Hub
Full document details: BS EN ISO 20430:2020

At the sides of the machine where no actuators of two-hand control devices are installed, additional safeguarding shall be provided to prevent access to the hazard zone.

See also 6.2.3 and 6.2.4.

4.1.7 Pressure-sensitive mats, floors and edges

Pressure-sensitive mats and floors shall be designed in accordance with ISO 13856-1:2013. Pressure-sensitive edges shall be designed in accordance with ISO 13856-2:2013.

Pressure-sensitive mats, floors and edges shall be active when the injection moulding machine is switched on.

Where pressure-sensitive mats or floors are used to prevent unexpected start-up of hazardous movement:

— the sensing area shall cover the whole area where the operator can stand and is exposed to hazardous movement; and

— the control system shall be in accordance with ISO 14118:2017.

4.1.8 Requirements for automatic monitoring

If there is a single fault in one of the safety-related components of a control system, it shall not be possible to initiate the next movement or the next cycle. Automatic monitoring shall be carried out at least once during each operation cycle of the corresponding safeguard.

The monitoring circuit shall not produce a direct control signal for starting a movement or initiating a cycle.

Monitoring may be performed via the PLC. If so, the monitoring programme shall be in permanent memory with protection against electrical interference, and the monitoring system shall be equipped with a start-up test and life tests (e.g. watchdog timer). In addition, for position switches, contactors and/or motor control units with the safety-related function which control the same safety function, the following shall apply:

— each one of those components shall be connected to its own input module; or

— if a common input module is used, either the inverse signals from each one of those components shall be input as well, or any fault in the input circuits shall be automatically recognized; or

— if an input unit (input card) consists of several input modules, the signals from each of the components which are to be monitored for antivalence (logic "exclusive or"), shall be separated by at least the input module bit distance (e.g. 4 bits, 8 bits or 16 bits). In addition, signals from each one of those components which are not anti-valent and are connected to the same input module, shall not occupy adjacent bits.

If relays are used, e.g. for contact multiplying, they shall have positive mechanically linked contacts. Automatic monitoring of these relays is necessary. This monitoring may be carried out by a programmable electronic system. Any fault in a relay shall be automatically recognized and the start of any further hazardous movement shall then be prevented.

A bus system may be used for the monitoring function, e.g. for the standstill information and confirmation of switch-off conditions when using a motor control unit with the safety-related function. In this case, basic precautions against signal failures (i.e. no change of signal state within a relevant period after request or cyclically) shall be taken by the monitoring circuit of the machine.

The enable signal for the control circuit of the machine shall be produced by the monitoring circuit.

Where the Protective Types (Annexes B to E) are not applied, the monitoring system shall be designed so that the PL_r as specified in 4.2 to 4.9 is achieved.

© ISO 2020 – All rights reserved
Documents
Document Sharing Hub
Full document details: BS EN ISO 20430:2020

4.1.9 Movements caused by gravity during production

Hazardous movement caused by gravity during production shall be prevented by hydraulic, pneumatic or mechanical restraint devices (e.g. brakes, jam bars, non-return valves/check valves).

The restraint devices shall be activated automatically when safeguarding allows access to the hazardous area (unless otherwise specified, see 4.2.6).

Where hydraulic or pneumatic restraint devices are used, they shall be fitted as close as possible to the cylinder. Cutting ring fittings shall not be used.

Transmission components (e.g. gears, chains, hoses) shall be well-tried components according to ISO 13849-1:2015, 6.2.4.

4.2 Mould area

4.2.1 Hazards due to the closing movement of the platen during production

4.2.1.1 Hydraulically operated platen movement

Where the movement of the platen is hydraulically operated, hazards due to the closing movement of the platen shall be prevented by one of the following means:

a) interlocking guards in accordance with 4.1.4. The safety function of the interlocking preventing the closing movement of the platen when the interlocked guard is open, shall be in accordance with Protective Type III or PL_r = e;

b) if no splashing hazard exists, light curtains in accordance with 4.1.5 and:

   1) Protective Type III; or

   2) IEC 61496-1:2012, Type 4, acting on a control circuit in accordance with PL_r = e.

Where proportional valves are used as a main shut-off device for the control of the platen movement, Annex G shall apply.

4.2.1.2 Electrically operated platen movement

Where the movement of the platen is achieved by an electrical axis, hazards due to the closing movement of the platen shall be prevented by one of the following means:

a) Interlocking guards with guard locking shall be in accordance with:

   1) Protective Type III; or

   2) PL_r = e for safe standstill and PL_r = d for the control circuit of the guard locking function (see 4.1.4.3), not requiring two locking devices.

b) Interlocking guards without guard locking shall be in accordance with:

   1) Protective Type III; or

   2) PL_r = e for safe standstill and PL_r = d, category 3 for safe stopping.

   NOTE This can be achieved, for example, by using an external electromechanical circuit.

c) If no splashing hazard exists, light curtains in accordance with 4.1.5 and:

   1) Protective Type III; or

   2) IEC 61496-1:2012, Type 4, acting on a control circuit in accordance with PL_r = e for safe standstill and PL_r = d, category 3 for safe stopping.

© ISO 2020 – All rights reserved

AVA Documents Document Sharing Hub
Full document details: BS EN ISO 20430:2020

NOTE This can be achieved, for example, by using an external electromechanical circuit.

For electrical axis, when an interlocking guard (with or without guard locking) for the mould area is open or a light curtain is interrupted, safe standstill shall be achieved by interrupting the energy supply to the movement of the platen in accordance with Protective Type III or PL_r = e. This interruption shall be independent from the non-safety PLC and be achieved using:

— a contactor or contactors in the power supply to the electrical motor or the motor control unit with the safety-related function; and/or

— safety-related input(s) to the motor control unit with the safety-related function.

4.2.1.3 Use of two-hand control devices

As an alternative to interlocking guards or light curtains as described in 4.2.1.1 and 4.2.1.2, two-hand control devices may be used if all the following requirements apply:

— it is not possible to safeguard the mould area by the use of guards or light curtains, for example on injection moulding machines used for assembling long or bulky parts (see Figure 8); and

— machine is designed to process only materials which do not generate splashing hazards during processing; and

— whole-body access to the mould area is not possible (see 4.2.8).

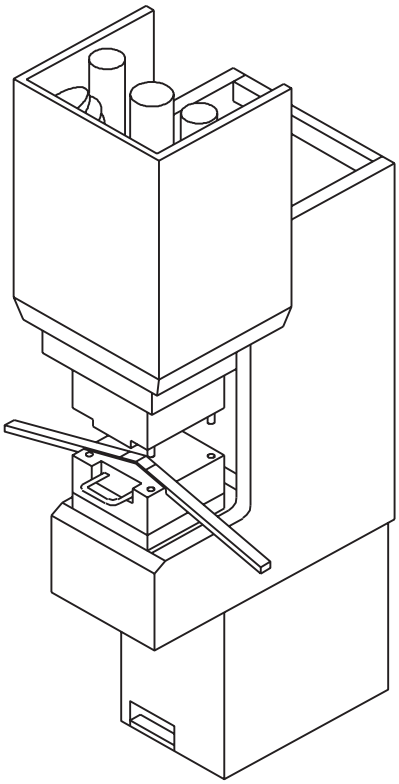

Figure 8 — Example of an injection moulding machine for assembling long or bulky parts

On these machines, the following applies:

a) The two-hand control device shall be in accordance with:

1) Annex E; or

2) ISO 13851:2002, Type IIIC, with PL_r = e for hydraulically operated platen; or

© ISO 2020 – All rights reserved
Documents
Document Sharing Hub
Full document details: BS EN ISO 20430:2020

3) ISO 13851:2002, Type IIIC, with PL_r = e for safe standstill, and PL_r = d, category 3 for safe stopping for electrical axis.

b) The actuators of a two-hand control device may be released without interrupting the movement of the platen, if the mould is sufficiently closed (gap smaller than or equal to 6 mm). For this purpose:

1) the maximum opening shall be monitored automatically by a circuit in accordance with PL_r = e; and

2) the alternative control measures allowing the platen to close while the safeguard is inhibited shall conform with PL_r = e; and

3) the position sensors shall have at least the same level of integrity as the two-hand control device.

c) The two-hand control device shall be reactivated automatically before the start of the next machine cycle.

4.2.1.4 Access via the top side of machines with a horizontal closing movement of the platen

Access via the top side of machines with a horizontal closing movement of the platen shall be prevented by interlocking top guards in accordance with Protective Type II or PL_r = d. This is not required where safety distances from designated access or designated working positions in accordance with ISO 13857:2008, Table 1 or the alternative described in 4.1.4.1 are achieved, either by guards or fixed elements on the machine acting as fixed guards. If the top guard is connected to the movable front or rear guard in such a way that the top guard cannot be moved independently, it does not require additional interlocking. Closing the top guard shall not automatically initiate any further movement. A new start command shall be required at the side of the machine where a cycle can be initiated.

4.2.1.5 Machines processing materials that require de-gassing

On machines processing materials that require de-gassing, the movable platen may move during de-gassing. For this purpose:

— the gap between the two mould surfaces shall not exceed 6 mm; and

— this maximum opening shall be monitored automatically by a control circuit in accordance with PL_r = e; and

— the alternative control measures allowing the platen to close while the safeguard is open shall conform to PL_r = e.

4.2.2 Hazards due to the closing movement of the platen on sides of the machine where a cycle cannot be initiated

On sides of the machine where a cycle cannot be initiated, interlocking guards in accordance with Protective Type III or PL_r = e may be replaced by interlocking guards in accordance with Protective Type II or PL_r = d.

Where the movement of the platen is hydraulically operated and Protective Type II is used, opening of these guards shall automatically:

— switch off the energy supply to the main drive for any hazardous movement; and

— shut off and discharge the hydraulic accumulator for the closing movement of the platen.

Where the movement of the platen is achieved by an electrical axis and Protective Type II is used and SS1 is used to prevent hazardous run-down (see C.2.3), an additional mechanical device (e.g. brake) or equivalent system shall be installed. If a friction-based brake is used, it shall be regularly tested. Start of production shall only be possible if the brake has been successfully tested within the last four weeks. If the machine is operating continuously in automatic mode, it is not necessary to stop the machine

© ISO 2020 – All rights reserved

Documents
Document Sharing Hub
Full document details: BS EN ISO 20430:2020

for the test. In this case, a test is necessary before restarting production after the machine has been stopped.

Closing the guard shall not automatically initiate any further movement. A new actuation of the start device shall be required at the side of the machine where a cycle can be initiated.

4.2.3 Hazards due to movements other than the closing movement of the platen during production

4.2.3.1 General requirements

The guards or protective devices, as specified in 4.2.1 and 4.2.2, shall also protect against hazards due to movements other than the closing movement of the platen during production.

If either a guard is opened, a light curtain is interrupted, or an actuator of a two-hand control device is released, then all of the following conditions shall apply:

a) arrest and prevent rotation of the plasticizing screw in accordance with Protective Type I or PL_r = b unless there is no splashing hazard (e.g. machines designed to process only materials which do not generate splashing hazards during processing, or machines fitted with a shut-off nozzle in a closed position);

b) arrest and prevent forward movement of the plasticizing screw or piston in accordance with Protective Type II or PL_r = c unless the machine is equipped with a shut-off device (e.g. nozzle) designed to resist at the maximum injection pressure;

c) arrest and prevent forward movement of the injection unit in accordance with Protective Type I or PL_r = b;

d) arrest and prevent movements of cores and ejectors, and their drive mechanisms in accordance with Protective Type II or PL_r = c;

e) arrest and prevent the closing movement of the platen during mould height adjustment. If the maximum speed of the mould height adjustment is:

   1) ≤10 mm/s, then Protective Type I or PL_r = b shall apply;

   2) >10 mm/s and ≤33 mm/s, then Protective Type II or PL_r = c shall apply;

   3) >33 mm/s, then:

      i) for the side where a cycle can be initiated, Protective Type III or PL_r = e shall apply;

      ii) for the side where a cycle cannot be initiated, Protective Type II or PL_r = d shall apply;

f) arrest and prevent the moving parts of the power-operated shut-off nozzle or splatter guard (see 4.9.4) and their drives in accordance with Protective Type II or PL_r = c, if a hazard due to these movements exists;

g) arrest and prevent the rotational movement of the mould and its drive mechanism according to Protective Type II or PL_r = d.

If the mould area is accessible through the nozzle aperture of the fixed platen (e.g. during changing the mould), opening an interlocked guard for the nozzle area shall stop the closing movement of the movable platen, in accordance with PL_r = b.

4.2.3.2 Special modes for movements of cores and/or ejectors with protective devices disabled

To allow movements of cores and/or ejectors with the guard of the mould area opened or the light curtain interrupted on the side where the movements of cores and/or ejectors are operated, a lockable two- or three-position mode selector in accordance with ISO 12100:2010, 6.2.11.10 shall be used.

© ISO 2020 – All rights reserved
Documents
Document Sharing Hub
Full document details: BS EN ISO 20430:2020

The design shall ensure that, for each position not in use, circuits are completely isolated by positively operated contacts or by redundant and monitored hardware.

In position 1 of the mode selector, movements of cores and/or ejectors shall only be possible with the guard of the mould area closed or the light curtain not interrupted.

If a two-position mode selector is used, in position 2, either a) or b) below shall be activated.

If a three-position mode selector is used:

— in position 2, a) shall be activated; and

— in position 3, b) shall be activated.

a) In this mode, movements of cores and/or ejectors with the guard of the mould area opened or the light curtain interrupted are permitted only by means of:

   — a two-hand control device in accordance with ISO 13851:2002, Type II; or

   — a hold-to-run control device in accordance with PL_r = c and a reduced speed of ≤10 mm/s for the movements of the cores and/or ejectors; the speed control shall be in accordance with PL_r = b;

b) In this mode:

   1) a warning shall appear on the control panel and movements of cores and/or ejectors shall only be possible after an acknowledgement by the operator. The warning shall remain on the control panel as long as this mode is selected; and

   2) movements of cores and/or ejectors with the guard of the mould area opened or the light curtain interrupted are permitted only after acknowledgement of the warning and by means of:

      — a two-hand control device in accordance with ISO 13851:2002, Type II; or

      — a hold-to-run control device in accordance with PL_r = c; and

   3) in semi-automatic mode, cores out and/or ejectors forward movements are permitted without two-hand control device or hold-to-run control.

If the actuator of the hold-to-run control device is positioned on a portable control unit, it shall be a three-position device with the following features:

— Position 1: stop function (actuator is not operated);

— Position 2: start function (actuator is operated in its mid position);

— Position 3: stop function (actuator is operated past its mid position);

— after the actuator has passed the pressure point to position 3, a restart shall only be possible after returning the actuator to position 1.

If the hold-to-run control device is a foot pedal, the range of force required to reach position 3 shall be between 200 N and 350 N.

See 6.2.7.

4.2.4 Use of control guards

As an alternative to interlocking guards, control guards (interlocking guards with a start function) as defined in ISO 12100:2010, 3.27.6 may be used provided that:

a) the requirements of ISO 12100:2010, 6.3.3.2.5 are met with the following exceptions:

   — 6.3.3.2.5, b), because long cycle times do not create additional hazards;

© ISO 2020 – All rights reserved

Documents
Document Sharing Hub
Full document details: BS EN ISO 20430:2020

— 6.3.3.2.5, c), because long opening times do not create additional hazards; and

b) the requirements of 4.2.1 and 4.2.3 are met; and

c) it is not possible to gain whole-body access between the mould area and the guard (see 4.2.7); and

d) for machines with horizontal clamping unit:

1) dimension a for a machine without tie-bars (see Figure 10) is ≥750 mm; and

2) dimension b in Figure 9 and Figure 10 for the control guard is ≤100 mm; and

3) distances e_1 and e_2 between tie-bars (see Figure 9), or the corresponding distances e_1 and e_2 for a machine without tie-bars (see Figure 10), are ≤630 mm;

e) for machines with vertical clamping unit:

1) height h_1 in Figure 11 of the lower platen clamping surface above the operator's standing level is ≥750 mm; and

2) maximum distance h_2 in Figure 11 between the platens is ≤630 mm and the greater dimension of the platen is ≤1 000 mm; and

3) dimension b in Figure 11 for the control guard is ≤100 mm.

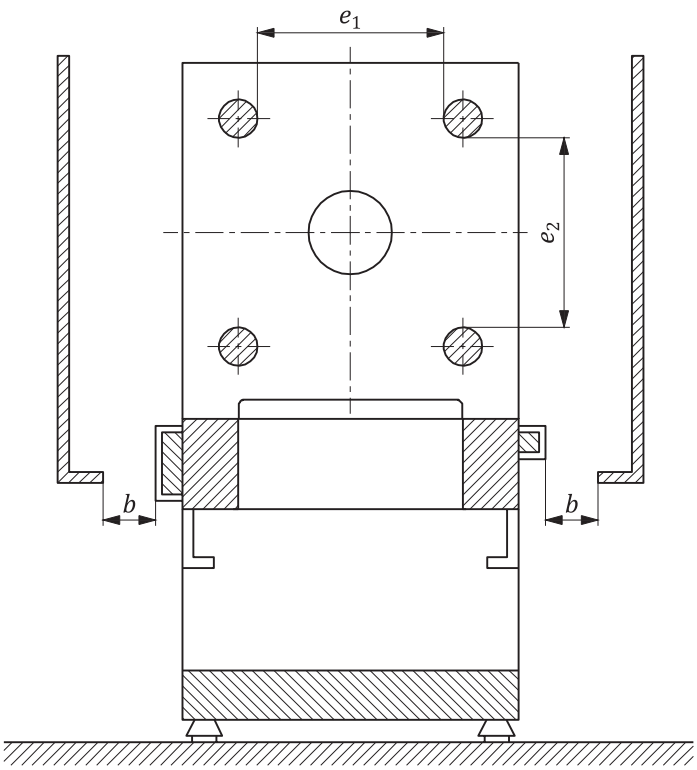

Figure 9 — Examples of the positioning of movable guards and dimensions b, e_1, e_2 for machines with horizontal clamping unit with tie-bars

© ISO 2020 – All rights reserved
Documents
Document Sharing Hub
Full document details: BS EN ISO 20430:2020

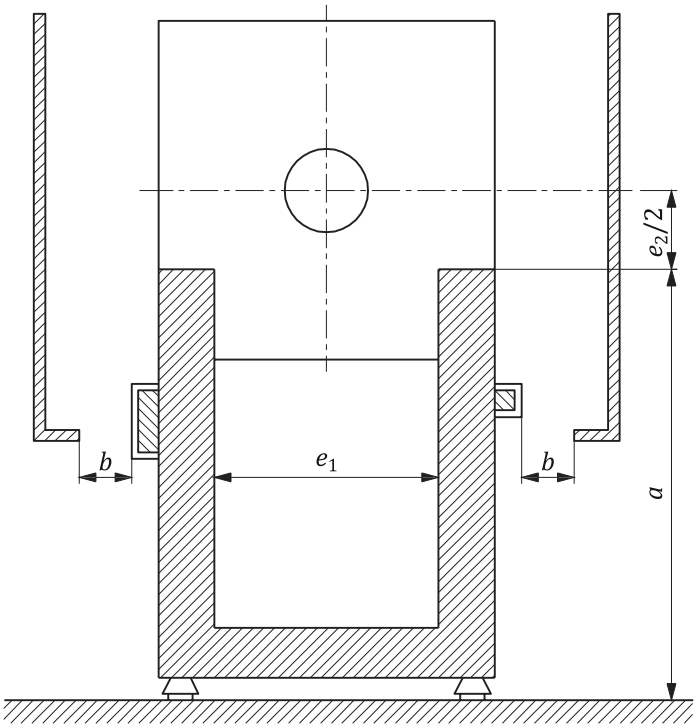

Figure 10 — Examples of the positioning of movable guards and dimensions a, b, e_1, e_2 for machines with horizontal clamping unit without tie-bars

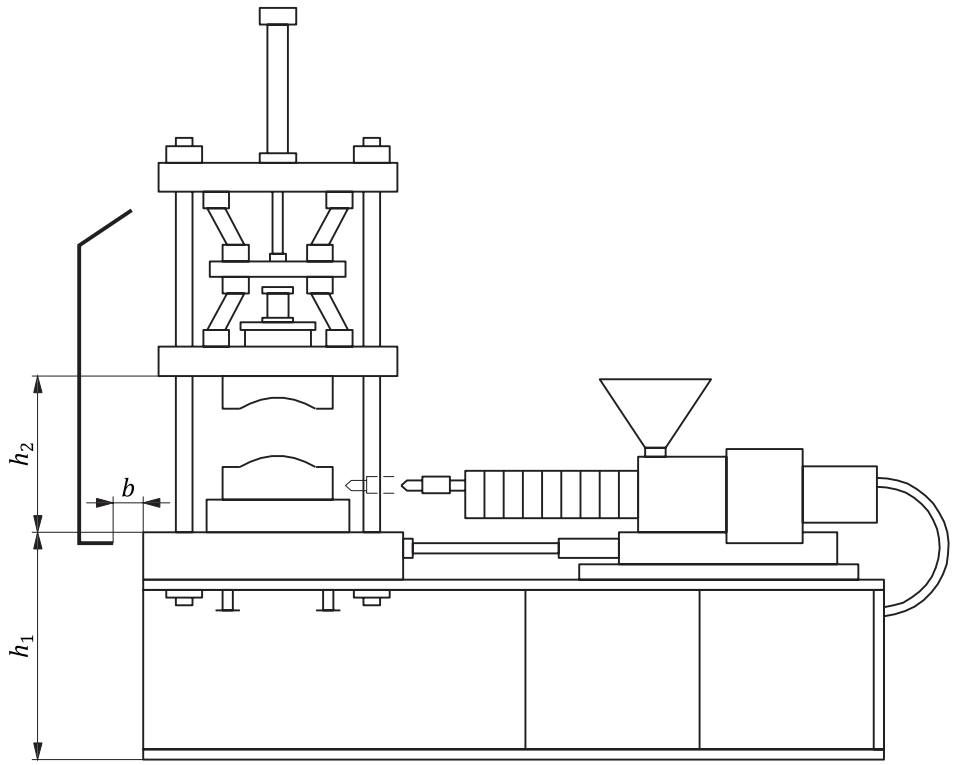

Figure 11 — Examples of the positioning of movable guards and dimensions b, h_1, h_2 for machines with vertical clamping unit (only the guard on the operator side is shown)

© ISO 2020 – All rights reserved

Documents
Document Sharing Hub
Full document details: BS EN ISO 20430:2020

In addition, for power-operated control guards:

— the release of the manual control shall be detected before each new machine cycle or after a stop of the guard. Closing the guard shall require a new actuation of the manual control; and

— for machines where the operator's action on the manual control is not maintained but the command is stored in the memory until the guard is closed, the command in the memory shall be erased whenever the time set for guard closing is exceeded or when the guard stops. This applies whether the guard is fully or partly closed; and

— see also 4.8.10.

4.2.5 Thermal hazards

Fixed and movable guards of the mould area as described in 4.1.4 shall be designed to contain any ejected plasticized material. The release of material from the plasticizing and/or injection barrels is prevented by the provisions of 4.2.3.

See 6.2.10.

4.2.6 Additional safety requirements for machines with a downstroking platen

Downstroking injection moulding machines shall be equipped with two independent restraint devices. Each device shall be able to hold the gravity load with respect to the maximum mould weight specified by the manufacturer (see 6.2.9). Such restraint devices shall be automatically engaged and effective over the complete stroke and shall not permit any further dangerous movement of the platen (e.g. using brakes, ratchet jam bar) when:

— the movable guards of the mould area are opened; or

— the light curtain is interrupted; or

— a manual actuator of a two-hand control device is released.

The safety function of the activation of the restraint devices shall be in accordance with PL_r = d, category 3.

Where two hydraulic restraint devices are installed, one of these devices may be used as one of the shut-off devices described in Protective Type III.

Where friction-based restraint devices are used, their function shall be regularly tested by subsequent engagement of each restraint device and confirmation of no movement of the machine. Start of production shall only be possible if the restraining function has been successfully tested within the last four weeks. If the machine is operating continuously in automatic mode, it is not necessary to stop the machine for the test. In this case, a test is necessary before restarting production after the machine has been stopped.

Where the platen is more than 800 mm in one of its dimensions, and the maximum distance between platens can exceed 500 mm:

— at least one of the restraint devices effective over the complete stroke shall be mechanical; or

— two hydraulic restraint devices effective over the complete stroke and one mechanical restraint device effective in one safe service position shall be used.

Where mechanical restraint devices are installed, and if it is not possible to open the movable guard of the mould area until the platen has reached its maximum opening stroke, mechanical restraint devices that only become effective in that position are permitted.

In the event of a failure of one of the restraint devices, the other device shall stop the gravity descent of the platen.

© ISO 2020 – All rights reserved
Documents
Document Sharing Hub
Full document details: BS EN ISO 20430:2020

The restraint devices shall be automatically monitored so that in the case of a failure of one of these devices,

— this failure is automatically recognized; and

— the initiation of any further downward movement of the platen is prevented.

For maintenance operations on machines where a mechanical restraint device is not installed, the machine shall be designed in a way that the movable platen can be blocked by a mechanical device or that it shall be possible to move the platen to a position where further unintentional movement by gravity is impossible. See also 6.2.11. The holding force of this mechanical device preventing the descent of the load shall be calculated with a safety factor of at least 2 with respect to the anticipated load, including the total weight of the mould and additional components fixed on the downstroking platen (see 6.2.9).

For interlocking guards with guard locking, guard locking shall remain active until:

— the correct engagement of the restraint devices has been detected; or

— the axis is in a safe position.

4.2.7 Additional requirements for machines where whole-body access is possible between the interlocking guard or light curtain for the mould area and the mould area itself

Safeguards additional to those specified in 4.2.1 and 4.2.2 shall be provided for the following machines:

— machines with a horizontal distance of more than 100 mm between the guard and the machine frame (see dimension b in Figures 9, 10 and 11), or with a horizontal distance of more than 150 mm between the light curtain and the machine frame; or

— machines with designated access positions between the guard or light curtain and the mould area and where the view of these access positions from the usual operating position is obstructed.

For these machines, one of the following protective measures shall be provided:

a) a single or double acknowledgement system in accordance with Annex F for interlocking guards or light curtains;

b) a mechanical latch which prevents the unintentional closing of interlocking guards meeting the following requirements:

   — the mechanical latch shall become effective with each opening movement of the guard; and

   — it shall be necessary to separately reset the mechanical latch before another machine cycle can be initiated. The position from which the mechanical latch is reset shall afford a clear view of the area between the interlocking guard and the mould area; and

   — the correct functioning of the mechanical latch shall be monitored at least once during each movement cycle of the guard, so that a fault in the mechanical latch will be automatically recognized. Commencement of any further platen closing movement shall be possible only if no faults have been detected; and

   — for all power-operated guards fitted with a mechanical latch, the closing movement of the guard shall be operated by a hold-to-run control device which is positioned to give a clear view of the area between the interlocking guard and the mould area;

c) a hold-to-run control device for power-operated guards with horizontal closing movement that meets the following requirements:

   — the safety function of the hold-to-run control shall be in accordance with $PL_r = c$; and

© ISO 2020 – All rights reserved

Documents
Document Sharing Hub
Full document details: BS EN ISO 20430:2020

— the hold-to-run control device actuator shall be positioned outside the protected area and in order to provide a clear view of the area between the interlocking guard or light curtain and the mould area; and

— the hold-to-run control device shall not be easily defeated (this may be achieved, for example, by automatically monitoring that the manual actuator is released after each closing movement of the guard);

d) a design element of the guard which prevents the closing of the guard when an operator is standing in the safeguarded area. It shall not be possible for the operator to easily bypass the design element when the guard is open;

e) sensitive protective equipment to detect the presence of persons between the movable guard or light curtain for the mould area and the mould area itself, for example:

1) AOPD in accordance with IEC 61496-1:2012, Type 2; or

2) pressure-sensitive mat(s) in accordance with ISO 13856-1:2013 and PL_r = c; or

3) pressure-sensitive floor(s) in accordance with PL_r = c and:

— designed in accordance with ISO 13856-1:2013; or

— designed with limit switches which shall have positive operation and shall be positively and directly actuated by the platform. Where the limit switch signals act on relays, these relays shall be redundant and monitored. The control system of the injection moulding machine shall be so designed that a regularly test of the correct functioning of the floor, minimum once a month, is necessary before starting the production. In this test, the correct working of the limit switches shall be verified e.g. by stepping upon the platform or actuating a limit switch. The specific test procedure and any necessary test device shall be provided by the machine manufacturer. See 6.2.12; or

4) AOPDDR in accordance with IEC 61496-1:2012, Type 3.

The sensitive protective equipment shall become effective when the machine is switched on and, when persons are standing in this area, shall:

— prevent the closing and opening movement of the platen in accordance with PL_r = c; and

— in the case of a power-operated guard, prevent the closing movement of the guard in accordance with PL_r = c; and

— prevent any hazardous movement of the cores and ejectors (however see 4.2.3), in accordance with PL_r = c; and

— prevent injection in accordance with PL_r = c.

4.2.8 Additional requirements for machines where whole-body access to the mould area is possible

Safeguards additional to those specified in 4.2.1 and 4.2.2 shall be provided on the following machine types:

a) machines with horizontal clamping unit and tie-bars (see Figure 9) where e_1 or e_2 > 1 200 mm. For machines with two tie-bars, the relevant dimension is e_1. For machines with three tie-bars, the relevant dimension is the maximum clearance between two tie-bars;

b) machines with horizontal clamping unit without tie-bars (see Figure 10), where:

— e_1 or e_2 > 1 200 mm; or

— a < 850 mm and e_2 > 400 mm;

© ISO 2020 – All rights reserved
Documents
Document Sharing Hub
Full document details: BS EN ISO 20430:2020

c) machines with vertical clamping unit and tie-bars where:

— e_1 or e_2 > 1 200 mm; and

— maximum opening between the platens >1 200 mm;

d) machines with vertical clamping unit without tie-bars where:

— one of the platen dimensions >1 200 mm; and

— maximum opening between the platens >1 200 mm.

For these machine types, the following additional protective devices shall be provided:

1) For machines where the mould area is safeguarded by guards:

— devices which prevent the unintentional closing of interlocking guards such as:

— a mechanical latch as specified in 4.2.7;

— a hold-to-run control device for power-operated guards with horizontal closing movement, as specified in 4.2.7; or

— a single or double acknowledgement system in accordance with Annex F;

2) For machines where the mould area is safeguarded by light curtains, a single acknowledgement switch as described in Annex F at each side where there is a light curtain. After interruption of one or more light curtain(s), an acknowledgement shall be carried out at each side of the machine where a light curtain was interrupted;

3) For machines with horizontal clamping unit, sensitive protective equipment to detect the presence of persons in the mould area meeting the following requirements:

— the sensitive protective equipment shall be in accordance with 4.2.7; and

— to prevent unintentional stopping of production, e.g. due to falling parts, the device which detects the presence of persons in the mould area may be deactivated after closing the guards or resetting the light curtains for the mould area if no presence is detected. The detection device shall be automatically reactivated in accordance with PL_r = c when a guard is opened or a light curtain is interrupted; and

— for machines which are designed for special production purposes, e.g. machines with rotary table in the middle of the mould area, additional presence detecting devices may be replaced by a double acknowledgement system in accordance with Annex F;

4) For machines with vertical clamping unit, one of the following protective devices shall be provided:

— an AOPD or AOPDDR as specified in 4.2.7 e) (see 6.2.13); or

— if the lowest position of the clamping surface of the lower platen is greater or equal to 750 mm above the operator's standing surface, a single acknowledgement system in accordance with Annex F; or

— a double acknowledgement system in accordance with Annex F.

NOTE Only one acknowledgement switch is necessary on each side of the mould area where whole-body access is possible.

For mould loading/unloading operations inside the mould area designated access and designated working positions in accordance with 4.8.8 are required.

© ISO 2020 – All rights reserved

Documents
Document Sharing Hub
Full document details: BS EN ISO 20430:2020

4.3 Clamping mechanism area or area behind the movable platen

4.3.1 Basic safety requirements

Access to hazardous movements in the clamping mechanism area or to the area behind the movable platen shall be prevented by one of the following devices:

a) interlocking guards. Opening the interlocking guards shall:

— interrupt all movements of the platen and the clamping mechanism in accordance with Protective Type II or PL_r = d; and

— interrupt the opening movement of the power-operated guard for the mould area in accordance with Protective Type I or PL_r = c, if there is a hazard for any person accessing from the guard for the clamping mechanism area;

b) light curtains for the mould area, appropriately extended in a way to cover the clamping mechanism area. An interruption of the light curtain shall stop these movements in accordance with PL_r = d;

c) fixed guards, if access is required only for machine repair or maintenance.

Access to the area of hazardous movements of the core and ejector drive mechanisms shall be prevented by interlocking guards in accordance with Protective Type I or PL_r = c or by fixed guards.

NOTE Access to the area of hazardous movements of the core and ejector drive mechanisms can be prevented by the guards for the clamping mechanism area described above.

When the guards for the mould area are open, or the light curtains are interrupted, or a manual actuator of any two-hand control devices are released, an opening movement of the platen shall only be possible if access to crushing and/or shearing points behind the movable platen is prevented.

4.3.2 Additional safety requirements for machines with an upstroking platen

On upstroking injection moulding machines, shearing or crushing hazards below the movable platen shall be prevented by a restraint device (e.g. non-return valve/check valve, brake):

— when they are due to unintentional gravity descent of that platen during setting the strokes for the cores and ejectors; or

— when it is possible to gain access under the movable platen during production.

The restraint device shall be:

— activated when the guards for the clamping mechanism area have been opened or the light curtains have been interrupted or a manual actuator of any two-hand control devices have been released; and

— effective over the complete hazardous stroke of the platen; and

— able to hold the maximum total weight of the mould fixed on the upstroking platen as specified by the manufacturer (see 6.2.9).

For repair or maintenance operations on machines where a mechanical restraint device is not installed, the machine shall be designed so that:

— the movable platen can be blocked by a mechanical device; or

— it is possible to move the platen to a position where further unintentional movement by gravity is impossible.

See also 6.2.11.

© ISO 2020 – All rights reserved
Documents
Document Sharing Hub
Full document details: BS EN ISO 20430:2020

4.3.3 Additional requirements for machines with toggle systems

If unexpected movements of the movable platen (typically opening movement) due to stored energy in the toggle system are possible:

— additional measures (e.g. brake, valve) shall be applied to prevent these unexpected movements; or

— fixed guards shall be used; or

— interlocking guards with guard locking shall be used; guard locking shall remain effective as long as the stored energy can create hazardous movements.

See 6.2.8.

4.4 Area of movement of cores and ejectors and their drive mechanisms outside the mould and/or clamping mechanism areas

Access to movement of cores and ejectors and their drive mechanisms outside the mould and/or clamping mechanism areas (see Figures A.2 and A.3, item 3) shall be prevented by:

— interlocking guards in accordance with Protective Type I or PL_r = c; or

— the light curtains of the mould area extended to cover this area and providing a safety function in accordance with PL_r = d; or

— fixed guards.

Movements of cores and/or ejectors with the guard of this area open or the light curtain interrupted may be allowed by applying 4.2.3.2.

4.5 Nozzle area

4.5.1 Mechanical hazards

Exposure to mechanical hazards in the nozzle area shall be prevented by interlocking guards or a combination of fixed and interlocking guards. Those guards shall be dimensioned so as to cover the whole area of operating movement of the nozzle during production. For machines with a horizontal injection unit, an opening in the nozzle guard underneath the nozzle, if needed for technical or process reasons, is permissible.

Interlocking guards shall be in accordance with Protective Type I or PL_r = c.

For the forward movement of injection unit, the calculation of the overall system stopping performance may be carried out without considering any failures.

The design of the guards shall prevent hazards caused by splashing of hot plasticized material.

When the interlocking guard is opened, the following movements shall be arrested and prevented in all positions of the injection unit:

— the forward movement of the injection unit(s); and

— the forward movement of the plasticizing screw or piston; and

— the rotation of the plasticizing screw unless there is no splashing hazard (e.g. machines designed to process only materials which do not generate splashing hazards during processing or machines fitted with a mechanically operated shut-off nozzle); and

— the movements of the power-operated shut-off nozzle and its drive when there are crushing and/or shearing hazards.

© ISO 2020 – All rights reserved

Documents
Document Sharing Hub
Full document details: BS EN ISO 20430:2020

The guards mentioned above are not necessary where the hazardous moving parts are safeguarded by distance guards in accordance with ISO 13857:2008, Table 1 and where there is no splashing hazard.

On machines with both a horizontal injection unit and a vertical injection unit, additional guards shall be provided unless the guards surrounding the machine already prevent the splashing hazard.

If changing the plasticizing screw or the non-return valve/check ring valve (backflow lock for the melt) requires the nozzle guard to be opened or the injection unit to be positioned outside the nozzle guard, the movement of the plasticizing screw and the injection unit shall only be possible:

— in manual mode, that shall be selected according to ISO 12100:2010, 6.2.11.10; and

— by means of a hold-to-run control device providing a safety function in accordance with PL_r = b; and

— with the speed of the linear movement limited ≤ 33 mm/s; and

— 10 % of the maximum speed as maximum for rotational movement.

When the interlocking guard is opened gravity fall of inclined/vertical plasticizing screw/piston shall be prevented by a restraint device, e.g. a non-return valve/check valve or a mechanically actuated shut-off nozzle, if this can create a dangerous ejection of hot plasticized material.

See also 6.2.14.

4.5.2 Thermal hazards

Hazards generated by hot plasticized material coming from the nozzle shall be prevented by the guards described in 4.5.1.

When the interlocking guard is opened gravity fall of inclined/vertical plasticizing screw/piston shall be prevented by a restraint device, e.g. a non-return valve/check valve or a mechanically actuated shut-off nozzle, if this can create a dangerous ejection of hot plasticized material.

See also 6.2.14.

4.6 Injection unit area

4.6.1 Mechanical hazards

Access through the feed opening to the crushing, shearing and/or drawing-in points at the plasticizing screw and/or the injection piston shall be prevented by:

a) guards, applying ISO 13857:2008, Table 1 and 4 (e.g. by the presence of a permanently fixed hopper or feeding system acting as a distance guard); or

b) enclosing guards, applying ISO 13857:2008, Table 4; or

c) interlocking guards in accordance with Protective Type I or PL_r = c (e.g. removable hopper acting as an interlocking guard) or light curtain (if there is no splashing hazard) to prevent any hazardous movement in case of access via the feed opening to hazardous point; or

d) applying the following dimensions:

   — the diameter of a round or side length of a rectangular feed opening shall be smaller than or equal to 50 mm and the distance between the feed opening and the plasticizing screw shall be at least 120 mm; or

   — if the diameter of a round or side length of a rectangular opening is bigger than 50 mm, parallel bars shall be installed to reduce the dimensions of the opening, with a maximum distance of 25 mm between 2 adjacent bars, and a minimum distance of 120 mm between the bars and the plasticizing screw.

© ISO 2020 – All rights reserved
Documents
Document Sharing Hub
Full document details: BS EN ISO 20430:2020

Where the minimum gap between the fixed platen and the hopper or any part of the injection unit at a height between 1 300 mm to 1 700 mm above the floor is less than 300 mm for the head (see ISO 13854:2017):

— a fixed distance guard or an enclosing guard, an interlocking guard or a protective device (e.g. light curtain) in accordance with PL_r = c shall be installed; and

— if an interlocking guard is used, it may be the same as the one specified in 4.5.1 provided that also the injection unit area is covered; and

— opening the interlocking guard or actuating the protective device shall stop the forward movement of the injection unit; and

— movements of the injection unit when the guard is opened or the protective device is actuated shall only be possible:

  — in manual mode that shall be selected according to ISO 12100:2010, 6.2.11.10; and

  — by means of a hold-to-run control device providing a safety function in accordance with PL_r = c; and

  — with the speed of the movement limited to ≤ 33 mm/s; and

  — with an unobstructed view to the hazard zone.

Hazards due to movement of the drive mechanisms of parts of the injection unit shall be prevented by:

— safety distances in accordance with ISO 13857:2008, Table 1 and Table 4; or

— fixed guards; or

— interlocking guards in accordance with Protective Type I or PL_r = c (e.g. removable hopper acting as an interlocking guard) or light curtain to prevent any hazardous movement in case of access via the feed opening to the hazard.

See also 6.2.14.

4.6.2 Thermal hazards

The requirements in accordance with 4.5.2 shall be met.

Heat insulation of the plasticizing and/or injection barrels shall be provided so that, for a barrel temperature of 240 °C, the temperature of the surface of the insulation does not exceed the limit values in accordance with ISO 13732-1:2006 considering a contact period of 1 s.

Surface temperature reduction can be achieved by direct insulation of the barrel in the immediate vicinity of the heater bands or by distance guards, covering the full length of the plasticizing and/or injection barrels. If this guarding incorporates a movable guard, an additional direct insulation of the heater bands is necessary. This additional insulation needs not to meet the requirements of ISO 13732-1:2006.

Additional direct insulation at the heater band next to the nozzle is not necessary if:

— the interlocking guard of the nozzle area prevents access to this heater band when the nozzle is in the operative position; or

— the distance guard covering the plasticizing and/or injection barrels is designed to prevent access to this heater band when its movable guard is closed.

Hazards due to the plasticized material being released from the vent opening shall be prevented by a guard able to contain this plasticized material.

See 6.2.14.

© ISO 2020 – All rights reserved

Documents
Document Sharing Hub
Full document details: BS EN ISO 20430:2020

4.6.3 Mechanical and/or thermal hazards

The temperature of the plasticizing and/or injection barrels shall be automatically monitored to ensure that the temperature does not exceed the maximum permissible value set by the manufacturer with regard to the mechanical strength of the barrel (see 6.2.14).

The energy supply to all heating elements of the barrel shall be automatically interrupted in the following cases:

— maximum permissible limit value is reached;

— a fault in the temperature control.

These requirements do not apply to injection moulding machines designed for processing material which does not create splashing hazard during processing or when the heating system is such that the maximum limit value allowed by the mechanical strength of the barrel cannot be exceeded.

4.7 Discharge area

Access to any hazardous movement through the discharge aperture shall be prevented by one of the following measures:

a) by meeting the limits for the dimensions shown in Figure 12 in any direction by using fixed guards if necessary, with:

— $b \geq 550$ mm for $a < 100$ mm;

— $b \geq (550 \text{ mm} - a)$ for $a \geq 100$ mm; or

b) interlocking guards in accordance with Protective Type I or $PL_r = c$; or

c) AOPD in accordance with IEC 61496-1:2012, Type 2.

These safeguards shall not be used to re-initiate a cycle.

Dimensions in millimetres

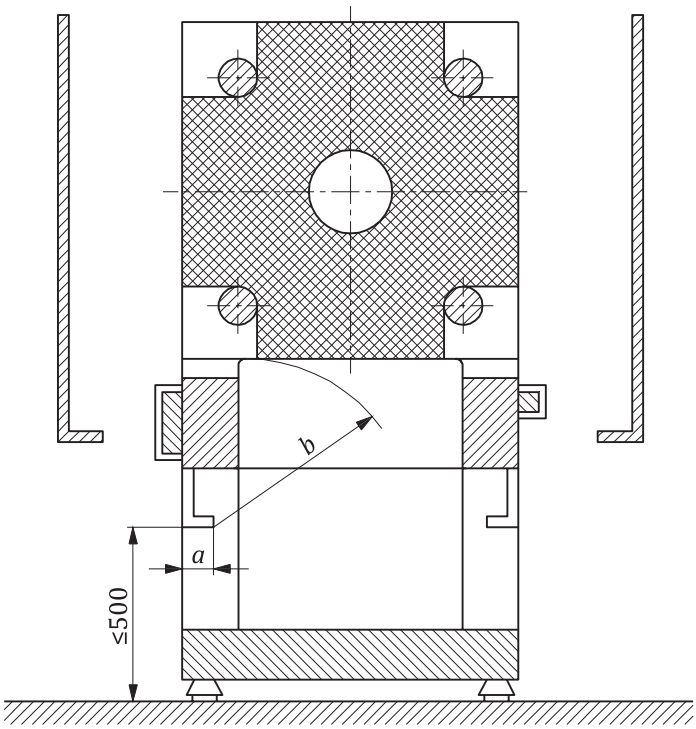

Figure 12 — Dimensions of the discharge area

© ISO 2020 – All rights reserved
Documents
Document Sharing Hub
Full document details: BS EN ISO 20430:2020

4.8 Safety requirements and/or protective measures against hazards not associated with a particular area of the machine

4.8.1 Hazards due to flexible hoses

For flexible hoses with pressures higher than 5 MPa (725 psig) for hydraulics and higher than 1 MPa (145 psig) for pneumatics the following shall apply:

— hose assemblies shall be manufactured only using hose fittings whose correct functioning has been verified in accordance with the relevant product standard and shall be rated for the intended use;

— hazardous hose whip shall be prevented by:

  — enclosing guards (see ISO 14120:2015); or

  — additional attachment of the hoses e.g. by chains, cables or brackets; or

  — hose assembly types fulfilling proof pressure hold test according to ISO 1402:2009, 8.1;

— the ratio of the burst pressure of the hose and fitting to the maximum working pressure in the fluid circuit shall be in accordance with ISO 7751:2016, Table 1; and

— to prevent unintentional detachment from connection points, cutting ring fittings for hose assembly shall not be used. Appropriate connections can be flanged joints, flared unions or conical nipple connections.

See also 6.2.17.

4.8.2 Release of fluids under pressure

To prevent the uncontrolled release of fluids under pressure, hydraulic and pneumatic equipment shall be designed in accordance with ISO 12100:2010, 6.2.10, ISO 4413:2010 and ISO 4414:2010.

To prevent release of pressurised fluids from hose assemblies, the requirements listed in 4.8.1 for flexible hoses and their connections shall be met.

4.8.3 Hazards during adjustment and maintenance

If special tools and equipment not commonly available on the market is needed for adjustment or maintenance operations that shall be carried out by the user (e.g. for fitting the tie-bar nuts, changing of the plasticizing screw or barrel, adjustment of the timing belts), these shall be made available by the machine manufacturer.

See also 6.2.18

4.8.4 Electrical hazards and hazards due to electromagnetic interference

4.8.4.1 General

The electrical equipment of the machine shall be in accordance with the relevant requirements of IEC 60204-1:2016.

NOTE See the Foreword of IEC 60204-1:2016 for differing practices in some countries.

In particular the following requirements shall be adopted:

4.8.4.2 Basic protection

Protection against direct contact shall be in accordance with IEC 60204-1:2016, 6.2.

© ISO 2020 – All rights reserved

Documents
Document Sharing Hub
Full document details: BS EN ISO 20430:2020

4.8.4.3 Fault protection

Protection against indirect contact shall be in accordance with IEC 60204-1:2016, 6.3.

4.8.4.4 Protection against ingress of solids and liquids

Electrical equipment shall have enclosures affording protection in accordance with IEC 60204-1:2016, 11.3.

4.8.4.5 Protection against electromagnetic interference

The electrical circuit of the machine shall have a sufficient level of immunity to electromagnetic disturbances so it can function in its environment. During installation of electrical and electronic components, the machine manufacturer shall follow the wiring recommendations for installation and use provided by the component manufacturer.

4.8.5 Thermal hazards

To prevent burns due to unintentional contact with heat conditioning hoses and fittings, fixed guards or insulation shall be provided for parts accessible outside of the areas protected by guards, where the maximum operating temperature can exceed the limit values determined in accordance with ISO 13732-1:2006 considering a contact period of 1 s.

Injury caused by escaping fluids from uncovered heat conditioning hoses and fittings shall be prevented by guards.

4.8.6 Hazards generated by noise

Injection moulding machines shall be designed and constructed so that risks resulting from the emission of airborne noise are reduced.

The main sources of noise are:

— the hydraulic system, especially during injection;

— moving mechanical parts;

— air release.

NOTE 1 ISO/TR 11688-1:1995 gives useful information on the design on low noise machinery.

NOTE 2 ISO/TR 11688-2:1998 gives useful information on noise generating mechanisms in machinery.

For the hydraulic system, noise reduction can be achieved by selecting low-noise emission components. Noise reduction for the pneumatic system can be achieved by the application of vent silencers. Additional noise reduction can be achieved by using low-noise drive components or partial or complete enclosure. Other noise reduction measures with similar or higher efficiency can be used.

See 6.2.24 and Annex I.

4.8.7 Hazards generated by gases, fumes and dusts

The machine shall be designed in a way that an exhaust system can be fitted or positioned for the extraction of harmful substances.

See also 6.2.19.

© ISO 2020 – All rights reserved
Documents
Document Sharing Hub
Full document details: BS EN ISO 20430:2020

4.8.8 Slip, trip and fall hazards

The manufacturer shall provide permanent safe means of access in accordance with ISO 14122-1:2016, ISO 14122-2:2016, ISO 14122-3:2016 and ISO 14122-4:2016. If this is not possible due to technical or functional reasons, the machine shall be designed so that it is possible to use a non-permanent safe means of access which shall be provided by the manufacturer (see 6.2.20).

Designated access positions and designated working positions on the machine shall be:

— indicated on the general layout of the machine supplied to customer (see 6.2.21); and

— designed to minimize the hazard of slipping and tripping due to granules and oil leakages; and

— designed to minimize the hazard of falling from heights ≥1 000 mm above floor level.

Surfaces which are not safe to access that can be wrongly considered a designated access position shall be marked with a prohibition sign.

4.8.9 Hydraulic and pneumatic systems

Hydraulic and pneumatic systems shall be designed in accordance with ISO 4413:2010 and ISO 4414:2010.

See also 6.2.23.

4.8.10 Power-operated guards

For power-operated guards, the contact forces to which an operator can be exposed to shall not exceed 300 N.

Where the contact force exceeds 75 N, a pressure-sensitive edge in accordance with ISO 13856-2:2013 shall be supplied. Actuation of the pressure-sensitive edge shall stop the closing movement of the guard in accordance with PL_r = c.

In addition, where the contact force exceeds 150 N:

— actuation of the pressure-sensitive edge shall allow the reversing movement without creating any additional hazards; and

— closing of the guard shall be achieved by a hold-to-run control device providing a safety function in accordance with PL_r = b.

The actuator to close the guard shall be positioned so as to give the operator a clear view of the hazard zone.

If there is a failure in the power supply to the operation of the guard, any hazardous movement of the guard due to gravity shall be prevented.

4.8.11 Hazards due to unintentionally interrupted forward movement of the screw/piston

If the forward movement of the screw/piston is interrupted unintentionally, a visual and/or audible alarm shall be generated.

See 6.2.16.

© ISO 2020 – All rights reserved

Documents
Document Sharing Hub
Full document details: BS EN ISO 20430:2020

4.9 Additional safety requirements and/or protective measures associated with specific machine design

4.9.1 Shuttle-table machines/machines with sliding table/platen and turn-table machines and carousel machines

Access to movements of the table/sliding platen/carousel shall be prevented by one or more of the following safeguards:

— fixed guards;

— interlocking guards in accordance with Protective Type II or PL_r = d;

— light curtain in accordance with IEC 61496-1:2012, Type 2, acting on a control in accordance with Protective Type II or PL_r = d;

— scanners in accordance with IEC 61496-3:2008, Type 3, acting on a control circuit PL_r = d;

— pressure-sensitive mats or floors in accordance with ISO 13856-1:2013 and PL_r = d;

— two-hand control devices in accordance with ISO 13851:2002, Type III B, acting on a control circuit with PL_r = d.

Opening the interlocking guard, interrupting the light curtain or scanner, or actuating the pressure-sensitive mat or floor, or releasing a manual actuator of the two-hand control device shall stop the hazardous movement of the table/sliding platen/carousel. On machines with horizontal axis of rotation, unintentional movement due to the imbalance of the rotating table during mould changing shall be automatically prevented (e.g. by a mechanical pin, motor brake).

For machines where a horizontal distance between the carousel/table/sliding platen and a safeguard is >100 mm for guards or >150 mm for light curtains, additional safeguards as specified in 4.2.7 shall be used.

If safeguards also serve as a guard for the mould area, the safeguards shall also comply with the relevant requirements in 4.2.

Where pressure-sensitive mats or floors are used to stop hazardous movement, the size of the sensing area of pressure-sensitive mats or floors shall be in accordance with ISO 13855:2010.

Where vertical movement of the shuttle-table is possible, gravity descent of the shuttle-table shall be prevented as described in 4.1.9.

4.9.2 Multi-station machines with mobile injection unit

Access to movements of the mobile injection unit between the clamping units shall be prevented by fixed guards and/or interlocking guards in accordance with Protective Type II or PL_r = d.

Where the interlocking guards also allow access to the mould area, the requirements specified in 4.2 shall also apply.

For machines where a horizontal distance between the guard and the mobile injection unit is >100 mm, safeguards as specified in 4.2.7 shall be used.

4.9.3 Cellular foam injection moulding machines

On cellular foam injection moulding machines, injection units with shut-off nozzles which automatically close when the interlocking guards are opened shall be used. The interlocking shall be in accordance with:

— Protective Type II or PL_r = d for the guards for the mould area; and

— Protective Type I or PL_r = c for the guard for the nozzle area.

© ISO 2020 – All rights reserved
Documents
Document Sharing Hub
Full document details: BS EN ISO 20430:2020