BS EN ISO 21083-1:2018

BSI Standards Publication

Test method to measure the efficiency of air filtration media against spherical nanomaterials

Part 1: Size range from 20 nm to 500 nm (ISO 21083-1:2018)

Documents
Document Sharing Hub

Full document details: BS EN ISO 21083-1:2018

National foreword

This British Standard is the UK implementation of EN ISO 21083-1:2018.

The UK participation in its preparation was entrusted to Technical Committee MCE/21, Filters for gases and liquids.

A list of organizations represented on this committee can be obtained on request to its secretary.

This publication does not purport to include all the necessary provisions of a contract. Users are responsible for its correct application.

© The British Standards Institution 2018
Published by BSI Standards Limited 2018

ISBN 978 0 580 95177 0

ICS 91.140.30

Compliance with a British Standard cannot confer immunity from legal obligations.

This British Standard was published under the authority of the Standards Policy and Strategy Committee on 31 December 2018.

Amendments/corrigenda issued since publication

Date	Text affected

Documents
Document Sharing Hub

Full document details: BS EN ISO 21083-1:2018

EUROPEAN STANDARD

NORME EUROPÉENNE

EUROPÄISCHE NORM

EN ISO 21083-1

December 2018

ICS 91.140.30

English Version

Test method to measure the efficiency of air filtration media against spherical nanomaterials - Part 1: Size range from 20 nm to 500 nm (ISO 21083-1:2018)

Méthode d'essai pour mesurer l'efficacité des médias de filtration d'air par rapport aux nanomatériaux sphériques - Partie 1: Spectre granulométrique de 20 nm à 500 nm (ISO 21083-1:2018)

Prüfverfahren zur Messung der Effizienz von Luftfiltrationsmedien gegen sphärische Nanomaterialien - Teil 1: Partikelgrößenbereich von 20 nm bis 500 nm (ISO 21083-1:2018)

This European Standard was approved by CEN on 19 November 2018.

CEN members are bound to comply with the CEN/CENELEC Internal Regulations which stipulate the conditions for giving this European Standard the status of a national standard without any alteration. Up-to-date lists and bibliographical references concerning such national standards may be obtained on application to the CEN-CENELEC Management Centre or to any CEN member.

This European Standard exists in three official versions (English, French, German). A version in any other language made by translation under the responsibility of a CEN member into its own language and notified to the CEN-CENELEC Management Centre has the same status as the official versions.

CEN members are the national standards bodies of Austria, Belgium, Bulgaria, Croatia, Cyprus, Czech Republic, Denmark, Estonia, Finland, Former Yugoslav Republic of Macedonia, France, Germany, Greece, Hungary, Iceland, Ireland, Italy, Latvia, Lithuania, Luxembourg, Malta, Netherlands, Norway, Poland, Portugal, Romania, Serbia, Slovakia, Slovenia, Spain, Sweden, Switzerland, Turkey and United Kingdom.

EUROPEAN COMMITTEE FOR STANDARDIZATION
COMITÉ EUROPÉEN DE NORMALISATION
EUROPÄISCHES KOMITEE FÜR NORMUNG

CEN-CENELEC Management Centre: Rue de la Science 23, B-1040 Brussels

© 2018 CEN All rights of exploitation in any form and by any means reserved worldwide for CEN national Members.

Ref. No. EN ISO 21083-1:2018 E

Documents
Document Sharing Hub

Full document details: BS EN ISO 21083-1:2018

European foreword

This document (EN ISO 21083-1:2018) has been prepared by Technical Committee ISO/TC 142 "Cleaning equipment for air and other gases" in collaboration with Technical Committee CEN/TC 195 “Air filters for general air cleaning” the secretariat of which is held by UNI.

This European Standard shall be given the status of a national standard, either by publication of an identical text or by endorsement, at the latest by June 2019, and conflicting national standards shall be withdrawn at the latest by June 2019.

Attention is drawn to the possibility that some of the elements of this document may be the subject of patent rights. CEN shall not be held responsible for identifying any or all such patent rights.

This document has been prepared under a mandate given to CEN by the European Commission and the European Free Trade Association.

According to the CEN-CENELEC Internal Regulations, the national standards organizations of the following countries are bound to implement this European Standard: Austria, Belgium, Bulgaria, Croatia, Cyprus, Czech Republic, Denmark, Estonia, Finland, Former Yugoslav Republic of Macedonia, France, Germany, Greece, Hungary, Iceland, Ireland, Italy, Latvia, Lithuania, Luxembourg, Malta, Netherlands, Norway, Poland, Portugal, Romania, Serbia, Slovakia, Slovenia, Spain, Sweden, Switzerland, Turkey and the United Kingdom.

Endorsement notice

The text of ISO 21083-1:2018 has been approved by CEN as EN ISO 21083-1:2018 without any modification.

AVA Documents
Document Sharing Hub

Full document details: BS EN ISO 21083-1:2018

Contents

Page

Foreword ..... **v**

Introduction ..... **vi**

1 Scope **1**

2 Normative references **1**

3 Terms, definitions, symbols and abbreviated terms **1**
3.1 Terms and definitions 1
3.2 Symbols and abbreviated terms 2

4 Principle **3**

5 Test materials **4**
5.1 General 4
5.2 Liquid phase aerosol 4
5.2.1 DEHS test aerosol 4
5.2.2 Liquid phase aerosol generation 5

6 Test setup **6**
6.1 General 6
6.2 Specification of setup 8
6.2.1 Aerosol generation system 8
6.2.2 Tubing 8
6.2.3 Dryer 8
6.2.4 DEMC 9
6.2.5 Equilibrium charge distribution and neutralization of aerosol particles 11
6.2.6 Neutralization of aerosol particles 11
6.2.7 Make-up air line 12
6.2.8 Test filter medium mounting assembly 13
6.2.9 CPC 14
6.2.10 Final filter 16
6.3 Detailed setup for test using DEHS particles 16
6.4 Determination of the filter medium velocity 17

7 Qualification of the test rig and apparatus **17**
7.1 CPC tests 17
7.1.1 CPC — Air flow rate stability test 17
7.1.2 CPC — Zero test 18
7.1.3 CPC — Overload test 18
7.1.4 Counting accuracy calibration 18
7.2 DEMC tests 21
7.3 Qualification of aerosol neutralization 21
7.3.1 General 21
7.3.2 Qualification of neutralization by checking the multiple charge fraction on the particles passing through the neutralizer 21
7.3.3 Qualification of the aerosol neutralizer using corona discharge balanced output 21
7.3.4 Qualification of neutralization according to ISO/TS 19713-1 22
7.4 System leak checks 22
7.4.1 Air leakage tests 22
7.4.2 Visual detection by cold smoke 22
7.4.3 Pressurization of the test system 22
7.4.4 Use of high efficiency filter media 22
7.5 Uniformity of the test aerosol concentration 22

8 Test procedure **23**
8.1 Determination of the correlation ratio/zero efficiency test 23
8.2 Protocol of filtration efficiency measurement 24

AVA Documents
Document Sharing Hub

© ISO 2018 – All rights reserved

Full document details: BS EN ISO 21083-1:2018

8.2.1 Preparatory checks ... 24
8.2.2 Equipment preparation ... 24
8.2.3 Aerosol generator ... 24
8.2.4 Aerosol generator — Neutralizer ... 25
8.2.5 Filter medium neutralization ... 26
8.2.6 Filter medium neutralization according to ISO 29461-1 ... 26
8.2.7 Air flow measurement ... 28
8.2.8 Measurement of the pressure drop ... 29
8.2.9 Zero count test ... 29
8.2.10 Air leakage test ... 29
8.2.11 Loading effect test ... 29
8.2.12 Reported values ... 29
8.2.13 Measurement of filtration efficiency — DEHS particles ... 29
8.3 Test evaluation ... 31
8.4 Measurement protocol for one sample — Summary ... 31
8.4.1 Using one CPC to measure the upstream and downstream particle concentrations ... 31
8.4.2 Using two CPCs to measure the upstream and downstream particle concentrations ... 32

9 Maintenance items ... 33

10 Measurement uncertainties ... 34

11 Reporting results ... 35
11.1 General ... 35
11.2 Required reporting elements ... 35
11.2.1 General ... 35
11.2.2 Report summary ... 35
11.2.3 Report Details ... 36

Annex A (informative) **Instruments specifications ... 40**

Annex B (informative) **Statistical analysis for precision of an experiment (according to ISO 5725-2) ... 44**

Annex C (informative) **Safe use of IPA ... 49**

Annex D (informative) **Safe handling of radioactive devices ... 50**

Bibliography ... 51

© ISO 2018 – All rights reserved

Documents
Document Sharing Hub
Full document details: BS EN ISO 21083-1:2018

Foreword

ISO (the International Organization for Standardization) is a worldwide federation of national standards bodies (ISO member bodies). The work of preparing International Standards is normally carried out through ISO technical committees. Each member body interested in a subject for which a technical committee has been established has the right to be represented on that committee. International organizations, governmental and non-governmental, in liaison with ISO, also take part in the work. ISO collaborates closely with the International Electrotechnical Commission (IEC) on all matters of electrotechnical standardization.

The procedures used to develop this document and those intended for its further maintenance are described in the ISO/IEC Directives, Part 1. In particular, the different approval criteria needed for the different types of ISO documents should be noted. This document was drafted in accordance with the editorial rules of the ISO/IEC Directives, Part 2 (see www.iso.org/directives).

Attention is drawn to the possibility that some of the elements of this document may be the subject of patent rights. ISO shall not be held responsible for identifying any or all such patent rights. Details of any patent rights identified during the development of the document will be in the Introduction and/or on the ISO list of patent declarations received (see www.iso.org/patents).

Any trade name used in this document is information given for the convenience of users and does not constitute an endorsement.

For an explanation of the voluntary nature of standards, the meaning of ISO specific terms and expressions related to conformity assessment, as well as information about ISO's adherence to the World Trade Organization (WTO) principles in the Technical Barriers to Trade (TBT) see www.iso.org/iso/foreword.html.

This document was prepared by the European Committee for Standardization (CEN) Technical Committee CEN/TC 195, *Air filters for general cleaning*, in collaboration with ISO Technical Committee TC 142, *Cleaning equipment for air and other gases*, in accordance with the Agreement on technical cooperation between ISO and CEN (Vienna Agreement).

A list of all parts in the ISO 21083 series can be found on the ISO website.

Any feedback or questions on this document should be directed to the user's national standards body. A complete listing of these bodies can be found at www.iso.org/members.html.

© ISO 2018 – All rights reserved

Documents
Document Sharing Hub
Full document details: BS EN ISO 21083-1:2018

Introduction

Nano-objects are discrete piece of material with one, two or three external dimensions in the nanoscale (see ISO/TS 80004-2) and are building blocks of nanomaterials. Nanoparticles, referring to particles with at least one dimension below 100 nm, generally have a higher mobility than larger particles. Because of their higher mobility and larger specific surface area, available for surface chemical reactions, they can pose a more serious health risk than larger particles. Thus, particulate air pollution with large concentrations of nanoparticles can result in an increased adverse effect on human health and an increased mortality (see Reference [17]).

With the increased focus on nanomaterials and nanoparticles, the filtration of airborne nanoparticles is also subject to growing attention. Aerosol filtration can be used in diverse applications, such as air pollution control, emission reduction, respiratory protection for human and processing of hazardous materials. The filter efficiency can be determined by measuring the testing particle concentrations upstream and downstream of the filter. The particle concentration may be based on mass, surface area or number. Among these, the number concentration is the most sensitive parameter for nanoparticle measurement. State-of-the-art instruments enable accurate measurement of the particle number concentration in air and therefore precise fractional filtration efficiency. Understanding filtration efficiency for nanoparticles is crucial in schemes to remove nanoparticles, and thus, in a wider context, improve the general quality of the environment, including the working environment.

A large number of standards for testing air filters exist such as the ISO 29463 series and the ISO 16890 series. The test particle range in the ISO 29463 series is between 0,04 µm and 0,8 µm, and the focus is on measurement of the minimum efficiency at the most penetrating particle size (MPPS). The test particle range in the ISO 16890 series is between 0,3 µm and 10 µm. The ISO 21083 series aims to standardize the methods of determining the efficiencies of filter media, of all classes, used in most common air filtration products and it focuses on filtration efficiency of airborne nanoparticles, especially for particle size down to single-digit nanometres.

© ISO 2018 – All rights reserved
Documents
Document Sharing Hub
Full document details: BS EN ISO 21083-1:2018

Test method to measure the efficiency of air filtration media against spherical nanomaterials —

Part 1: Size range from 20 nm to 500 nm

1 Scope

This document specifies the testing instruments and procedure for determining the fractional filtration efficiencies of flat sheet filter medium against airborne nanoparticles in the range of 20 nm to 500 nm. The testing methods in this document are limited to spherical or nearly-spherical particles to avoid uncertainties due to the particle shape.

2 Normative references

The following documents are referred to in the text in such a way that some or all of their content constitutes requirements of this document. For dated references, only the edition cited applies. For undated references, the latest edition of the referenced document (including any amendments) applies.

ISO 5167 (all parts), *Measurement of fluid flow by means of pressure differential devices inserted in circular cross-section conduits running full*

ISO 5725-2, *Accuracy (trueness and precision) of measurement methods and results — Part 2: Basic method for the determination of repeatability and reproducibility of a standard measurement method*

ISO 15900, *Determination of particle size distribution — Differential electrical mobility analysis for aerosol particles*

ISO 27891, *Aerosol particle number concentration — Calibration of condensation particle counters*

ISO 29463-1, *High efficiency filters and filter media for removing particles from air — Part 1: Classification, performance, testing and marking*

ISO 29464, *Cleaning of air and other gases — Terminology*

3 Terms, definitions, symbols and abbreviated terms

3.1 Terms and definitions

For the purposes of this document, the terms and definitions given in ISO 5725-2, ISO 15900, ISO 27891 and ISO 29464 apply.

ISO and IEC maintain terminological databases for use in standardization at the following addresses:

— ISO Online browsing platform: available at http://www.iso.org/obp

— IEC Electropedia: available at http://www.electropedia.org/

© ISO 2018 – All rights reserved

Documents
Document Sharing Hub
Full document details: BS EN ISO 21083-1:2018

3.2 Symbols and abbreviated terms

3.2.1 Symbols

Symbol	Definition
A	Source strength of the radioactive source
A_0	Original source strength of the radioactive source
A_f	Effective filtration surface area
C_{up}	Particle concentration upstream of the filter medium
$C_{up,i}$	Concentration of particles with the i_{th} monodisperse size upstream of the filter medium
C_{down}	Particle concentration downstream of the filter medium
$C_{down,i}$	Concentration of particles with the i_{th} monodisperse size downstream of the filter medium
C_{ni}	Concentration of particles after the second DEMC for the particles with i charge(s)
d_d	Diameter of the initial droplet including the solvent
d_p	Diameter of the testing particle after complete evaporation of the solvent
E	Filtration efficiency of the test filter medium
E_i	Filtration efficiency of the test filter medium against the particles with the i_{th} monodisperse size
e	Charge of an electron
φ_v	Volume fraction of DEHS in the solution
$t_{0,5}$	Half-life of the radioactive source
N_{up}	Total count of particles upstream of the filter medium in a certain user-defined time interval
$N_{up,i}$	Counts of particles with the i_{th} monodisperse size upstream of the filter medium in a certain user-defined time interval
N_{down}	Total count of particles downstream of the filter medium in a certain user-defined time interval
$N_{down,i}$	Counts of particles with the i_{th} monodisperse size downstream of the filter medium in a certain used-defined time interval
N_{ni}	Total count of particles after the second DEMC for the particles with i charge(s)
n_p	Number of elementary charges
P	Fractional penetration of the test filter medium
P_i	Fractional penetration of particles with the i_{th} monodisperse size for the test filter medium
P_m	Penetration with the filter medium, before applying the correlation ratio
$P_{m,i}$	Measured penetration against particles with the i_{th} monodisperse size when the filter medium is installed in the filter medium holder, before applying the correlation ratio
q	Flow rate through the filter medium
q_e	Air flow rate through the electrometer
R	Correlation ratio
R_i	Correlation ratio for the i_{th} monodisperse particle size, obtained as the penetration without the filter media
R_{es}	Resistance of resistor
t	Time
v_f	Filter medium velocity
V	Voltage
x	Volume of the sampled air
α	Angle for the transition section in the filter medium holder
Δp	Pressure drop across the filter medium
E_0	Initial particulate efficiency of media sample
ΔE_c	Difference in particulate efficiency between E_0 and conditioned efficiency of the media sample
λ	Radioactive decay constant equal to $0{,}693/t_{0,5}$

© ISO 2018 – All rights reserved
Documents
Document Sharing Hub
Full document details: BS EN ISO 21083-1:2018

3.2.2 Abbreviated terms

AC	Alternating current
CAS	Chemical abstracts service
CL	Concentration limit
CPC	Condensation particle counter
DEHS	Di(2-ethylhexyl) sebacate
DEMC	Differential electrical mobility classifier
DMAS	Differential mobility analysing system
HEPA	High efficiency particulate air
Kr	Krypton
IPA	Isopropyl alcohol
MPPS	Most penetrating particle size
Po	Polonium
PSL	Polystyrene latex
RH	Relative humidity
SRM	Standard reference material

4 Principle

The filtration efficiency of the filter medium is determined by measuring the particle number concentrations upstream and downstream of the filter medium. The fractional penetration, *P*, represents the fraction of aerosol particles which can go through the filter medium, defined as:

$$P = C_{\text{down}} / C_{\text{up}} \tag{1}$$

where C_{down} and C_{up} are the particle concentrations downstream and upstream of the filter medium, respectively. Another way is to measure the particle counts upstream and downstream of the filter medium for a certain same user-defined time interval and sampling volume rate. Then the penetration is the ratio between the downstream count N_{down} and upstream count N_{up}:

$$P = N_{\text{down}} / N_{\text{up}} \tag{2}$$

© ISO 2018 – All rights reserved

Documents
Document Sharing Hub
Full document details: BS EN ISO 21083-1:2018

The filter medium efficiency, E, is the fraction of aerosol particles removed by the filter medium:

$$E = 1 - P \tag{3}$$

The filter medium efficiency is dependent on the challenge particle size. If the test is performed with a number of monodisperse particles with different sizes, the expression for the penetration of particles with the i_{th} monodisperse size P_i can be written as:

$$P_i = C_{\text{down},i} / C_{\text{up},i} \tag{4}$$

where $C_{\text{up},i}$ and $C_{\text{down},i}$ are the concentrations of particles with the i_{th} monodisperse size upstream and downstream of the filter medium, respectively. If the measurement is performed with the particle number count, P_i can be written as:

$$P_i = N_{\text{down},i} / N_{\text{up},i} \tag{5}$$

where $N_{\text{up},i}$ and $N_{\text{down},i}$ are the counts of particles with the i_{th} monodisperse size upstream and downstream of the filter medium in the same user-defined time interval and sampling volume rate, respectively. Correspondingly, the filtration efficiency E_i of the test filter medium against the particles with the i_{th} monodisperse size is:

$$E_i = 1 - P_i \tag{6}$$

The test aerosol from the aerosol generator is conditioned (e.g. evaporation of the solvent) and then neutralized. The particles are mixed homogeneously with filtered test air if necessary to achieve desired concentration and flow rate, before they are used to challenge the test filter medium.

A specimen of the sheet filter medium is fixed in a test filter assembly and subject to the test air flow corresponding to the prescribed filter medium velocity. Partial flow, which is the flow that the CPC operates with, of the test aerosol is sampled upstream and downstream of the filter medium, and the fractional penetration is determined from the upstream and downstream number concentrations or total numbers in user-defined time intervals. Furthermore, the measurement of the pressure drop across the filter medium is made at the prescribed filter medium velocity.

Additional equipment is required to measure the absolute pressure, temperature and RH of the test air. It is also needed to measure and control the air volume flow rate.

5 Test materials

5.1 General

Any aerosol used to test the filtration performance according to this test method shall only be introduced to the test section as long as needed to test the filtration performance properties of the test filter medium without changing the filtration performance properties of the subject filter medium due to loading, charge neutralization or other physical or chemical reaction.

5.2 Liquid phase aerosol

5.2.1 DEHS test aerosol

Test liquid aerosol of DEHS, as an example, is widely used in the testing of filters. DEHS aerosols are spherical in shape. Experiments conducted by comparing DEHS droplets and solid silver nanoparticles in the range of 20 nm to 30 nm demonstrated similar filtration efficiencies with the differences below 8 %[19].

© ISO 2018 – All rights reserved
Documents
Document Sharing Hub
Full document details: BS EN ISO 21083-1:2018

DEHS/DES/DOS – formula:

$C_{26}H_{50}O_4$ or $CH_3(CH_2)_3CH(C_2H_5)CH_2OOC(CH_2)_8COOCH_2CH(C_2H_5)(CH_2)3CH_3$

DEHS properties:

Density	912 kg/m^3
Melting point	225 K
Boiling point	529 K
Flash point	>473 K
Vapour pressure	$1{,}9 \times 10^{-6}$ Pa at 273 K
Refractive index	1,450 at $600 \cdot 10^{-9}$ m wavelength
Dynamic viscosity	0,022 Pa·s to 0,024 Pa·s
CAS number	122-62-3

5.2.2 Liquid phase aerosol generation

5.2.2.1 Principles and specifications

The test aerosol shall consist of pure DEHS in a suitable solvent (for example IPA), or other liquid phase test aerosols in accordance with the producer's specification.

Figure 1 gives an example of a system for generating the aerosol. Into more details, compressed air expands through an orifice to form a high-velocity jet. The liquid is drawn into the atomizing section through a vertical passage and is then atomized by the jet. Large droplets are removed by impaction on the wall opposite the jet and excess liquid is drained at the bottom of the atomizer assembly block. Fine spray leaves the atomizer through a fitting at the top.

Any other generator capable of producing droplets with a minimum concentration of about 1 000 particles per cubic centimetre in the particle size range of 20 nm to 500 nm can be used. The specifications of different atomizers, as examples, are presented in Annex A, Table A.1.

Before testing, regulation of the upstream concentration, to reach a steady state and to have a concentration in the range that the particle counter can measure, shall be carried out.

© ISO 2018 – All rights reserved

Documents
Document Sharing Hub
Full document details: BS EN ISO 21083-1:2018

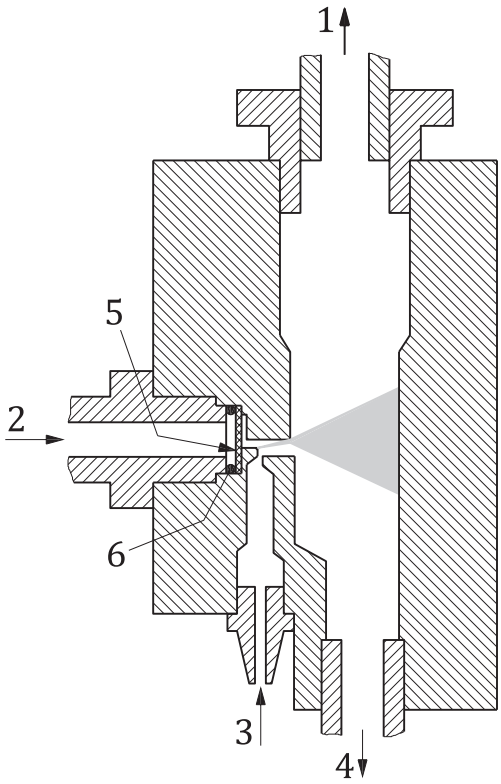

Key

1 aerosol out
2 compressed air in
3 liquid in
4 excess liquid to closed reservoir
5 hole
6 O-ring

Figure 1 — Schematic of the atomizer assembly block

5.2.2.2 Atomizer maintenance

The atomizer shall be kept clean and free of rust. Even though most of the atomizer parts are made of stainless steel, solutes such as sodium chloride will eventually corrode them. In that case, it is recommended to clean and dry the atomizer assembly.

6 Test setup

6.1 General

The test setup is shown in Figure 2 for monodisperse challenge particles and in Figure 3 for polydisperse challenge particles. When the challenge particles are monodisperse the setup consists of the three sections: the one that produces the aerosol particles (which contains the aerosol generator), the particle classification section (which contains the DEMC) and the particle measuring section (which contains the CPC). When the challenging particles are polydisperse, the particle classification shall be performed after sampling the aerosol from the upstream or downstream section.

© ISO 2018 – All rights reserved
Documents
Document Sharing Hub
Full document details: BS EN ISO 21083-1:2018

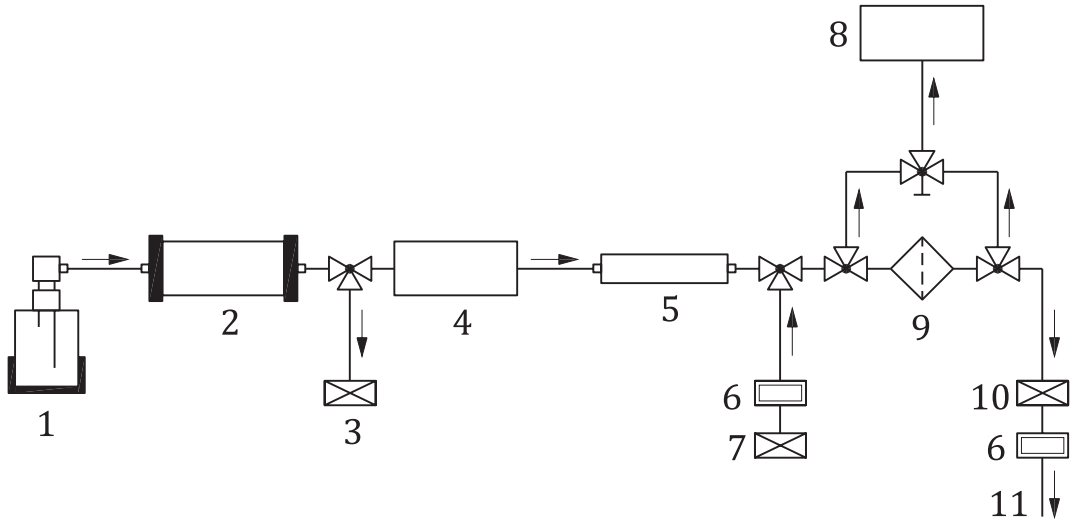

Key

1 atomizer
2 diffusion dryer
3 excess flow with HEPA filter
4 DEMC
5 neutralizer
6 flow controller
7 make-up air with HEPA filter
8 CPC
9 filter medium holder
10 HEPA filter on the exhaust line
11 vacuum

Figure 2 — Test setup for monodisperse challenge particles

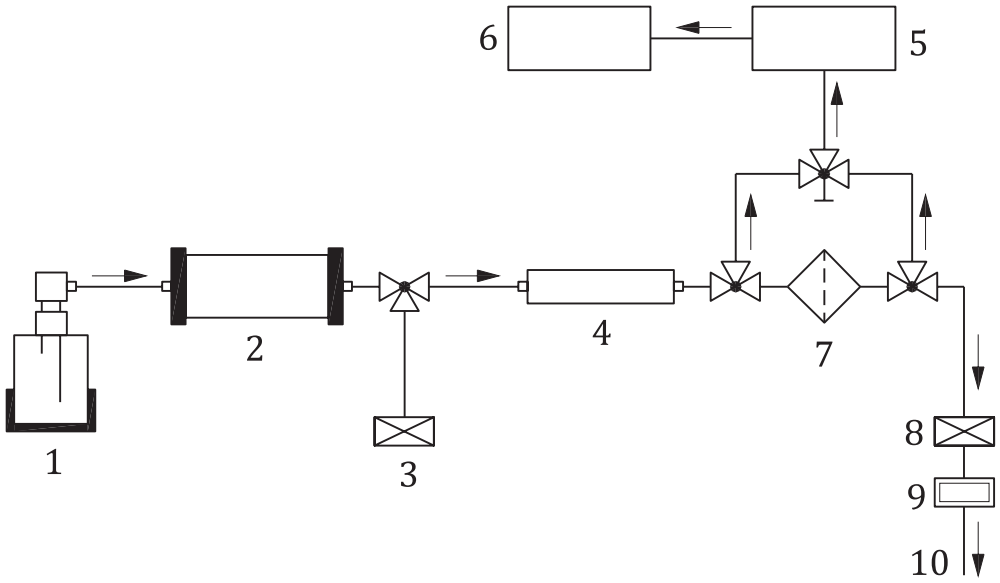

Key

1 atomizer
2 diffusion dryer
3 flow compensation through HEPA filter
4 neutralizer
5 DEMC
6 CPC
7 filter medium holder
8 HEPA filter on the exhaust line
9 flow controller
10 vacuum

Figure 3 — Test setup using polydisperse particles to obtain size resolved fractional filtration efficiency

© ISO 2018 – All rights reserved

Documents
Document Sharing Hub
Full document details: BS EN ISO 21083-1:2018

6.2 Specification of setup

6.2.1 Aerosol generation system

The aerosol generation system is described in 5.2.2.

6.2.2 Tubing

Tubes shall be made of electrically conductive material (stainless steel, carbon embedded silicon tubing, etc.) in order to minimize particle losses due to electrostatic deposition. Furthermore, the tubing length shall be minimized so as to minimize particle losses due to diffusion. The upstream and downstream sample lines shall be nominally identical in geometry and material.

6.2.3 Dryer

6.2.3.1 Principles

In the case of generated aerosol from atomization, the particles coming out of the atomizer may have solvent attached and the solvent shall be evaporated. One approach is to pass the aerosol through a diffusion dryer. The dryer in this document refers to a device which can reduce the vapour pressure of the solvent in the test aerosol flow coming from the atomization process. The diffusion dryer consists of a porous tube for air flow passing through a bed of adsorptive materials, e.g. silica gel. The solvent vapour in the air has high diffusivity and can be adsorbed by the material in the diffusion dryer. For example, silica gel can adsorb IPA which may be used as the solvent for DEHS in the atomizer (see Reference [26]). A diffusion dryer is shown in Figure 4.

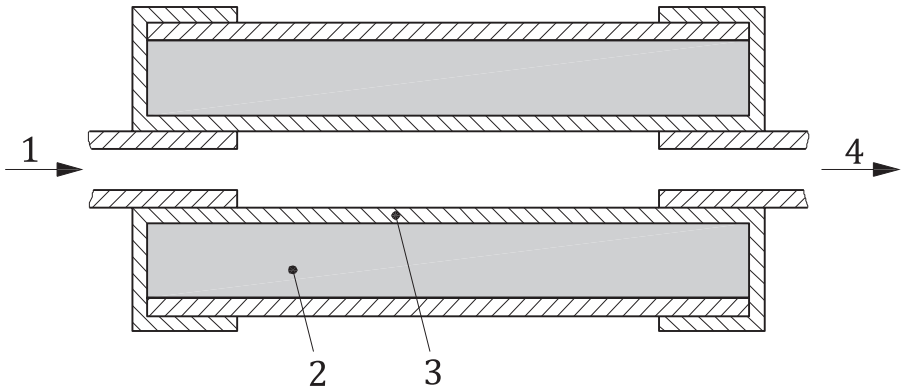

Key

1 aerosol in

2 annular space filled with an adsorptive material to reduce the vapour pressure of the solvent, for example silica gel

3 inner tube made of wire screen

4 aerosol flow with reduced amount of the solvent vapour

Figure 4 — Diffusion dryer

6.2.3.2 Maintenance

In order to ensure a partial pressure reduction for the solvent, the adsorptive material shall not be saturated. If silica gel is used, it shall be regenerated periodically until it loses its function after extensive use and regeneration cycles.

© ISO 2018 – All rights reserved
Documents
Document Sharing Hub
Full document details: BS EN ISO 21083-1:2018

6.2.4 DEMC

6.2.4.1 Principles and specifications

The DMAS consists primarily of a bipolar charger to neutralize the charges on particles, a controller to control flows and high-voltage, a DEMC (see Figure 5) which separates particles based on their electrical mobilities, a particle detector, interconnecting plumbing, a computer and suitable software. The DEMC shall be able to classify particles in the size range of 20 nm to 500 nm and fulfil the qualification procedure described in 7.2. In case of the unipolar charger based instrument, the manufacturer shall be contacted for suitable size range, in order to avoid errors due to multiple charge effect. The losses of the smallest particles due to diffusion within the challenge range shall be considered as well.

NOTE For more information, see ISO 15900.

DEMC principles are as follows.

Particles are introduced at the circumference of a hollow tube. A radial electric field is maintained across the outer walls of this tube and a central electrode. As the charged particles flow through the tube, they are attracted towards the central electrode due to the electric field. These are removed through openings in the central electrode.

Small particles require weak electric fields to move them towards the central electrode. Larger particles require stronger fields. By adjusting the electric field, particles of a known size are attracted towards the opening in the central rod and are removed for measurements. Thus particles with a narrow range of sizes can be extracted for each voltage setting. The narrowness is mainly determined by the geometry and uniformity of air flow in the device. By stepping through a range of voltages, or electric field strength, the number of particles in different sizes in the sample can be measured and the particle size distribution of the sample determined.

Alternately, since the DEMC separates particles according to their electrical mobilities, if one knows the number of charges on a particle, it can be used to separate monodisperse particles from a polydisperse aerosol. In this measurement method test particles are first generated and then sent through a neutralizer. Afterwards, the test particles have the Boltzmann equilibrium charge distribution. In this case the singly charged particles represent the largest fraction of the charged particles (see the details in 7.3.2). In addition the size distribution can be controlled so that the target monodisperse particle size is on the right side of the mode of particle size distribution (see the details in 8.2.13). Under these carefully controlled conditions it is possible to use a DEMC to classify monodisperse particles in the range of 20 nm to 500 nm. (See ISO 15900 for more details.)

A DEMC suitable for the prescribed methods in this document shall be able to separate and provide monodisperse particles in the size range from 20 nm to 500 nm with a geometric standard deviation less than 1,10. In general, the ratio of the sheath flow rate to the aerosol flow rate into the DEMC determines the sizing resolution of the DEMC. A higher ratio provides more accurate sizing and avoids excessive diffusional broadening of the particle size distribution so that better monodispersity of the aerosol exiting the DEMC is achieved (see Reference [11]). In practice, a sheath flow to aerosol flow ratio of at least 5 is shown to give acceptable sizing resolution in the size range of interest for the filtration measurement purpose (see Reference [18]). Prescribing specifications for suitable devices are beyond the scope of this document.

NOTE For more information on DEMC principles see ISO 15900.

© ISO 2018 – All rights reserved

Documents
Document Sharing Hub
Full document details: BS EN ISO 21083-1:2018

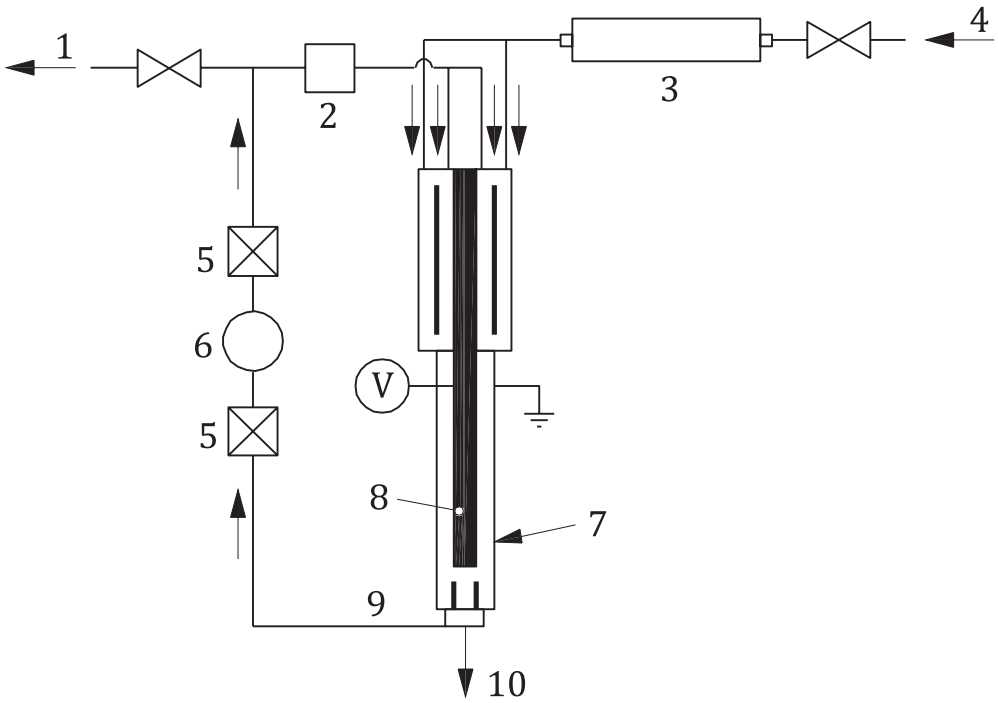

Key

1 sheath air
2 mass flow meter
3 neutralizer
4 polydisperse aerosol
5 HEPA filter
6 pump
7 outer cylinder
8 high voltage rod
9 excess flow
10 monodisperse flow
V high voltage power supply

Figure 5 — DEMC schematic diagram

6.2.4.2 Maintenance

The DEMC shall be cleaned periodically in order to ensure that it works within the manufacturer's specifications. If aerosol deposits accumulate in the electrodes or other components of the DEMC, they may cause an electrical breakdown of the high voltage or alter the performance of the unit. The maintenance interval shall be determined according to the manufacturer's recommendations for use of the device. When the instrument is used as an aerosol provision unit, the input aerosol concentration is usually high, thus, the DEMC requires more frequent cleaning. In the absence of the manufacturer's recommendations, the default maintenance interval is given in Table 1.

Table 1 — Maintenance task

	Operation time h
Clean the impactor	5 to 50
Clean the collector rod and outer tube of the DEMC	2 000
Clean the Dacron screen of the DEMC	2 000
Clean the bipolar charger	2 000
Replace the filter cartridges	2 000

© ISO 2018 – All rights reserved
Documents
Document Sharing Hub
Full document details: BS EN ISO 21083-1:2018

6.2.5 Equilibrium charge distribution and neutralization of aerosol particles

In the atmosphere, particles of all sizes are present. From prolonged exposure to the naturally occurring bipolar ions, the charge on the population of these particles reaches a steady state or equilibrium. Collectively the particles are nearly neutral, i.e. there are nearly as many negatively charged particles as there are positive ones. In this steady state, the charge distributions for a few selected particle sizes are shown in Table 2. This steady state charge distribution is also known as Boltzmann charge distribution.

6.2.6 Neutralization of aerosol particles

The process of bringing an aerosol to the equilibrium charge distribution, or Boltzmann distribution, is also often referred to as neutralizing the aerosol. Thus, "neutralized" aerosol in the present document refers to particles with equilibrium charge distribution, and not completely uncharged particles. Individual particles may carry one or more charges, but the aerosol itself is neutral. Charge neutralization may be achieved by exposing the aerosol to high concentrations of bipolar charge ions for sufficient time until the aerosol reaches the equilibrium charge distribution. There are several bipolar ion sources including nuclear radioactive sources that produce α particles or β rays, corona discharge sources with AC voltage and X-rays, among others. Alternately, when ions of one polarity are used instead of bipolar ions, the process is unipolar charging. Unipolar charging is particularly useful for imparting a large number of charges of the desired polarity to particles.

The neutralization process in the bi-polar charger depends on the product of the ion concentration and the particle residence time. If the ion concentration is low (e.g. due to old radioactive source) or the residence time is short (e.g. due to high flow rate), the particles may not fully achieve the Boltzmann equilibrium charge distribution. Therefore, test of the neutralization efficiency is important.

Different particle generation methods produce different charge distributions. Without neutralization, the difference in charge distribution can impact the filtration test results. Therefore, a neutralizer shall be used for the challenging particles before entering the filter medium holder.

Table 2 — Equilibrium distribution (see Reference [22])

Particle diameter nm	Mobility (m^2/vs) x10^{-4}	Fraction of total particle concentration that carries this number (-6 to +6) of charges												
		−6	−5	−4	−3	−2	−1	0	1	2	3	4	5	6
2,21	4,22E-01	0	0	0	0	0	0,009 1	0,982 68	0,008 2	0	0	0	0	0
2,55	3,16E-01	0	0	0	0	0	0,010 5	0,980 07	0,009 4	0	0	0	0	0
2,94	2,38E-01	0	0	0	0	0	0,012 3	0,976 91	0,010 8	0	0	0	0	0
3,4	1,78E-01	0	0	0	0	0	0,014 4	0,973 1	0,012 5	0	0	0	0	0
3,92	1,34E-01	0	0	0	0	0	0,016 9	0,968 5	0,0146	0	0	0	0	0
4,53	1,01E-01	0	0	0	0	0	0,02	0,962 97	0,017	0	0	0	0	0
5,23	7,55E-02	0	0	0	0	0	0,023 7	0,956 34	0,019 9	0	0	0	0	0
6,04	5,68E-02	0	0	0	0	0	0,028 2	0,948 42	0,023 4	0	0	0	0	0
6,98	4,27E-02	0	0	0	0	0	0,033 5	0,939	0,027 5	0	0	0	0	0
8,06	3,21E-02	0	0	0	0	0	0,039 8	0,927 87	0,032 3	0	0	0	0	0
9,31	2,41E-02	0	0	0	0	0	0,047 2	0,914 8	0,038	0	0	0	0	0
10,75	1,82E-02	0	0	0	0	0	0,055 9	0,899 58	0,044 5	0	0	0	0	0
12,41	1,37E-02	0	0	0	0	0	0,065 9	0,882 02	0,052	0	0	0	0	0
14,33	1,03E-02	0	0	0	0	0	0,077 4	0,861 98	0,060 6	0	0	0	0	0

© ISO 2018 – All rights reserved

AVA Documents Document Sharing Hub
Full document details: BS EN ISO 21083-1:2018