BS EN ISO 22476-4:2021

BSI Standards Publication

Geotechnical investigation and testing – Field testing

Part 4: Prebored pressuremeter test by Ménard procedure

Documents
Document Sharing Hub

Full document details: BS EN ISO 22476-4:2021

National foreword

This British Standard is the UK implementation of EN ISO 22476-4:2021. It is identical to ISO 22476-4:2021. It supersedes BS EN ISO 22476-4:2012, which is withdrawn.

The UK participation in its preparation was entrusted to Technical Committee B/526/3, Ground investigation and ground testing.

A list of organizations represented on this committee can be obtained on request to its committee manager.

Contractual and legal considerations

This publication has been prepared in good faith, however no representation, warranty, assurance or undertaking (express or implied) is or will be made, and no responsibility or liability is or will be accepted by BSI in relation to the adequacy, accuracy, completeness or reasonableness of this publication. All and any such responsibility and liability is expressly disclaimed to the full extent permitted by the law.

This publication is provided as is, and is to be used at the recipient's own risk.

The recipient is advised to consider seeking professional guidance with respect to its use of this publication.

This publication is not intended to constitute a contract. Users are responsible for its correct application.

© The British Standards Institution 2021
Published by BSI Standards Limited 2021

ISBN 978 0 539 00938 5

ICS 93.020

Compliance with a British Standard cannot confer immunity from legal obligations.

This British Standard was published under the authority of the Standards Policy and Strategy Committee on 30 September 2021.

Amendments/corrigenda issued since publication

Date	Text affected

Documents
Document Sharing Hub

Full document details: BS EN ISO 22476-4:2021

EUROPEAN STANDARD

NORME EUROPÉENNE

EUROPÄISCHE NORM

EN ISO 22476-4

September 2021

ICS 93.020

Supersedes EN ISO 22476-4:2012

English Version

Geotechnical investigation and testing - Field testing - Part 4: Prebored pressuremeter test by Ménard procedure (ISO 22476-4:2021)

Reconnaissance et essais géotechniques - Essais en place - Partie 4: Essai pressiomètrique dans un forage préalable selon la procédure Ménard (ISO 22476-4:2021)

Geotechnische Erkundung und Untersuchung - Felduntersuchungen - Teil 4: Vorgebohrter Pressiometerversuch nach Ménard (ISO 22476-4:2021)

This European Standard was approved by CEN on 15 August 2021.

CEN members are bound to comply with the CEN/CENELEC Internal Regulations which stipulate the conditions for giving this European Standard the status of a national standard without any alteration. Up-to-date lists and bibliographical references concerning such national standards may be obtained on application to the CEN-CENELEC Management Centre or to any CEN member.

This European Standard exists in three official versions (English, French, German). A version in any other language made by translation under the responsibility of a CEN member into its own language and notified to the CEN-CENELEC Management Centre has the same status as the official versions.

CEN members are the national standards bodies of Austria, Belgium, Bulgaria, Croatia, Cyprus, Czech Republic, Denmark, Estonia, Finland, France, Germany, Greece, Hungary, Iceland, Ireland, Italy, Latvia, Lithuania, Luxembourg, Malta, Netherlands, Norway, Poland, Portugal, Republic of North Macedonia, Romania, Serbia, Slovakia, Slovenia, Spain, Sweden, Switzerland, Turkey and United Kingdom.

EUROPEAN COMMITTEE FOR STANDARDIZATION
COMITÉ EUROPÉEN DE NORMALISATION
EUROPÄISCHES KOMITEE FÜR NORMUNG

CEN-CENELEC Management Centre: Rue de la Science 23, B-1040 Brussels

© 2021 CEN All rights of exploitation in any form and by any means reserved worldwide for CEN national Members.

Ref. No. EN ISO 22476-4:2021 E

Documents
Document Sharing Hub

Full document details: BS EN ISO 22476-4:2021

European foreword

This document (EN ISO 22476-4:2021) has been prepared by Technical Committee ISO/TC 182 "Geotechnics" in collaboration with Technical Committee CEN/TC 341 “Geotechnical Investigation and Testing” the secretariat of which is held by BSI.

This European Standard shall be given the status of a national standard, either by publication of an identical text or by endorsement, at the latest by March 2022, and conflicting national standards shall be withdrawn at the latest by March 2022.

Attention is drawn to the possibility that some of the elements of this document may be the subject of patent rights. CEN shall not be held responsible for identifying any or all such patent rights.

This document supersedes EN ISO 22476-4:2012.

Any feedback and questions on this document should be directed to the users’ national standards body/national committee. A complete listing of these bodies can be found on the CEN websites.

According to the CEN-CENELEC Internal Regulations, the national standards organizations of the following countries are bound to implement this European Standard: Austria, Belgium, Bulgaria, Croatia, Cyprus, Czech Republic, Denmark, Estonia, Finland, France, Germany, Greece, Hungary, Iceland, Ireland, Italy, Latvia, Lithuania, Luxembourg, Malta, Netherlands, Norway, Poland, Portugal, Republic of North Macedonia, Romania, Serbia, Slovakia, Slovenia, Spain, Sweden, Switzerland, Turkey and the United Kingdom.

Endorsement notice

The text of ISO 22476-4:2021 has been approved by CEN as EN ISO 22476-4:2021 without any modification.

Documents
Document Sharing Hub

Full document details: BS EN ISO 22476-4:2021

Contents

Page

Foreword ... **v**

Introduction ... **vi**

1 Scope ... **1**

2 Normative references ... **1**

3 Terms, definitions and symbols ... **1**
3.1 Terms and definitions ... 1
3.2 Symbols ... 3

4 Equipment ... **6**
4.1 General description ... 6
4.2 Pressuremeter probe ... 6
4.2.1 General ... 6
4.2.2 Probe with flexible cover ... 8
4.2.3 Probe with flexible cover and an additional more rigid protection ... 8
4.2.4 Probe with flexible cover and slotted tube ... 9
4.3 Connecting lines and injected fluid ... 10
4.4 Pressure and volume control unit ... 11
4.4.1 General ... 11
4.4.2 Measurement and control ... 11
4.4.3 Data logger ... 12

5 Test procedure ... **12**
5.1 Assembling the parts ... 12
5.2 Calibration and corrections ... 13
5.3 Pressuremeter test pocket and probe placing ... 13
5.4 Preparation for testing ... 13
5.5 Establishing the loading programme ... 14
5.6 Establishing the pressure of the guard cells for tri-cell probes ... 15
5.7 Expansion ... 15
5.7.1 General ... 15
5.7.2 Readings and recordings ... 15
5.7.3 End of test ... 16
5.8 Back-filling of the pockets ... 16
5.9 Safety requirements ... 16

6 Test results ... **16**
6.1 Data sheet and field print-out or display ... 16
6.1.1 Data sheet for type A control unit ... 16
6.1.2 Site print-out for type B and C control units ... 17
6.1.3 Raw pressuremeter curve ... 17
6.2 Corrected pressuremeter curve ... 17
6.3 Calculated results ... 18

7 Reporting ... **19**
7.1 General ... 19
7.2 Field report ... 19
7.3 Test report ... 19
7.3.1 General ... 19
7.3.2 Ménard pressuremeter test report ... 19
7.3.3 Pressuremeter tests log ... 20

Annex A (normative) **Geometrical features of pressuremeter probes** ... **22**

Annex B (normative) **Calibration and corrections** ... **24**

Annex C (normative) **Placing the pressuremeter probe in the ground** ... **33**

Annex D (normative) **Obtaining pressuremeter parameters** ... **44**

AVA Documents
Document Sharing Hub

© ISO 2021 – All rights reserved

Full document details: BS EN ISO 22476-4:2021

Annex E (normative) **Uncertainties** **51**
Annex F (informative) **Pressuremeter test records** **53**
Bibliography **60**

© ISO 2021 – All rights reserved
Documents
Document Sharing Hub
Full document details: BS EN ISO 22476-4:2021

Foreword

ISO (the International Organization for Standardization) is a worldwide federation of national standards bodies (ISO member bodies). The work of preparing International Standards is normally carried out through ISO technical committees. Each member body interested in a subject for which a technical committee has been established has the right to be represented on that committee. International organizations, governmental and non-governmental, in liaison with ISO, also take part in the work. ISO collaborates closely with the International Electrotechnical Commission (IEC) on all matters of electrotechnical standardization.

The procedures used to develop this document and those intended for its further maintenance are described in the ISO/IEC Directives, Part 1. In particular, the different approval criteria needed for the different types of ISO documents should be noted. This document was drafted in accordance with the editorial rules of the ISO/IEC Directives, Part 2 (see www.iso.org/directives).

Attention is drawn to the possibility that some of the elements of this document may be the subject of patent rights. ISO shall not be held responsible for identifying any or all such patent rights. Details of any patent rights identified during the development of the document will be in the Introduction and/or on the ISO list of patent declarations received (see www.iso.org/patents).

Any trade name used in this document is information given for the convenience of users and does not constitute an endorsement.

For an explanation of the voluntary nature of standards, the meaning of ISO specific terms and expressions related to conformity assessment, as well as information about ISO's adherence to the World Trade Organization (WTO) principles in the Technical Barriers to Trade (TBT), see www.iso.org/iso/foreword.html.

This document was prepared by Technical Committee ISO/TC 182, *Geotechnics,* in collaboration with the European Committee for Standardization (CEN) Technical Committee CEN/TC 341, *Geotechnical Investigation and Testing,* in accordance with the Agreement on technical cooperation between ISO and CEN (Vienna Agreement).

This second edition cancels and replaces the first edition (ISO 22476-4:2012), which has been technically revised.

The main changes compared to the previous edition are as follows:

— types of probes;

— correction procedures;

— probe placing techniques in Annex C;

— clarification of D;

— harmonization of terms and symbols.

A list of all parts in the ISO 22476 series can be found on the ISO website.

Any feedback or questions on this document should be directed to the user's national standards body. A complete listing of these bodies can be found at www.iso.org/members.html.

© ISO 2021 – All rights reserved

Documents
Document Sharing Hub
Full document details: BS EN ISO 22476-4:2021

Introduction

The Ménard pressuremeter test is performed by the radial expansion of a cylindrical probe of a minimum slenderness of 6, placed in the ground (see Figure 1). During the injection of the fluid volume in the probe, the inflation of the measuring cell first brings the outer cover of the probe into contact with the pocket wall and then producing ground displacement. Pressure applied to and the associated radial expansion of the probe are measured either by volume or radial transducers and recorded so as to obtain the stress-strain relationship of ground as tested.

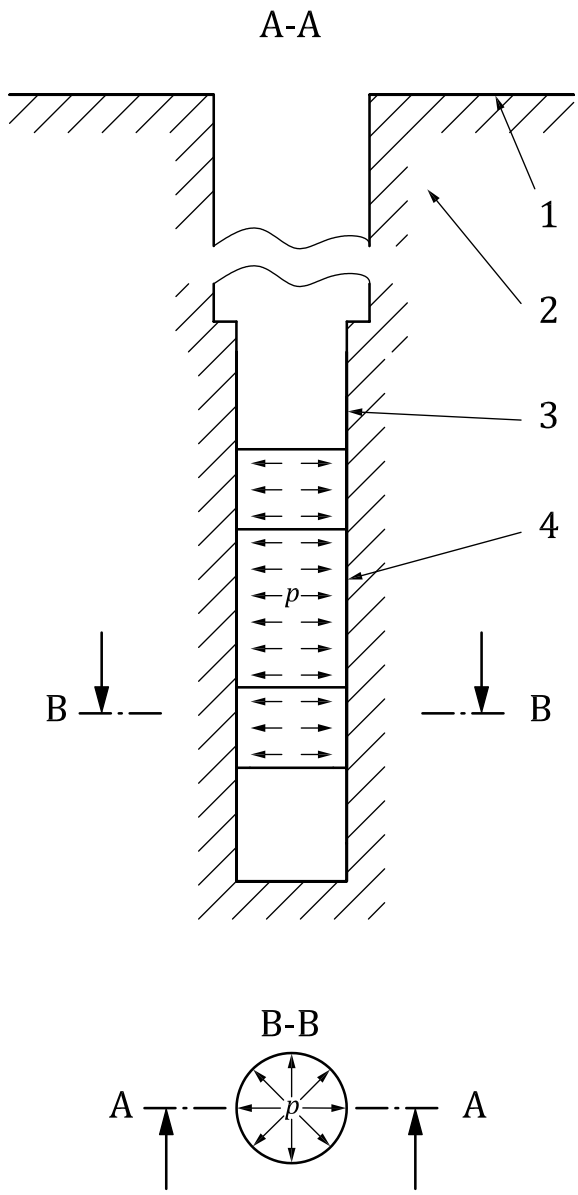

Key

1 ground surface
2 ground
3 pressuremeter test pocket
4 expanding pressuremeter probe

p applied pressure
A-A axial section
B-B cross section

Figure 1 — Principle of a Ménard pressuremeter test

Together with results of investigations with ISO 22475-1 being available or at least with identification and description of the ground according to ISO 14688-1 and ISO 14689 obtained during the pressuremeter

© ISO 2021 – All rights reserved
AVA Documents Document Sharing Hub
Full document details: BS EN ISO 22476-4:2021

test operations, the tests are performed in order to obtain the quantitative determination of a ground profile, including

— the Ménard pressuremeter modulus E_M,

— the Ménard pressuremeter limit pressure p_{lM}, and

— the Ménard creep pressure p_f.

NOTE 1 This document fulfils the requirement for the Ménard pressuremeter test, as part of geotechnical investigation and testing according to EN 1997-1 and EN 1997-2.

NOTE 2 This document refers to a probe historically described as the "60 mm (also called BX) G type probe", that corresponds to a 58 mm diameter probe with a drilling diameter between 60 mm and 66 mm with a pressure limitation of 5 MPa. If specified by the relevant authority or agreed for a specific project by the relevant parties, a different pressure, not higher than 8 MPa, can be set.

NOTE 3 G type probe refers to probes with an external cover creating guard cells (see 4.2).

NOTE 4 Ménard pressuremeter tests can be carried out with other diameter probes such as 32 mm, 44 mm and 76 mm probes.

NOTE 5 Examples of other probe and pocket drilling dimensions are indicated in Table 1.

Table 1 — Probe and pocket drilling dimensions

Probe Designation	Probe Diameter mm	Drilling diameter (mm)	
		Min	Max
AX	44	46	52
NX	70/74	74	80

NOTE 6 Tests with maximum pressures higher than 8 MPa are dealt by ISO 22476-5.

NOTE 7 For the scope of this document (and the associated measuring device and maximum uncertainties given in Table E.1), E_M values up to 500 MPa (that can be determined by calculation) can be commonly obtained. Enhancement of equipment to reduce uncertainties can be implemented to increase the range of measurements. For example, use of GA type equipment and of a shunt for volume measurement can allow measuring E_M values up to 10 000 MPa. Uncertainty calculation can be used to confirm the relevance of these pressuremeter moduli.

© ISO 2021 – All rights reserved

Documents
Document Sharing Hub
Full document details: BS EN ISO 22476-4:2021

Documents
Document Sharing Hub

Geotechnical investigation and testing — Field testing —

Part 4:
Prebored pressuremeter test by Ménard procedure

1 Scope

This document specifies equipment requirements, the execution of and reporting on the Ménard pressuremeter test.

This document describes the procedure for conducting a Ménard pressuremeter test in natural grounds, treated or untreated fills, either on land or off-shore.

The pressuremeter tests results of this document are suited to a quantitative determination of ground strength and deformation parameters. They can yield lithological information in conjunction with measuring while drilling performed when creating the borehole (according to ISO 22476-15). They can also be combined with direct investigation (e.g. sampling according to ISO 22475-1) or compared with other in situ tests (see EN 1997-2).

2 Normative references

The following documents are referred to in the text in such a way that some or all of their content constitutes requirements of this document. For dated references, only the edition cited applies. For undated references, the latest edition of the referenced document (including any amendments) applies.

ISO 14688-1, *Geotechnical investigation and testing — Identification and classification of soil — Part 1: Identification and description*

ISO 14689, *Geotechnical investigation and testing — Identification, description and classification of rock*

ISO 22475-1, *Geotechnical investigation and testing – Sampling by drilling and excavation and ground water measurements – Part 1: Technical principles for execution*

ISO 22476-15, *Geotechnical investigation and testing — Field testing — Part 15: Measuring while drilling*

3 Terms, definitions and symbols

3.1 Terms and definitions

For the purposes of this document, the following terms and definitions apply:

ISO and IEC maintain terminological databases for use in standardization at the following addresses:

— ISO Online browsing platform: available at https://www.iso.org/obp

— IEC Electropedia: available at https://www.electropedia.org/

3.1.1
pressuremeter probe
cylindrical flexible probe which can be expanded by the application of hydraulic pressure and/or pressurised gas

© ISO 2021 – All rights reserved

Documents
Document Sharing Hub
Full document details: BS EN ISO 22476-4:2021

3.1.2
pressuremeter control unit
set of suitable devices capable of supplying fluid and/or gas pressure to the probe, to adjust pressure steps and take readings of the probe's pressure and the volume or radius of the measuring cell

3.1.3
connecting line
cable that connects the control unit to the probe, delivers fluid and/or gas pressure in the measuring and guard cells

3.1.4
pressuremeter test pocket
circular cylindrical cavity formed in the ground to receive a *pressuremeter probe* (3.1.1)

Note 1 to entry: See Annex C.

3.1.5
pressuremeter borehole
borehole in which *pressuremeter test pockets* (3.1.4) with circular cross sections are made in the ground, and into which the *pressuremeter probe* (3.1.1) is to be placed

Note 1 to entry: See Figure 1.

3.1.6
Ménard pressuremeter test
process during which *a pressuremeter probe* (3.1.1) is inflated in the *pressuremeter test pocket* (3.1.4) and the resulting pocket expansion is measured as a function of time and pressure increments according to a defined programme

Note 1 to entry: See Figure 4.

3.1.7
pressuremeter sounding
sequence of *Ménard pressuremeter tests* (3.1.6) executed from the same station in the *pressuremeter borehole* (3.1.5)

3.1.8
pressure reading
pressure as read at the control unit (CU) elevation in the fluid and/or gas circuit supplying the measuring cell

3.1.9
pressure loss
difference between the pressure inside the probe and the pressure applied to the *pressuremeter test pocket* (3.1.4) wall

3.1.10
volume loss
volume readings on the control unit while probe is kept at constant external diameter

Note 1 to entry: They are due to system compressibility (including membrane, probe, tubing, fluid and control unit).

3.1.11
raw pressuremeter curve
graphical plot of the injected volumes recorded at time 60 s, noted V_{60}, versus the applied pressure at each pressure step, p_r

© ISO 2021 – All rights reserved
Documents
Document Sharing Hub
Full document details: BS EN ISO 22476-4:2021

3.1.12
corrected pressuremeter curve
graphical plot of the corrected volumes V_i or radial displacements versus the corrected pressure p

Note 1 to entry: See Figure 5.

3.1.13
pressuremeter creep
difference in volumes recorded at 60 s and at 30 s at each pressure step: $V_{60} - V_{30} = V_{60/30}$

3.1.14
corrected pressuremeter creep curve
graphical plot of the corrected pressuremeter creep, versus the corrected applied pressure at each pressure step

Note 1 to entry: See Figure 5.

3.1.15
pressuremeter log
graphical report of the results of the *pressuremeter sounding* (3.1.7), together with all the information gathered during the drilling

Note 1 to entry: See F.3.

3.1.16
Ménard pressuremeter modulus
modulus obtained from the section between (p_1, V_1) and (p_2, V_2) of the pressuremeter curve

Note 1 to entry: See Figure D.6.

3.1.17
Ménard pressuremeter limit pressure
pressure at which the volume of the *pressuremeter test pocket* (3.1.4) at the depth of the measuring cell has doubled its original volume

Note 1 to entry: See Figure D.5.

3.1.18
pressuremeter creep pressure
pressure defined as the intersection of two straight lines fitted on the creep curve

Note 1 to entry: See Figure D.4.

3.1.19
operator
person who carries out the test

3.1.20
casing
lengths of tubing inserted into a borehole to prevent the hole caving in or to prevent the loss of flushing medium to the surrounding formation, above pocket location

3.2 Symbols

For the purposes of this document, the symbols in Table 2 apply:

Table 2 — Symbols

Symbol	Description	Unit
A, *B*	Parameters for reciprocal curve fitting method	cm^3, cm^3/MPa

© ISO 2021 – All rights reserved

Documents
Document Sharing Hub
Full document details: BS EN ISO 22476-4:2021

Table 2 *(continued)*

Symbol	Description	Unit
A_1 *to* A_6	Parameters for hyperbolic curve fitting methods	variable
a	Apparatus volume loss coefficient	cm^3/MPa
b, c	Parameters of power law type interpolation for the probe pressure loss correction	variable
d, e	Parameters of linear type interpolation for the probe volume loss correction	variable
d_c	Outside diameter of the central measuring cell, including any additional protection such as a slotted tube	mm
d_{ci}	Outside diameter of the inner part of the probe with slotted tube	mm
d_g	Outside diameter of the guard cells	mm
d_i	Inside diameter of the calibration cylinder used for the volume loss calibration	mm
d_r	Outside diameter of the central measuring cell during expansion as read on the CU, before data correction	cm^3
d_t	Drilling tool diameter	mm
E_M	Ménard pressuremeter modulus	MPa
K	Factor to determine the differential pressure for tri-cell probes	-
l_c	Length of the central measuring cell of the probe, when the cell membrane is fixed on the probe steel core	mm
l_g	Length of each guard cell	mm
l_m	Length along the tube axis of the slotted section of the slotted tube	mm
l_p	Length of the calibration cylinder used for the volume loss calibration	mm
l_t	Length of the cover	mm
m	Parameter of power law type interpolation for the probe pressure loss correction	-
m_E	Minimum value, strictly positive, of the m_i slopes	cm^3/MPa
m_i	Slope of the corrected pressuremeter curve between the two points with coordinates (p_{i-1}, V_{i-1}) and (p_i, V_i)	cm^3/MPa
p	Pressure applied to the ground after correction	MPa
p_c	Fluid or gas pressure in the measuring cell of the pressuremeter probe.	MPa
p_e	Correction for probe pressure loss	MPa
p_E	Pressure at the origin of the segment exhibiting the slope m_E	MPa
p'_E	Pressure at the end of the segment exhibiting the slope m_E	MPa
p_{el}	Ultimate pressure loss of the probe	MPa
p_f	Pressuremeter creep pressure	MPa
p_g	Pressure in the guard cells, read at the CU transducer elevation	-
p_h	Hydrostatic pressure between the control unit indicator and the central measuring cell of the pressuremeter probe	MPa
p_i	Pressuremeter corrected pressure	MPa
p_{lM}	Ménard pressuremeter limit pressure of the ground	MPa
p_{lMDH}	Ménard pressuremeter limit pressure as extrapolated by the double hyperbolic method	MPa
p_{lMH}	Ménard pressuremeter limit pressure as extrapolated by the hyperbolic method	MPa
p_{lMR}	Ménard pressuremeter limit pressure as extrapolated by the reciprocal curve method	MPa
p_m	Pressure loss of the central measuring cell membrane for a specific expansion	MPa
p_r	Pressure in the measuring cell fluid or gas circuit, read at the CU transducer elevation	MPa
p_t	Target pressure for each pressure step according to loading program	MPa

© ISO 2021 – All rights reserved
Documents
Document Sharing Hub
Full document details: BS EN ISO 22476-4:2021

Table 2 *(continued)*

Symbol	Description	Unit
p_0	Pressuremeter horizontal at rest pressure	MPa
p_1	Corrected pressure at the origin of the pressuremeter modulus pressure range	MPa
p_2	Corrected pressure at the end of the pressuremeter modulus pressure range	MPa
t	Time	s
t_h	Time the loading pressure level is held	s
u_s	Pore water pressure in the ground at the depth of the test	MPa
V	Value, after zeroing and data correction, of the volume injected in the central measuring cell and measured 60 s after starting a pressure step	cm^3
V_c	Original volume of the central measuring cell, including the slotted tube, if applicable	cm^3
V_E	Value, after data correction, of the volume injected in the central measuring cell for pressure p_E	cm^3
V'_E	Value, after data correction, of the volume injected in the central measuring cell for pressure p'_E	cm^3
V_e	Correction for volume loss of the whole equipment	
V_i	Corrected volume	cm^3
V_L	Value, after data correction, of the volume injected in the central measuring cell when the original volume of the pressuremeter cavity has doubled	cm^3
V_m	The average corrected volume between V_1 and V_2	cm^3
V_p	Volume corresponding is the intercept on the volume axis of the straight line best fitting the data points on the p-V curve obtained in the volume loss calibration test (see Figure B.2)	cm^3
V_r	Volume injected in the probe as read on the CU, before data correction	cm^3
V_t	Volume of the central measuring cell including the slotted tube	cm^3
V_1	Corrected volume at the origin of the pressuremeter modulus pressure range	cm^3
V_2	Corrected volume at the end of the pressuremeter modulus pressure range	cm^3
V_{30}	Volume injected in the central measuring cell as read 30 s after the beginning of the pressure step	cm^3
V_{60}	Volume injected in the central measuring cell as read 60 s after the beginning of the pressure step	cm^3
$V_{60/30}$	Injected volume change from 30 s to 60 s after reaching the pressure step, also called pressuremeter creep	cm^3
$V_{60/60}$	60 s injected volume change between two successive pressure steps	cm^3
z	Elevation, positively counted above datum	m
z_{CU}	Elevation of the pressure measuring device for the fluid and/or gas injected in the probe	m
z_N	Elevation of the ground surface at the location of the pressuremeter sounding	m
z_p	Elevation of the measuring cell centre during testing	m
z_w	Elevation of the ground water table (or free water surface in a marine or river environment)	m
β	Coefficient used to determine the pressuremeter modulus pressure range	---
γ	Unit weight of ground at the time of testing	kN/m^3
γ_i	Unit weight of the liquid injected in the central measuring cell	kN/m^3
γ_w	Unit weight of water	kN/m^3
Δp	Loading pressure increment	MPa
Δp_1	Initial pressure increment	MPa
r_i	Radius of the measuring cell for transducer i	m

© ISO 2021 – All rights reserved

AVA Documents Document Sharing Hub
Full document details: BS EN ISO 22476-4:2021

Table 2 *(continued)*

Symbol	Description	Unit
Δt_i	Duration to achieve pressure step *i*	s
δV	Tolerance for volume measurement	cm^3
λ_g	Rate of change of pressure head of gas at p_k per metre depth	m^{-1}
ν	Poisson's ratio	-
σ_{hs}	Total horizontal stress in the ground at test elevation	kPa
σ_{vs}	Total vertical stress in the ground at test depth	kPa

4 Equipment

4.1 General description

The pressuremeter shown schematically in Figure 2 shall include:

— the pressuremeter probe;

— the string of rods to handle the probe;

— the control unit (CU);

— the connecting lines between the control unit and the probe.

Some means of measuring the depth of the test with appropriate measurement error shall be provided (see also Annex E).

4.2 Pressuremeter probe

4.2.1 General

The probe shall be made up of cylindrical cells of circular cross-section along the same axis (see Figure 2). The probe shall consist of a hollow steel core with passages to inject the proper fluids to inflate the cells. The steel core, on its outside curved surface, shall usually bear a network of grooves which uniformly distribute the liquid (if relevant) in the measuring cell under the membrane, applying a uniform pressure on the pressuremeter test pocket wall. The top of the core shall be threaded and coupled to the string of rods handling the probe from ground level.

If the measuring cell has slenderness at least equal to 6, the probe may be mono-cell. Conversely the probe may be tri-cell to respect this criterion. A central measuring cell membrane shall isolate the fluid in the central measuring cell from the gas of the guard cells.

NOTE 1 Compliance with this criterion ensures that the stress field is two-dimensional.

The central measuring cell may be:

— covered by the cover creating guard cell (tri-cell G type probe);

— covered by the cover with specific membranes for guard cells (tri-cell E type probe);

— covered by the cover without guard cells (mono-cell type).

All probes can be equipped for volumetric measurement or by radial transducer or any device providing a reliable measure of either probe volume or radius. Pressure can be measured at control unit level or at probe level.

© ISO 2021 – All rights reserved
Documents
Document Sharing Hub
Full document details: BS EN ISO 22476-4:2021

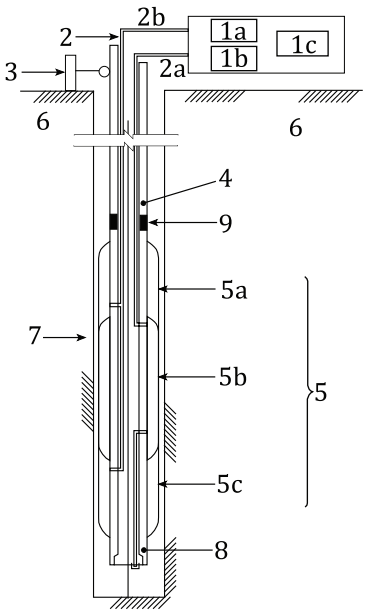

a) Tri-cell probe, G type, with measurement of volume of the measuring cell

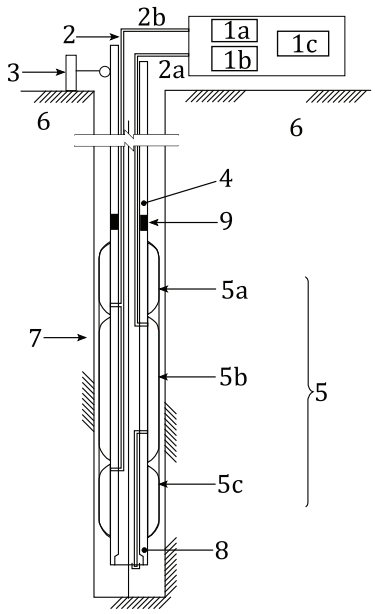

b) Tri-cell probe, E type, with measurement of volume of the measuring cell

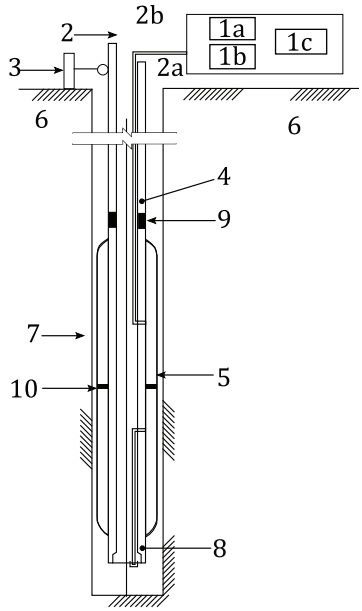

c) Mono-cell probe, with measurement of radial displacement (optional)

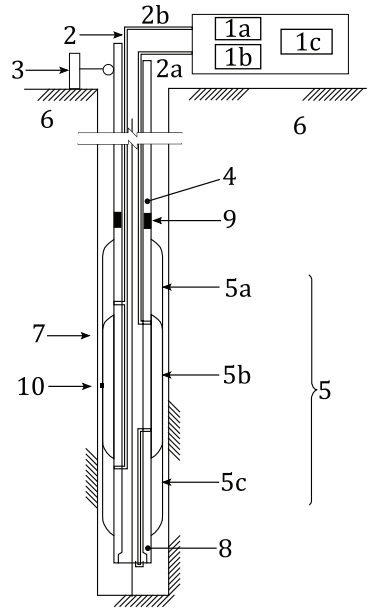

d) Tri-cell probe, with measurement of radial displacement

Key

1a pressurization, differential pressurization and injection devices

1b pressure and volume measuring devices

1c acquisition, storage and printing out of the data (required for CU type B and C)

2 connecting lines: 2a line for liquid injection
2b line for gas injection

3 depth measurement system

4 rods

5 pressuremeter probe

6 ground

7 pressuremeter test pocket

8 hollow probe body

© ISO 2021 – All rights reserved

Documents
Document Sharing Hub
Full document details: BS EN ISO 22476-4:2021

5a upper guard cell
5b central measuring cell
5c lower guard cell
9 probe rod coupling
10 transducers

Figure 2 — Diagram of a Ménard pressuremeter

If expansion is followed by the volume of the measuring cell, the measuring cell shall be inflated by injecting a liquid of low compressibility.

NOTE 2 Alternatively air can be used to inflate the measuring cell and the expansion followed by displacement transducers.

Three types of pressuremeter probes shall be used depending of ground type and conditions according to Annex C:

— hollow probe body with a flexible cover;

— hollow probe body with a flexible cover and an additional more rigid protection;

— hollow probe body with a flexible cover and a slotted steel tube.

These probes are respectively described in Figure 3 a) and Figure 3 b) and their geometrical features are given in Table A.1.

The pressuremeter probe shall be capable of a volumetric expansion such as to enable assessing the Ménard pressuremeter limit pressure within its pressure capabilities.

NOTE 3 For 60 mm probes and probes in 60 mm slotted tubes, 200 + V_c can be used, where 200 and V_c are in cm^3.

NOTE 4 For other dimensions of tri-cell probes and for mono-cell probes, a specific assessment can be made.

4.2.2 Probe with flexible cover

The probe includes:

— one measuring cell, with an outside diameter d_c and a minimum length l_c, which shall expand radially in a pocket and shall apply a uniform pressure to the pocket wall;

— two guard cells if applicable with an outside diameter d_g and a length l_g located above and below the central measuring cell. These cells shall be designed to apply to the pocket wall a pressure close to, but not greater than, the pressure induced by the central measuring cell. These cells should be inflated by gas pressure.

The tri-cell probe should be fitted with a central measuring cell membrane and a flexible cover sleeve. The membrane and the flexible cover shall be fixed to the steel core with sealing system in order to avoid any leakage or pressure loss.

The flexible cover can be reinforced by textile or metallic canvas.

4.2.3 Probe with flexible cover and an additional more rigid protection

A flexible protection made of thin plastic or steel strips, either overlapping (up to half-way) or isolated, running between fixing rings may be added over the cover.

NOTE The flexible protection can be added to reduce damage to the cover from sharp fragments protruding from the pocket wall.

© ISO 2021 – All rights reserved
Documents
Document Sharing Hub
Full document details: BS EN ISO 22476-4:2021

4.2.4 Probe with flexible cover and slotted tube

This probe shall consist of two parts:

— an inner part corresponding to previously described probes, and

— an outer part which shall be made of a slotted steel tube (see Figure 3). When this slotted tube is pushed or driven into the soil it shall be fitted with an extension pipe ending with a point or a cutting shoe.

The outside steel tube shall carry at least 6 axial slots, evenly distributed round the circumference [Figure 3 b)].

The diameter of the slotted tube shall be verified at intervals appropriate to the use the probe has received, so that it remains compliant with tool diameter (see C.2.2).

The slotted tube should be kept clean, so that it is able to recover its original shape and size.

The assembly within the slotted tube shall be located so as to allow the probe to expand radially with a minimum of resistance. The mid plane of the measuring cell shall correspond to the mid plane of the slots.

© ISO 2021 – All rights reserved

Documents
Document Sharing Hub
Full document details: BS EN ISO 22476-4:2021

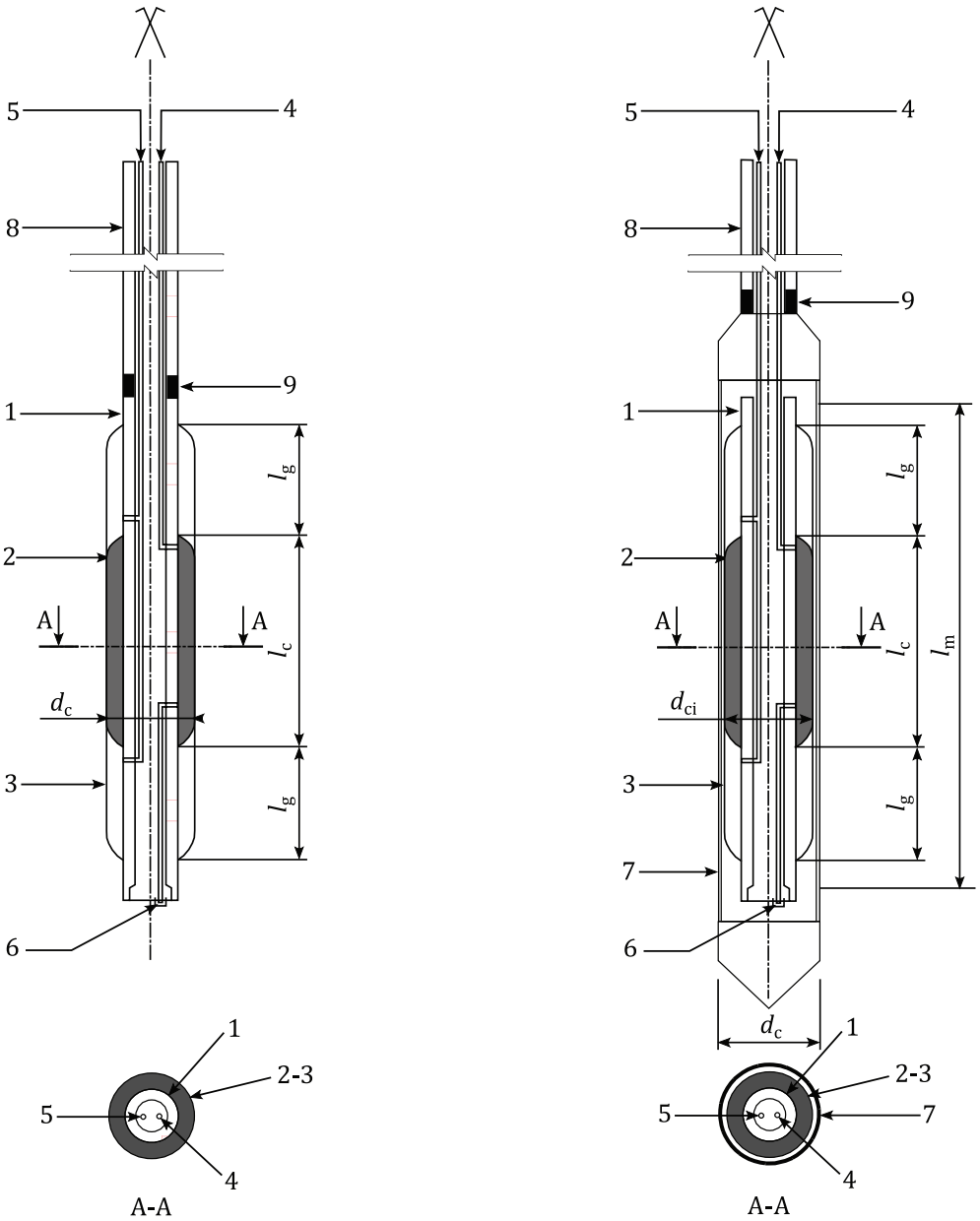

a) pressuremeter probe with flexible cover

b) pressuremeter probe with slotted tube

Key

1 hollow probe body
2 measuring cell membrane
3 external sleeve or flexible cover
4 liquid inlet to the measuring cell
5 gas inlet to the guard cell
6 measuring cell drain outlet
7 slotted tube
8 rods
9 probe-rod coupling

Figure 3 — Description of the pressuremeter probe

4.3 Connecting lines and injected fluid

The flexible lines shall connect the pressure and volume control unit to the probe. They shall convey the liquid to the measuring cell and the gas to the guard cells. They may be parallel or coaxial. When the lines are coaxial the central line shall convey the liquid and the outer line the gas.

© ISO 2021 – All rights reserved
Documents
Document Sharing Hub
Full document details: BS EN ISO 22476-4:2021

The liquid injected into the measuring cell is either water or a liquid of similar viscosity and shall not freeze under the conditions of use.

The injected fluid and inner diameter of the connecting lines shall be selected in order to transmit the fluid from the CU to the probe in a time acceptable for pressure step to apply to the ground. The increment of volume $V_{60/30}$ should be lower than 30 cm^3 at the ultimate pressure loss of the probe p_{el} during central membrane pressure loss test.

NOTE Additives such as ethylene glycol increase notably the viscosity of the fluid and therefore the time to transmit the fluid from the CU to the probe is increased. Alternative fluid like oil can also be chosen.

4.4 Pressure and volume control unit

4.4.1 General

The control unit shall include:

— equipment to pressurize, and so to inflate the probe, and to maintain constant pressures as required during the test;

— equipment to maintain an appropriate pressure difference between the central measuring cell and the guard cells, if relevant;

— device which permits, according to the type defined in Table 1, the reading and recording of the parameters to be measured: time, pressure and volume.

Table 3 — Types of pressuremeter control unit

Type of control unit	Type of test regulation	Type of reading and recording
A	manual	manual
B	manual	automatic
C	automatic	automatic

The control unit shall control the probe cell expansion and permit the simultaneous reading of liquid and/or gas pressures and injected liquid volume or radius of the measuring cell as a function of time.

The pressurizing device shall allow:

— reaching the pressuremeter limit pressure or a pressure p_r at least equal to the maximum pressure defined for the test;

— holding constant each loading pressure level in the measuring cell and in the guard cells during the set time;

— implementing a pressure increment of 0,5 MPa in less than 20 s as measured on the control unit;

— controlling the pressure difference between the measuring cell and the guard cells;

— injecting a volume of liquid in the measuring cell larger than at least its volume at rest V_c, i.e. 700 cm^3 for a 60 mm pressuremeter probe.

If volumetric measurement is used, a valve between the volumeter and the pressure measuring device shall allow stopping the injection.

4.4.2 Measurement and control

4.4.2.1 Time

The accuracy of the device used to measure time shall be in accordance with Annex E.

© ISO 2021 – All rights reserved

Documents
Document Sharing Hub
Full document details: BS EN ISO 22476-4:2021

4.4.2.2 Pressure and volume

The pressure measuring devices for the fluid in the central measuring cell and for the gas in the guard cells shall be located:

— either in the control unit;

— or inside the probe, less than 1 m above the centre of the central measuring cell.

The resolution of measurement of the devices measuring pressure and volume shall be in accordance with Annex E.

4.4.2.3 Display of readings

At the site the pressure and volume control unit shall give a simultaneous and instantaneous display of the following readings: time, pressure of the liquid injected into the measuring cell, volume of the liquid injected or radius of the measuring cell and pressure of the gas in the guard cell circuit when relevant.

4.4.2.4 Volume loss calibration cylinder

The main features of this steel cylinder (Figure B.1) shall be as follows:

— measured inside diameter d_i not more than 10 % of over the probe diameter d_c;

— wall thickness not less than 8 mm;

— length l_p more than 1 m or the slot length l_m, whichever is greater.

4.4.3 Data logger

The data logger, the device to acquire and record the data with type B or C control units, shall be designed to record time, the raw data from the transducers, the zeros, calibration coefficients and identification of each probe and the resulting calibrated data of pressure and volume.

The data logger B or C records p_r and V_r, and in case of radius measurements by transducers, p_r and r_i.

The data logger shall permit the display or the printing of the raw data of pressure and volume (p_r, V_r) at the time interval defined by loading program, and the raw pressuremeter curve.

The data logger shall not interfere with the conduct of a test as specified in 5.7 and it shall not obscure any other measuring devices. It shall be designed so as to automatically:

— record its own identification parameters: control unit number, data logger number;

— require the input of the information necessary to the test, as described in 5.4;

— prevent the input of pressure and volume data or other information not obtained during the testing process.

5 Test procedure

5.1 Assembling the parts

The cover, the membrane and possibly the rigid protection or the slotted tube if required shall be selected according to the expected stress-strain parameters and type of the ground in which the probe is to be used. They shall each fulfil the specifications given in Annex A. Then the probe shall be linked to the control unit through the connecting lines.

The whole system shall be filled with liquid and purged to remove air bubbles.

© ISO 2021 – All rights reserved
Documents
Document Sharing Hub
Full document details: BS EN ISO 22476-4:2021