BS EN ISO 22476-9:2020

BSI Standards Publication

Geotechnical investigation and testing — Field testing

Part 9: Field vane test (FVT and FVT-F)

Documents
Document Sharing Hub

Full document details: BS EN ISO 22476-9:2020

National foreword

This British Standard is the UK implementation of EN ISO 22476-9:2020. It is identical to ISO 22476-9:2020.

The UK participation in its preparation was entrusted to Technical Committee B/526/3, Site investigation and ground testing.

A list of organizations represented on this committee can be obtained on request to its committee manager.

This publication does not purport to include all the necessary provisions of a contract. Users are responsible for its correct application.

© The British Standards Institution 2020
Published by BSI Standards Limited 2020

ISBN 978 0 580 51118 9

ICS 93.020

Compliance with a British Standard cannot confer immunity from legal obligations.

This British Standard was published under the authority of the Standards Policy and Strategy Committee on 30 September 2020.

Amendments/corrigenda issued since publication

Date	Text affected

Documents
Document Sharing Hub

Full document details: BS EN ISO 22476-9:2020

EUROPEAN STANDARD

NORME EUROPÉENNE

EUROPÄISCHE NORM

EN ISO 22476-9

September 2020

ICS 93.020

English Version

Geotechnical investigation and testing - Field testing - Part 9: Field vane test (FVT and FVT-F) (ISO 22476 9:2020)

Reconnaissance et essais géotechniques - Essais en place - Partie 9: Essai au scissomètre de chantier (ISO 22476 9:2020)

Geotechnische Erkundung und Untersuchung - Felduntersuchungen - Teil 9: Flügelscherversuche (FVT und FVT F) (ISO 22476 9:2020)

This European Standard was approved by CEN on 15 September 2020.

CEN members are bound to comply with the CEN/CENELEC Internal Regulations which stipulate the conditions for giving this European Standard the status of a national standard without any alteration. Up-to-date lists and bibliographical references concerning such national standards may be obtained on application to the CEN-CENELEC Management Centre or to any CEN member.

This European Standard exists in three official versions (English, French, German). A version in any other language made by translation under the responsibility of a CEN member into its own language and notified to the CEN-CENELEC Management Centre has the same status as the official versions.

CEN members are the national standards bodies of Austria, Belgium, Bulgaria, Croatia, Cyprus, Czech Republic, Denmark, Estonia, Finland, France, Germany, Greece, Hungary, Iceland, Ireland, Italy, Latvia, Lithuania, Luxembourg, Malta, Netherlands, Norway, Poland, Portugal, Republic of North Macedonia, Romania, Serbia, Slovakia, Slovenia, Spain, Sweden, Switzerland, Turkey and United Kingdom.

EUROPEAN COMMITTEE FOR STANDARDIZATION
COMITÉ EUROPÉEN DE NORMALISATION
EUROPÄISCHES KOMITEE FÜR NORMUNG

CEN-CENELEC Management Centre: Rue de la Science 23, B-1040 Brussels

© 2020 CEN All rights of exploitation in any form and by any means reserved worldwide for CEN national Members.

Ref. No. EN ISO 22476-9:2020 E

Documents
Document Sharing Hub

Full document details: BS EN ISO 22476-9:2020

European foreword

This document (EN ISO 22476-9:2020) has been prepared by Technical Committee ISO/TC 182 "Geotechnics" in collaboration with Technical Committee CEN/TC 341 “Geotechnical Investigation and Testing” the secretariat of which is held by BSI.

This European Standard shall be given the status of a national standard, either by publication of an identical text or by endorsement, at the latest by March 2021, and conflicting national standards shall be withdrawn at the latest by March 2021.

Attention is drawn to the possibility that some of the elements of this document may be the subject of patent rights. CEN shall not be held responsible for identifying any or all such patent rights.

According to the CEN-CENELEC Internal Regulations, the national standards organizations of the following countries are bound to implement this European Standard: Austria, Belgium, Bulgaria, Croatia, Cyprus, Czech Republic, Denmark, Estonia, Finland, France, Germany, Greece, Hungary, Iceland, Ireland, Italy, Latvia, Lithuania, Luxembourg, Malta, Netherlands, Norway, Poland, Portugal, Republic of North Macedonia, Romania, Serbia, Slovakia, Slovenia, Spain, Sweden, Switzerland, Turkey and the United Kingdom.

Endorsement notice

The text of ISO 22476-9:2020 has been approved by CEN as EN ISO 22476-9:2020 without any modification.

Documents
Document Sharing Hub

Full document details: BS EN ISO 22476-9:2020

Contents

Page

Foreword ... **v**

Introduction ... **vi**

1 Scope ... **1**

2 Normative references ... **1**

3 Terms, definitions and symbols ... **1**
3.1 Terms and definitions ... 1
3.2 Symbols ... 4

4 Equipment and configurations ... **6**
4.1 Test equipment ... 6
4.1.1 Vane and vane shaft ... 6
4.1.2 Friction reducer ... 7
4.1.3 Slip coupling ... 7
4.1.4 Extension rods, protective casings, protection shoe ... 7
4.1.5 Rotation unit ... 8
4.1.6 Equipment for measuring rotation and torque ... 8
4.2 Test configurations ... 8

5 Selection of equipment and test configuration ... **10**
5.1 Selection of equipment ... 10
5.2 Selection of test configuration ... 11

6 Test procedure ... **12**
6.1 Equipment checks and calibrations ... 12
6.2 Position and inclination of thrust machine ... 12
6.3 Test depths ... 12
6.4 Internal friction torque reading prior to testing ... 12
6.5 Methods for reaching the level for insertion of the vane ... 12
6.6 Insertion of the vane ... 14
6.7 External friction torque reading ... 15
6.8 Vane shear test ... 15
6.9 Internal friction torque reading after the test ... 16

7 Test results ... **16**

8 Reporting ... **17**
8.1 General ... 17
8.2 Reporting of test results ... 17
8.2.1 General information ... 17
8.2.2 Location of the test ... 18
8.2.3 Test equipment ... 18
8.2.4 Test procedure ... 18
8.2.5 Test results ... 19
8.3 Presentation of test plots ... 19

Annex A (informative) **Test phases** ... **20**

Annex B (informative) **Example of field report for field vane test** ... **21**

Annex C (normative) **Maintenance, checks and calibration** ... **23**

Annex D (informative) **Uncertainties in field vane testing** ... **26**

Annex E (normative) **General interpretation and explanation for tapered and rectangular vanes with H/D ratios differing from 2** ... **28**

Annex F (informative) **Interpretation and explanation for a rectangular vane with rounded corners** ... **31**

Annex G (informative) **Calculation of test depth corrected for inclination** ... **33**

AVA Documents
Document Sharing Hub

© ISO 2020 – All rights reserved

Full document details: BS EN ISO 22476-9:2020

Annex H (informative) **Example of estimation of post-peak behaviour** **34**
Bibliography **35**

© ISO 2020 – All rights reserved
Documents
Document Sharing Hub
Full document details: BS EN ISO 22476-9:2020

Foreword

ISO (the International Organization for Standardization) is a worldwide federation of national standards bodies (ISO member bodies). The work of preparing International Standards is normally carried out through ISO technical committees. Each member body interested in a subject for which a technical committee has been established has the right to be represented on that committee. International organizations, governmental and non-governmental, in liaison with ISO, also take part in the work. ISO collaborates closely with the International Electrotechnical Commission (IEC) on all matters of electrotechnical standardization.

The procedures used to develop this document and those intended for its further maintenance are described in the ISO/IEC Directives, Part 1. In particular, the different approval criteria needed for the different types of ISO documents should be noted. This document was drafted in accordance with the editorial rules of the ISO/IEC Directives, Part 2 (see www.iso.org/directives).

Attention is drawn to the possibility that some of the elements of this document may be the subject of patent rights. ISO shall not be held responsible for identifying any or all such patent rights. Details of any patent rights identified during the development of the document will be in the Introduction and/or on the ISO list of patent declarations received (see www.iso.org/patents).

Any trade name used in this document is information given for the convenience of users and does not constitute an endorsement.

For an explanation of the voluntary nature of standards, the meaning of ISO specific terms and expressions related to conformity assessment, as well as information about ISO's adherence to the World Trade Organization (WTO) principles in the Technical Barriers to Trade (TBT), see www.iso.org/iso/foreword.html.

This document was prepared by Technical Committee ISO/TC 182, *Geotechnics,* in collaboration with the European Committee for Standardization (CEN) Technical Committee CEN/TC 341, *Geotechnical Investigation and Testing,* in accordance with the Agreement on technical cooperation between ISO and CEN (Vienna Agreement).

A list of all parts in the ISO 22476 series can be found on the ISO website.

Any feedback or questions on this document should be directed to the user's national standards body. A complete listing of these bodies can be found at www.iso.org/members.html.

© ISO 2020 – All rights reserved

Documents
Document Sharing Hub
Full document details: BS EN ISO 22476-9:2020

Introduction

The field vane test is used to determine the vane shear strength of soils in the undrained condition, by insertion of a rectangular vane into fine-grained soil and rotating it. During the rotation, the torque and rotation can be measured, depending on the test configuration. From the measured torque and the dimensions of the vane, the peak shear strength, an indication of post-peak behaviour, and the remoulded shear strength can be derived by a limit equilibrium analysis. Soil sensitivity can be ascertained if peak and remoulded shear strengths have been determined.

The tests are carried out in boreholes, in trial pits and with pushed-in equipment. The torque and rotation are measured either above the ground surface using extension rods, or directly above the vane.

The field vane test is mainly applicable to saturated fine-grained soil. The vane shear strength determined by the test is commonly corrected before geotechnical analysis, using factors based on local experience.

© ISO 2020 – All rights reserved
Documents
Document Sharing Hub
Full document details: BS EN ISO 22476-9:2020

Geotechnical investigation and testing — Field testing —

Part 9: Field vane test (FVT and FVT-F)

1 Scope

This document deals with the equipment requirements, execution and reporting of field vane tests for the measurement of peak and remoulded vane shear strength together with the sensitivity of fine-grained soils. In addition, post-peak shear strength behaviour can be evaluated. Two types of field vane test are described: the ordinary field vane test (FVT) and the fast field vane test (FVT-F).

The uncertainties of the vane test result are described in Annex D.

NOTE 1 This document fulfils the requirements for field vane tests as part of the geotechnical investigation and testing according to EN 1997-1 and EN 1997-2.

NOTE 2 This document covers onshore and nearshore field vane testing.

2 Normative references

The following documents are referred to in the text in such a way that some or all of their content constitutes requirements of this document. For dated references, only the edition cited applies. For undated references, the latest edition of the referenced document (including any amendments) applies.

ISO 10012, *Measurement management systems — Requirements for measurement processes and measuring equipment*

3 Terms, definitions and symbols

3.1 Terms and definitions

For the purposes of this document, the following terms and definitions apply.

ISO and IEC maintain terminological databases for use in standardization at the following addresses:

— ISO Online browsing platform: available at https://www.iso.org/obp

— IEC Electropedia: available at http://www.electropedia.org/

3.1.1
cased extension rod
extension rod that is sleeved inside of *protective casings* (3.1.11) during *vane* (3.1.23) testing

3.1.2
cased borehole
borehole that is cased to prevent collapse and minimize friction between the extension rods and soil

3.1.3
centralizer
equipment to keep the extension rods straight and prevent buckling

© ISO 2020 – All rights reserved

Documents
Document Sharing Hub
Full document details: BS EN ISO 22476-9:2020

3.1.4
data acquisition system
measuring system, which converts physical quantities to digital format

Note 1 to entry: The system typically includes sensors, signal conditioning, an analogue-to-digital converter and recording unit.

3.1.5
downhole test
test configuration whereby the torque is measured close to the *vane* (3.1.23)

Note 1 to entry: The *rotation* (3.1.14) can be measured close to the vane or above the ground surface.

3.1.6
external friction torque
torque due to friction outside the measuring equipment during *rotation* (3.1.14) excluding torque caused by shearing of soil

Note 1 to entry: External friction is mainly caused by friction acting on extension rods, and it can be estimated with a *slip coupling* (3.1.16) immediately before engagement of the *vane* (3.1.23).

3.1.7
friction reducer
ring inserted between the *vane* (3.1.23) and the extension rods to reduce friction along *uncased extension rods* (3.1.20)

3.1.8
insertion length
distance from the ground surface or base of (bore)hole or trial pit to mid-height of the *vane* (3.1.23), measured along the axis of the extension rods

3.1.9
internal friction torque
torque due to friction inside the measuring equipment during *rotation* (3.1.14) when there is no torque acting on the *vane* (3.1.23) and no friction acting on the extension rods

3.1.10
protection shoe
equipment to protect the *vane* (3.1.23) while pushing into the soil

Note 1 to entry: It assists with the insertion of the vane without drilling. Usually, the tip of the protection shoe consists of four plate slots allowing the *vane plates* (3.1.24) to retract inside of the *protective casing* (3.1.11).

3.1.11
protective casing
tube that isolates the extension rods from the soil and gives support against buckling

3.1.12
protrusion length
distance between the bottom of the protective casing/shoe and the mid-height of the *vane* (3.1.23) when pushed to the *test depth* (3.1.17), measured along the axis of the rods

3.1.13
push-in equipment
equipment to push the *vane* (3.1.23) into the soil without predrilling.

3.1.14
rotation
change of angle by the circular movement of the *vane* (3.1.23) around its axis

Note 1 to entry: Apparent rotation is the rotation recorded by the rotation measurement equipment.

© ISO 2020 – All rights reserved
Documents
Document Sharing Hub
Full document details: BS EN ISO 22476-9:2020

3.1.15
rotation rate
rate of angular *rotation* (3.1.14) of the *vane* (3.1.23)

3.1.16
slip coupling
mechanism that allows the extension rods to rotate freely while the *vane* (3.1.23) remains stationary

Note 1 to entry: The function of slip coupling is to separate the rod friction from vane torque resistance. A slip coupling mechanism shall provide free rotation with minimal friction.

3.1.17
test depth
vertical distance from the ground surface, reference level or datum to the mid-height of the *vane* (3.1.23)

Note 1 to entry: According to Annex G, the *insertion length* (3.1.8) can be corrected with inclinometer measurements to correspond to the corrected test depth. Otherwise, the test depth is based on the sum of the lengths of the extension rods from reference level or datum owing to the uncertainty of inclination.

3.1.18
test location
plan position of a test or series of tests

3.1.19
time to failure
time from the beginning of application of torque to the *vane* (3.1.23) until the maximum torque is reached

3.1.20
uncased extension rod
extension rod that is not protected by protective casing allowing friction to develop between the extension rods and the soil

3.1.21
uncased vane
vane (3.1.23) pushed into the ground without protection

3.1.22
uphole test
test configuration whereby the torque is measured above the ground surface

Note 1 to entry: The *rotation* (3.1.14) is applied and measurements registered above the ground surface.

3.1.23
vane
device formed by four *vane plates* (3.1.24) fixed at 90° to each other

3.1.24
vane plate
thin and flat rectangular plate

Note 1 to entry: Most *vanes* (3.1.23) have a (nearly) rectangular shape. For practical reasons, vanes without *protection shoes* (3.1.10) often have slightly tapered lower ends of the vane plates or with rounded corners. Some equipment using *uncased extension rods* (3.1.20) and a *slip coupling* (3.1.16) to separate the rod friction from the torque on the vane are designed with slightly tapered, sharpened, pointed or conical, vane plates in order to disengage the slip coupling during the pushing stroke.

3.1.25
vane shaft
cylindrical element of the *vane* (3.1.23) to which the *vane plates* (3.1.24) are fixed

Note 1 to entry: The vane shaft may be connected directly to the force or torque measurement equipment in a *downhole test* (3.1.5) or connected to it via extension rods in an *uphole test* (3.1.22).

Documents
Document Sharing Hub

© ISO 2020 – All rights reserved

Full document details: BS EN ISO 22476-9:2020

3.1.26
waiting time
time between reaching the *test depth* (3.1.17) and beginning of application of the torque to the vane

3.1.27
zero shift
difference between the *internal friction torque* (3.1.9) readings of the measuring equipment prior to and after completion of the test

3.1.28
sensitivity
ratio between the undisturbed and remoulded undrained shear strengths

3.2 Symbols

Symbol	Name	Description	Unit
$A_{cone,bott}$		Lateral shear surface area of the bottom cone	mm^2
$A_{cone,top}$		Lateral shear surface area of the top cone	mm^2
$A_{cylinder}$		Lateral shear surface area of the cylinder	mm^2
α		Measured total angle between the vertical axis and the axis of the vane	°
β_1		Measured angle between the vertical axis and the projection of the axis of the field vane on a fixed vertical plane	°
β_2		Measured angle between the vertical axis and the projection of the axis of the field vane on a vertical plane that is perpendicular to the plane of angle β_1	°
C	Protective casing	Defined by term 3.1.11	
c_u	Undrained shear strength	Shear resistance of fine-grained soils in the undrained condition	kPa
c_{fv}	Field vane strength	Peak shear strength of soil, derived from the maximum torque measured by field vane test	kPa
$c_{fv\text{-}f}$	Fast field vane strength	Peak shear strength of soil, derived from the maximum torque measured by fast field vane test	kPa
c_{pv}	Post-peak field vane strength	Post-peak shear strength of soil, selected after desired rotation after field vane strength	kPa
c_{rv}	Remoulded field vane strength	Shear strength, as measured by field vane test, after remoulding the soil	kPa
D	Downhole measuring equipment	Equipment for measuring torque and rotation are located close to the vane	
D*	Downhole measuring equipment	Equipment for measuring torque is located close to the vane, but equipment for measuring rotation is located above the ground surface	
D		Diameter of the vane	mm
d		Diameter of vane shaft immediately behind vane	mm
D_c		Diameter of lower end of protective casing	mm
D_{ps}		Diameter of protection shoe	mm
F	Friction reducer	Defined by term 3.1.7	
H		Height of the vane	mm
H_T		The height of the vertical side of the tapered vane excluding the height influence of tapering(s).	mm
i_T		Angle of the taper at vane top	°
i_B		Angle of the taper at vane bottom	°

© ISO 2020 – All rights reserved
Documents
Document Sharing Hub
Full document details: BS EN ISO 22476-9:2020

Symbol	Name	Description	Unit
R	Rotation unit	Rotation unit can be located close to the vane or above the ground surface	
R_a	Area ratio	Cross-sectional area ratio of vane and vane shaft compared to circular shear surface	—
r		Radius of the rounded corner of the vane plate	mm
$r_{cone,bott}$		Lever arm of the lateral surface of the bottom cone of shear surface	mm
$r_{cone,top}$		Lever arm of the lateral surface of the top cone	mm
$r_{cylinder}$		Lever arm of the lateral surface of the cylinder	mm
S	Slip coupling	Defined by term 3.1.16	
S_{fv}	Field vane sensitivity	The ratio between the field vane and remoulded field vane strengths	—
s		Thickness of the vane plates	mm
T	Torque	Torque measured during vane rotation, corrected for external friction torque reading	Nm
$T_{cone,bott}$		Component of torque required to shear the bottom cone of the shear surface	Nm
$T_{cone,top}$		Component of torque required to shear the top cone of the shear surface	Nm
T_{corner}		Component of torque required to shear a quarter circular shear surface	Nm
$T_{cylinder}$		Component of torque required to shear the side surface of the cylinder	Nm
T_{ext}	External friction torque reading	Stable output of measuring equipment during rotation when there is no torque acting on the vane (usually measured prior to the vane engagement by slip coupling)	Nm
T_{ext*}	External friction torque reading after remoulding the soil	Stable output of measuring equipment during rotation after remoulding the soil when there is no torque acting on the vane (usually measured prior to the vane engagement by slip coupling)	Nm
T_{int}	Internal friction torque reading prior to test	Stable output of measuring equipment during rotation when there is no torque acting on the vane and no friction acting on the extension rods	Nm
T_{max}	Maximum torque	Torque required to obtain failure in the soil around the vane, corrected for internal and external friction torque reading(s) if relevant	Nm
$T_{meas,max}$	Maximum measured torque	Measured torque required to obtain failure in the soil around the vane, including external friction. The maximum torque (T_{max}) can be calculated by subtracting T_{ext} from $T_{meas,max}$ ($T_{max} = T_{meas,max} - T_{ext}$) otherwise $T_{meas,max}$ is T_{max}	Nm
$T_{meas,pv}$	Measured post-peak torque	Measured post-peak torque selected after the desired rotation (post peak strength measurement) including external friction torque. The post-peak torque is calculated by subtracting T_{ext} from $T_{meas,pv}$ ($T_{pv} = T_{meas,pv} - T_{ext}$) otherwise $T_{meas,pv}$ is T_{pv}	Nm
$T_{meas,rv}$	Measured torque for remoulded conditions	The constant measured torque value after remoulding including external friction torque. The torque for the remoulded condition is calculated by subtracting T_{ext} from $T_{meas,rv}$ ($T_{rv} = T_{meas,rv} - T_{ext}$) otherwise $T_{meas,rv}$ is T_{rv}	Nm
T_{plate}		Torque caused by shearing of circular plate shear surface	Nm
T_{pv}	Post-peak torque	Post-peak torque selected after maximum torque, corrected for internal and external friction torque reading(s) if relevant	Nm
T_{rv}	Torque for remoulded conditions	Measured constant torque value after remoulding the soil, corrected for internal and external friction torque reading(s) if relevant	Nm

© ISO 2020 – All rights reserved

Documents
Document Sharing Hub
Full document details: BS EN ISO 22476-9:2020

Symbol	Name	Description	Unit
τ	Shear stress	Stress acting along the failure surface due to external shear force	kPa
U	Uphole measuring equipment	A continuous torque measuring equipment located above the ground surface at the point for insertion of the vane	
W	Mechanical measuring device	A torque wrench or a dial indicator spring with variable lever arm	
X	Protective casing with protection shoe	Protective casing defined by term 3.1.11 and accordingly protective shoe by term 3.1.10	

4 Equipment and configurations

4.1 Test equipment

The test equipment shall include a vane and vane shaft, extension rods, rotation unit and a rotation/torque measuring equipment.

Accessories to the test equipment may include:

— a friction reducer;

— a slip coupling;

— a protective casing;

— a protective casing with protection shoe,

which are used to increase the insertion length that can be achieved and will reduce or enable to measure the friction in the system.

4.1.1 Vane and vane shaft

The vane shall consist of four identical vane plates fixed at 90° to each other with a tolerance of ±1°, see Figure 1.

NOTE 1 For practical reasons, uncased vanes can have rounded corners or can be tapered.

The shape should be rectangular with an H/D ratio of 2.

NOTE 2 An example of a mould to measure and verify the dimensions and H/D ratio requirements of the vane is given in Annex C.

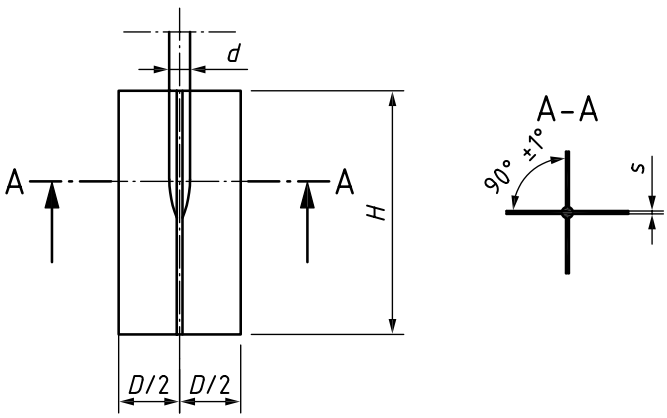

Figure 1 — Principal design of the vane

© ISO 2020 – All rights reserved
Documents
Document Sharing Hub
Full document details: BS EN ISO 22476-9:2020