BRITISH STANDARD

BS EN ISO 23667:2007

Packaging — Transport packaging for dangerous goods — Rigid plastics and plastics composite IBCs — Compatibility testing

The European Standard EN ISO 23667:2007 has the status of a British Standard

ICS 13.300; 55.020

NO COPYING WITHOUT BSI PERMISSION EXCEPT AS PERMITTED BY COPYRIGHT LAW

Document Sharing Hub
British Standards

Full document details: BS EN ISO 23667:2007

National foreword

This British Standard is the UK implementation of EN ISO 23667:2007.

The UK participation in its preparation was entrusted by Technical Committee PKW/0, Packaging, to Subcommittee PKW/0/4, Dangerous goods.

A list of organizations represented on this committee can be obtained on request to its secretary.

This publication does not purport to include all the necessary provisions of a contract. Users are responsible for its correct application.

Compliance with a British Standard cannot confer immunity from legal obligations.

This British Standard was published under the authority of the Standards Policy and Strategy Committee on 28 September 2007

© BSI 2007

ISBN 978 0 580 54949 6

Amendments issued since publication

Amd. No.	Date	Comments

Documents
Document Sharing Hub

Full document details: BS EN ISO 23667:2007

EUROPEAN STANDARD

NORME EUROPÉENNE

EUROPÄISCHE NORM

EN ISO 23667

July 2007

ICS 55.020; 13.300

English Version

Packaging - Transport packaging for dangerous goods - Rigid plastics and plastics composite IBCs - Compatibility testing (ISO 23667:2007)

Emballages - Emballages de transport pour marchandises dangereuses - Grands récipients pour vrac en plastique rigide et en plastique composite - Essais de compatibilité (ISO 23667:2007)

Verpackung - Verpackungen zur Beförderung gefährlicher Güter - Starre Kunststoff-IBC und Kombinations-IBC mit Kunststoffinnenbehälter - Verträglichkeitsprüfung (ISO 23667:2007)

This European Standard was approved by CEN on 20 June 2007.

CEN members are bound to comply with the CEN/CENELEC Internal Regulations which stipulate the conditions for giving this European Standard the status of a national standard without any alteration. Up-to-date lists and bibliographical references concerning such national standards may be obtained on application to the CEN Management Centre or to any CEN member.

This European Standard exists in three official versions (English, French, German). A version in any other language made by translation under the responsibility of a CEN member into its own language and notified to the CEN Management Centre has the same status as the official versions.

CEN members are the national standards bodies of Austria, Belgium, Bulgaria, Cyprus, Czech Republic, Denmark, Estonia, Finland, France, Germany, Greece, Hungary, Iceland, Ireland, Italy, Latvia, Lithuania, Luxembourg, Malta, Netherlands, Norway, Poland, Portugal, Romania, Slovakia, Slovenia, Spain, Sweden, Switzerland and United Kingdom.

EUROPEAN COMMITTEE FOR STANDARDIZATION
COMITÉ EUROPÉEN DE NORMALISATION
EUROPÄISCHES KOMITEE FÜR NORMUNG

Management Centre: rue de Stassart, 36 B-1050 Brussels

© 2007 CEN All rights of exploitation in any form and by any means reserved worldwide for CEN national Members.

Ref. No. EN ISO 23667:2007: E

Documents
Document Sharing Hub

Full document details: BS EN ISO 23667:2007

Foreword

This document (EN ISO 23667:2007) has been prepared by Technical Committee CEN/TC 261 "Packaging", the secretariat of which is held by AFNOR, in collaboration with Technical Committee ISO/TC 122 "Packaging".

This European Standard shall be given the status of a national standard, either by publication of an identical text or by endorsement, at the latest by January 2008, and conflicting national standards shall be withdrawn at the latest by January 2008.

According to the CEN/CENELEC Internal Regulations, the national standards organizations of the following countries are bound to implement this European Standard: Austria, Belgium, Bulgaria, Cyprus, Czech Republic, Denmark, Estonia, Finland, France, Germany, Greece, Hungary, Iceland, Ireland, Italy, Latvia, Lithuania, Luxembourg, Malta, Netherlands, Norway, Poland, Portugal, Romania, Slovakia, Slovenia, Spain, Sweden, Switzerland and United Kingdom.

Documents
Document Sharing Hub

Full document details: BS EN ISO 23667:2007

INTERNATIONAL STANDARD

ISO 23667

First edition
2007-07-15

Packaging — Transport packaging for dangerous goods — Rigid plastics and plastics composite IBCs — Compatibility testing

Emballages — Emballages de transport pour marchandises dangereuses — Grands récipients pour vrac en plastique rigide et en plastique composite — Essais de compatibilité

Reference number
ISO 23667:2007(E)

Documents
Document Sharing Hub

Full document details: BS EN ISO 23667:2007

Documents
Document Sharing Hub

Full document details: BS EN ISO 23667:2007

Contents

Page

Foreword iv
Introduction v
1 Scope 1
2 Normative references 1
3 Terms and definitions 2
4 Test requirements 2
5 Selection and preparation of test IBCs 4
6 Facilities for testing 6
7 Conditioning procedures 7
Annex A (normative) **Standard liquids and applicability to polyethylene types** 9
Annex B (normative) **Small scale laboratory tests to assess packaged substances against standard liquids** 12
Annex C (informative) **Assimilation of packaged substance to standard liquids** 31
Bibliography 82

Documents
Document Sharing Hub

Full document details: BS EN ISO 23667:2007

Foreword

ISO (the International Organization for Standardization) is a worldwide federation of national standards bodies (ISO member bodies). The work of preparing International Standards is normally carried out through ISO technical committees. Each member body interested in a subject for which a technical committee has been established has the right to be represented on that committee. International organizations, governmental and non-governmental, in liaison with ISO, also take part in the work. ISO collaborates closely with the International Electrotechnical Commission (IEC) on all matters of electrotechnical standardization.

International Standards are drafted in accordance with the rules given in the ISO/IEC Directives, Part 2.

The main task of technical committees is to prepare International Standards. Draft International Standards adopted by the technical committees are circulated to the member bodies for voting. Publication as an International Standard requires approval by at least 75 % of the member bodies casting a vote.

Attention is drawn to the possibility that some of the elements of this document may be the subject of patent rights. ISO shall not be held responsible for identifying any or all such patent rights.

ISO 23667 was prepared by the European Committee for Standardization (CEN) Technical Committee CEN/TC 261, *Packaging*, in collaboration with ISO Technical Committee TC 122, *Packaging*, Subcommittee SC 3, *Performance requirements and tests for means of packaging, packages and unit loads (as required by ISO/TC 122)*, in accordance with the Agreement on technical cooperation between ISO and CEN (Vienna Agreement).

Documents
Document Sharing Hub
Full document details: BS EN ISO 23667:2007

Introduction

This International Standard was developed to provide requirements and test procedures to meet the compatibility provisions for plastics Intermediate Bulk Containers (IBCs) to contain liquids as set out in:

— the *European Agreement concerning the International Carriage of Dangerous Goods by Road* (ADR) (covering most of Europe) [2]; and

— the *Regulations concerning the International Carriage of Dangerous Goods by Rail* (RID) (covering most of Europe, parts of North Africa and the Middle East) [5].

This procedure is an alternative option to that set out in the *UN Recommendations on the Transport of Dangerous Goods* [1].

Plastics IBC material can be attacked by the chemical contents of the package. Such effects are caused by different mechanisms such as environmental stress cracking (ESC), chemical degradation and swelling.

The UN recommendations and the associated modal regulations require that all IBCs shall be assessed for compatibility with the substances which they are to contain. The UN text makes special reference to plastics IBCs for liquids. The procedure therein contains details of testing for six months at ambient temperature with the liquid to be carried. RID/ADR permits as an alternative the use of standard liquids to which this document refers.

The UN recommendations are given legal entity not only to ADR and RID, but also to

— the *International Maritime Dangerous Goods Code* (IMDG Code) (worldwide) [4].

These modal rules do not refer to the standard liquid tests, but they may still be acceptable as the UN provisions do not make the six month test a mandatory requirement.

The application of this International Standard will need to take account of the requirements of these international agreements and the relevant national regulations [6], [7] for domestic transport of dangerous goods.

Documents
Document Sharing Hub

Full document details: BS EN ISO 23667:2007

blank

Documents
Document Sharing Hub

Full document details: BS EN ISO 23667:2007

Packaging — Transport packaging for dangerous goods — Rigid plastics and plastics composite IBCs — Compatibility testing

WARNING — The use of this International Standard may involve hazardous materials and equipment. This International Standard does not purport to address all of the safety problems associated with its use. It is the responsibility of the user of this International Standard to establish appropriate safety and health practices and determine the applicability of regulatory limitations prior to use.

1 Scope

This International Standard specifies the requirements and test methods for compatibility testing of polyethylene-based plastics Intermediate Bulk Containers (IBCs) and composite IBCs with plastics inners containing liquids. The testing involves storage with the packaged substance, or with a standard liquid as defined in Annex A. Annex B describes small scale laboratory tests, which may be used to determine the assimilation of those products to be carried with the standard liquids.

This International Standard should be used in conjunction with one or more of the international regulations set out in the Bibliography.

2 Normative references

The following referenced documents are indispensable for the application of this document. For dated references, only the edition cited applies. For undated references, the latest edition of the referenced document (including any amendments) applies.

ISO 291, *Plastics — Standard atmospheres for conditioning and testing*

ISO 527-2, *Plastics — Determination of tensile properties — Part 2: Test conditions for moulding and extrusion plastics*

ISO 1133, *Plastics — Determination of the melt mass-flow rate (MFR) and the melt volume-flow rate (MVR) of thermoplastics*

ISO 1183-1, *Plastics — Methods for determining the density of non-cellular plastics — Part 1: Immersion method, liquid pyknometer method and titration method*

ISO 1628-3, *Plastics — Determination of the viscosity of polymers in dilute solution using capillary viscometers — Part 3: Polyethylenes and polypropylenes*

ISO 1872-2, *Plastics — Polyethylene (PE) moulding and extrusion materials — Part 2: Preparation of test specimens and determination of properties*

ISO 2818, *Plastics — Preparation of test specimens by machining*

ISO 11403-3, *Plastics — Acquisition and presentation of comparable multipoint data — Part 3: Environmental influences on properties*

Documents
Document Sharing Hub

Full document details: BS EN ISO 23667:2007

ISO 11542-2:1998, *Plastics — Ultra-high-molecular-weight polyethylene (PE-UHMW) moulding and extrusion materials — Part 2: Preparation of test specimens and determination of properties*

ISO 16467:2003, *Packaging — Transport packages for dangerous goods — Test methods for IBCs*

ISO/IEC 17025, *General requirements for the competence of testing and calibration laboratories*

ISO 16770, *Plastics — Determination of environmental stress crackinge (ESC) of polyethylene — Full- notch creep test (FNCT)*

3 Terms and definitions

For the purposes of this document, the following terms and definitions apply.

3.1
competent authority
any national regulatory body or authority designated or otherwise recognized as such for any purpose in connection with the regulations specified in the Bibliography

3.2
plastics IBCs
rigid plastics intermediate bulk containers and composite intermediate bulk containers with inner plastics receptacles (where “plastics” refers to certain types of polyethylene)

NOTE Certain types of polyethylene are listed in A.3.

3.3
packaged substance (chemical product)
dangerous liquid with which the IBC is to be filled for transport

NOTE IBCs used for solid packaged substances, which can become liquid at temperatures encountered during transport, should also meet the requirements of IBCs for liquids.

3.4
standard liquids
defined liquids that are representative in their effect for a specific kind of interaction between a packaged substance and the plastics IBC

NOTE A full description of the standard liquids can be found in A.2.

4 Test requirements

4.1 General

Plastics IBCs selected in accordance with Clause 5 shall be conditioned with the packaged substance or a standard liquid with which it is to be assimilated. Annex C contains a list of substances assimilated to standard liquids.

For other chemicals not listed in Annex C, small scale laboratory tests (see Annex B) shall be used to prove assimilation with standard liquids. The standard liquid chosen shall be at least as aggressive as the substance to be transported. Where the packaged substance to be filled cannot be assimilated with one of the standard liquids, the packaged substance itself shall be used and its specification recorded. In the event that the effect is more aggressive than that of the standard liquids, the six month procedure shall be followed, as given in 7.1, or alternatively, and with the exception of nitric acid $>$ 55 %, the accelerated procedure, as given in 7.2.

NOTE When the standard liquid is water, proof of chemical compatibility is not required.

Documents
Document Sharing Hub
Full document details: BS EN ISO 23667:2007

4.2 Conditioning

Plastics IBCs shall be conditioned in accordance with Clause 7 of this International Standard.

4.3 Post-conditioning inspection

At the end of the conditioning period, the IBCs shall be inspected for leakage. Where no leakage is apparent, testing in accordance with Clause 7 of ISO 16467:2003 shall commence within 21 days of the end of the conditioning period (see 7.3).

4.4 Applicability

The tests referred to in 4.5 to 4.10 below may not be applicable to all types of IBCs. See Table 1.

The following tests are applicable, as shown in the sequence of testing required.

Table 1 — Applicability of tests

Test	Rigid plastics IBC	Composite IBC with plastics inner receptacle
4.5 Bottom lift test	1st [a]	1st [a]
4.6 Top lift test	2nd [a]	2nd [a]
4.7 Stacking test — 28 days at 40 °C containing standard liquid	3rd [c]	3rd [b, c]
4.7 Stacking test — 24 h at ambient temperature (minimum 15 °C — see 7.1)	not required [f]	3rd [c, e, f]
4.8 Leakproofness test	4th	4th
4.9 Hydraulic pressure test	5th	5th
4.10 Drop test at –18 °C	6th	6th [d]

NOTE When mechanical tests, in accordance with ISO 16467, have been successfully carried out, it is not necessary to carry out tests 4.5 (Bottom lift test), 4.6 (Top lift test) and 4.7 (Stacking test) for composite IBCs with plastics inner receptacle.

[a] Where IBCs are designed for this method of handling.
[b] Not required where composite IBC has a non-plastics outer component that supports the stacking load.
[c] Where IBCs are designed to be stacked during transport.
[d] A second sample may be used for the drop test.
[e] Required where composite IBC has a non–plastics outer component that supports the stacking load.
[f] A second sample may be used for the stacking test.

4.5 Bottom lift test

When tested in accordance with 7.1 of ISO 16467:2003, there shall be no permanent deformation which renders the IBC, including base pallet, if any, unsafe for transport and no loss of contents.

4.6 Top lift test

When tested in accordance with 7.2 of ISO 16467:2003, there shall be no permanent deformation which renders the IBC including the base pallet, if any, unsafe for transport and no loss of contents.

AVA Documents
Document Sharing Hub

Full document details: BS EN ISO 23667:2007

4.7 Stacking test

When tested in accordance with 7.4 of ISO 16467:2003, there shall be no permanent deformation which renders the IBC, including the base pallet, if any, unsafe for transport and no loss of contents.

4.8 Leakproofness test

When tested in accordance with 7.5 of ISO 16467:2003, there shall be no leakage of air.

4.9 Hydraulic pressure test

When tested in accordance with 7.6 of ISO 16467:2003, there shall be no permanent deformation which renders the IBC unsafe for transport and leakage of liquid.

4.10 Drop test

When tested in accordance with 7.7 of ISO 16467:2003, there shall be no loss of contents. A slight discharge from a closure on impact shall not be considered as a failure of the IBC provided that no further leakage occurs.

4.11 Equivalent testing

The test methods described in this International Standard shall be considered to be the reference test methods.

Alternative methods may be used to demonstrate compliance with relevant regulations provided that:

— their equivalency to the reference method can be demonstrated;

— their use is recorded in the test report;

— prior approval is obtained from the competent authority.

4.12 Test report

All IBC tests in conformity with this International Standard shall be the subject of a test report and specification check in accordance with Annex C of ISO 16467:2003. It shall be possible to specifically identify the IBC relative to each test report, either by the retention of the uniquely referenced IBCs, or by inclusion of sufficient photographs and/or drawings with unique references to enable identification of the IBC and all its components.

5 Selection and preparation of test IBCs

5.1 Selection of IBCs

One or two IBCs of each design type, for each filling substance to be tested, shall be selected at random from a production batch and submitted for testing.

IBCs shall be

a) at least 48 h old,

b) marked with a test reference number which shall also be entered on the test record and later used on the test report,

Documents
Document Sharing Hub
Full document details: BS EN ISO 23667:2007

c) individually weighed to establish the tare or the filled mass,

NOTE The form of such weighing may be varied to fit in with whether the IBCs have been supplied full or empty to the test station. Where the masses of individual empty IBCs are recorded, it is necessary to record only a typical filled mass (or vice versa).

d) examined for damage, etc., which might invalidate the tests.

The tests set out below should be applied to every design type of IBC, by polymer type and grade.

NOTE For selective testing, see ISO 16467:2003, Annex D.

5.2 Information to be provided with IBCs

Each IBC type shall be accompanied by specification(s) for that design type (in the appropriate format set out in Annex C of ISO 16467:2003) and by the following additional information as relevant.

The IBC user (with the assistance, where appropriate, of the IBC manufacturer and the test laboratory) shall identify the packaged substance. In the first instance, this process shall consist of identifying the plastics material concerned and its possible interactions, such as swelling, environmental stress cracking (ESC) and molecular degradation.

The specification forms for plastics IBCs should identify the material by polymer type and grade.

NOTE Where tests are carried out using the packaged substance, the test report may be applicable for other substances having equivalent or lesser chemical effects.

5.3 Filling of IBCs prior to testing

5.3.1 General

IBCs shall be filled for testing as follows.

a) For bottom and top lift tests, IBCs shall be prepared in accordance with 7.1 and 7.2 of ISO 16467:2003.

b) For the stacking test, IBCs shall be prepared in accordance with 7.4 of ISO 16467:2003.

c) For the leakproofness and hydraulic pressure tests, IBCs shall be prepared in accordance with 7.5 and 7.6 of ISO 16467:2003.

d) For the drop test, IBCs shall be filled in accordance with 5.3.3.1 of ISO 16467:2003.

5.3.2 Filling of IBC prior to testing

Filling of IBCs shall be carried out in accordance with the following:

The IBC shall be filled to not less than 98 % of the brimful capacity. The brimful (overflow) capacity is determined by weighing the empty IBC including closures, filling the IBC with water until the water just overflows, fitting the closure and then weighing the IBC full. Any surplus water is mopped up. No steps shall be taken, e.g. by tilting or tapping the IBC, to enable water to penetrate into a hollow lifting feature or other design feature above the closure.

The following formula expresses the brimful capacity:

$$b = \frac{W - m}{d} \qquad (1)$$

Documents
Document Sharing Hub
Full document details: BS EN ISO 23667:2007

where

b is the brimful capacity, in litres (l);

W is the mass of the IBC when brimful with water, in kilograms (kg);

m is the mass of the empty IBC, in kilograms (kg);

d is the density of water (1,0 kg/l).

When the brimful capacity has already been determined by testing in accordance with ISO 16467, this procedure is not necessary.

The calculation of required volume for testing shall be:

$$C = \frac{b \times 98}{100} \qquad (2)$$

where

C is the required volume of water, in litres (l);

b is the brimful capacity, in litres (l).

5.4 Closing IBCs

Screw type closures shall be tightened to the torque specified by the applicant where appropriate, which shall be recorded in the test report.

Closure torque shall not differ from one test to another in the test report. If it is necessary to revise a closure torque following a failure in one test, then all tests shall be completed using that torque setting.

All tests for a particular liquid shall be carried out at the same torque.

NOTE The closure torque may vary for different seals.

It is not necessary to apply the specified torque during the conditioning period if this affects the subsequent performance of the seal during the BC testing.

6 Facilities for testing

6.1 General requirements

Tests shall be carried out at a testing facility capable of meeting the operational provisions of ISO/IEC 17025.

NOTE This does not imply a requirement for the test laboratory to have attained third party certification or accreditation, but, if appropriate, such external approval may be obtained from either a national accreditation body or from the competent authority.

Testing staff should have a knowledge of the principles of the dangerous goods regulations, as set out in the UN recommendations.

6.2 Accuracy of measurement equipment

The accuracy of measuring equipment shall be more precise than the accuracy of the measurements in testing, as specified in 6.3, unless otherwise approved by the competent authority. The measuring equipment shall be calibrated in accordance with the relevant provisions of ISO/IEC 17025.

AVA Documents
Document Sharing Hub

Full document details: BS EN ISO 23667:2007

6.3 Accuracy of measurements in testing

Measurement equipment shall be selected such that individual measurement results including errors in reading and calibration shall not exceed the following tolerances:

Mass, in kilograms (kg):	± 2 %
Pressure, in kilopascals (kPa):	± 3 %
Distance / length, in millimetres (mm):	± 2 %
Temperature, in degrees Celsius (°C):	± 1 °C
Time, in minutes (min):	± 3 %
Torque, in newton·metres (Nm):	± 3 Nm or 10 %, whichever is the greater

NOTE For some measurements, the tolerances might be lower in order to have meaningful measurements, e.g. when measuring masses or dimensions of empty IBCs.

Where only maximum or minimum values are specified in the text, tolerances are one sided, e.g. in 7.2 the conditioning temperature may exceed 40 °C, but shall not be less.

6.4 Climatic conditions

There shall be adequate climatic facilities to meet the requirements in Clause 7 of ISO 16467:2003.

6.5 Impact surfaces for drop tests

The drop test area shall be horizontal and flat, massive enough to be immovable and rigid enough to be non-deformable under test conditions and sufficiently large to ensure that the test package falls entirely on the surface.

7 Conditioning procedures

7.1 Six months ambient conditioning

This test shall be carried out at ambient temperature for a period of 6 months.

For the purposes of this International Standard, ambient temperature, which shall be monitored and recorded, is considered to be not less than 15 °C.

NOTE The competent authority may, however, allow an extended period of test for temperatures below 15 °C.

7.2 Accelerated conditioning procedure

The IBCs for test shall be conditioned for 21 days at a minimum temperature of 40 °C with each standard liquid required.

The procedure shall be applied for polyethylene types as defined in A.3.1 and A.3.2. For other types of polyethylene such as defined in A.3.3 and A.3.4, the approval of the competent authority shall be obtained.

7.3 Procedure at the end of the conditioning period

At the end of the conditioning period, all IBCs, except those intended to withstand the stack test for 28 days at 40 ˚C (see Table 1), shall be emptied, rinsed, inspected for damage and prepared for test in accordance with the test procedures for plastics IBCs for liquids (ISO 16467). Testing shall commence within 21 days of the end of the conditioning period. If emptied the packaging shall be kept closed until testing commences.

AVA Documents
Document Sharing Hub

Full document details: BS EN ISO 23667:2007

IBCs which have been conditioned with standard liquid, *n*-butyl acetate, shall be emptied and refilled with a mixture of 1 % to 10 % aqueous wetting agent solution and 2 % *n*-butyl acetate for the stacking test.

NOTE For substances presenting a danger at 40 °C, it may be necessary to replace the filling substance by another substance where at least the same chemical interaction has been demonstrated and the agreement of the competent authority has been obtained.

The same closures and gaskets used during the conditioning of the IBCs shall be used for the rest of the tests, i.e. gaskets and closures shall not be replaced.

7.4 Reuse of standard liquids

The standard liquids shall be checked periodically in accordance with Table 2 as their effectiveness can be reduced over a period of time.

Table 2 — Reuse of standard liquids

Standard Liquid	Specification
Wetting solution	New solution for each test or check surface tension (see Annex A)
Acetic acid	Concentration (99 ± 1) %
Normal butyl acetate	⩾ 98 % [a]
Mixture of hydrocarbons	16 % to 21 % aromatic content [a]
Nitric acid	Concentration ⩾ 55 %

[a] It is recommended that the absorption of these standard liquids is periodically checked with a control specimen of polyethylene of defined type and grade, in accordance with B.4.1. The used standard liquid is no longer fit for purpose when the determined absorption deviates by more than 5 % from the original determined value.

Tests to monitor the quality of the standard liquids shall be done by appropriate means at intervals according to the frequency of usage.

Documents
Document Sharing Hub
Full document details: BS EN ISO 23667:2007

Annex A
(normative)

Standard liquids and applicability to polyethylene types

A.1 Introduction

The standard liquid system has been developed for the investigation of the compatibility of high molecular weight high density polyethylene, but it can also be applied to medium molecular weight polyethylene and to IBCs produced from the above polyethylene types where the surface or surfaces have been fluorinated.

When closures or closure elements are manufactured from materials other than those referred to in A.3, alternative suitable methods to investigate compatibility may be employed.

A.2 Definitions and applicability of standard liquids

A.2.1 Wetting solution

Wetting solution shall be used for substances causing severe cracking in polyethylene under stress, in particular for all solutions and preparations containing wetting agents.

An aqueous solution of 1 % to 10 % of a wetting agent shall be used. The surface tension of this solution shall be (31 to 35) $\times$ 10^{-3} N/m at 23 °C.

The stacking test shall be carried out on the basis of a relative density of not less than 1,2.

If adequate chemical compatibility is proved with a wetting solution, a compatibility test with acetic acid is not required.

In the case of filling substances, however, which cause polyethylene to stress crack more than wetting solution, adequate chemical compatibility may be proved after preliminary storage for 21 days at 40 °C in accordance with 7.2, using the original filling matter.

A.2.2 Acetic acid

Acetic acid shall be used for substances and preparations causing cracking in polyethylene under stress, in particular for monocarboxylic acids and monovalent alcohol, acetic acid of 98 % to 100 % concentration shall be used with a relative density equal to 1,05.

The stacking test shall be carried out on the basis of a relative density not less than 1,1.

In the case of filling substances causing polyethylene to swell more than acetic acid, and to such an extent that the polyethylene mass is increased by up to 4 %, adequate chemical compatibility may be proved after preliminary storage for 21 days at 40 °C, in accordance with 7.2, using the original filling matter.

A.2.3 Normal butyl acetate

Normal butyl acetate and normal butyl acetate-saturated wetting solution shall be used for substances and preparations that cause polyethylene to swell to such an extent that the polyethylene mass is increased by up to 4 % and, at the same time, causes cracking under stress, in particular for phyto-sanitary products, liquid paints and esters.

AVA Documents
Document Sharing Hub

Full document details: BS EN ISO 23667:2007

Normal butyl acetate of 98 % to 100 % concentration shall be used for preliminary storage in accordance with 7.2.

For the stacking test, in accordance with 4.7, a test liquid consisting of a 1 % to 10 % aqueous wetting solution conforming to A.2.1 shall be used mixed with 2 % normal butyl acetate.

The stacking test shall be carried out on the basis of a relative density not less than 1,0.

In the case of filling substances causing polyethylene to swell more than normal butyl acetate, and to such an extent that the polyethylene mass is increased by up to 7,5 %, adequate chemical compatibility may be proved after preliminary storage for 21 days at 40 °C, in accordance with 7.2 using the original filling matter.

A.2.4 Mixture of hydrocarbons (white spirit)

A mixture of hydrocarbons (white spirit) shall be used for substances and preparations causing polyethylene to swell, in particular for hydrocarbons, esters and ketones.

A mixture of hydrocarbons having a boiling range of (160 to 220) °C, a relative density of 0,78 to 0,80, a flash point above 50 °C and an aromatics content of 16 % to 21 % shall be used.

The stacking test shall be carried out on the basis of a relative density of not less than 1,0.

In the case of filling substances causing polyethylene to swell to such an extent that the polyethylene mass is increased by more than 7,5 %, adequate chemical compatibility may be proved after preliminary storage for 21 days at 40 °C, in accordance with 7.2 using the original filling matter.

A.2.5 Nitric acid

Nitric acid shall be used for all substances and preparations having an oxidizing effect on polyethylene and causing molecular degradation identical to or less than 55 % nitric acid.

Nitric acid in a concentration of not less than 55 % shall be used.

The stacking test shall be carried out on the basis of a relative density of not less than 1,4.

In the case of filling substances more strongly oxidizing than 55 % nitric acid or causing degradation of the molecular mass, proceed in accordance with 7.1.

A.2.6 Water

Water shall be used for substances which do not attack polyethylene in any of the cases referred to under A.2.1 to A.2.5, in particular for inorganic acids and lyes, aqueous saline solutions, polyvalent alcohols and organic substances in aqueous solution.

The stacking test shall be carried out on the basis of a relative density of not less than 1,2.

If the testing has been carried out satisfactorily with at least one of the aqueous-based standard liquids, wetting solution or 55 % nitric acid, it is not necessary to carry out the testing with water, for the same test levels (packaging group, relative density, hydraulic pressure).

Documents
Document Sharing Hub

Full document details: BS EN ISO 23667:2007

A.3 Definitions of polyethylene types

A.3.1 High molecular weight high density polyethylene (PE-HD-HMW)

The natural relative (non-pigmented) density at 23 °C after annealing at 100 °C for 1 h shall be ⩾ 0,940 g/cm^3 in accordance with ISO 1183-1.

The melt flow rate at 190 °C per 21,6 kg load shall be ⩽ 12 g per 10 min in accordance with ISO 1133.

A.3.2 Medium molecular weight high density polyethylene (PE-HD-MMW)

The natural relative (non-pigmented) density at 23 °C after annealing at 100 °C for 1 h shall be ⩾ 0,940 g/cm^3 in accordance with ISO 1183-1.

The melt flow rate at 190 °C per 2,16 kg load shall be ⩽ 0,5 g per 10 min and ⩾ 0,1 g per 10 min in accordance with ISO 1133.

Alternatively, the melt flow rate at 190 °C per 5 kg load shall be ⩽ 3,0 g per 10 min and ⩾ 0,5 g per 10 min in accordance with ISO 1133.

A.3.3 Cross-linked polyethylene (PE-X)

PE-X is polyethylene having a changed chemical structure in which the major proportion of polymer chains are chemically connected with each other to form a three-dimensional network.

A.3.4 Linear medium density polyethylene

The natural relative (non-pigmented) density at 23 °C after annealing at 100 °C for 1 h shall be ⩾ 0,927 g/cm^3 and ⩽ 0,937 g/cm^3 in accordance with ISO 1183-1.

The melt flow rate at 190 °C per 2,16 kg load shall be ⩾ 5,0 g per 10 min and ⩽ 10,0 g per 10 min in accordance with ISO 1133.

AVA Documents
Document Sharing Hub

Full document details: BS EN ISO 23667:2007

Annex B
(normative)

Small scale laboratory tests to assess packaged substances against standard liquids

B.1 Introduction

The small scale laboratory tests listed as follows shall be used to assess whether a packaged substance can be assimilated to a standard liquid for specific grades of polyethylene (high molecular weight high density polyethylene and medium molecular weight high density polyethylene, additionally cross-linked polyethylene and linear medium density polyethylene).

For the cross-linked polyethylene and linear medium density polyethylene, the prior agreement of the competent authority shall be obtained.

Three tests cover specific interactions between the packaged substance and the plastics material. These are:

— Method A: absorption (one procedure);

— Method B: environmental stress cracking (three procedures);

— Method C: molecular degradation (three procedures).

NOTE Where alternative procedures are described, each procedure may be regarded as equivalent.

B.2 Requirements

B.2.1 Resistance to absorption (swelling)

For Method A (B.4.1), the percentage weight increase when tested with the packaged substance to be carried shall be equal or less than that figure obtained when tested with the applicable standard liquid.

B.2.2 Resistance to environmental stress cracking

For Procedure B1 (B.4.2.2), the results shall demonstrate that, with the packaged substance, there is a lesser or equal effect than with the standard liquid used as a control.

For Procedure B2 (B.4.2.3) and Procedure B3 (B.4.2.4), the results shall demonstrate that, with the packaged substance, there is a time interval to failure equal to or greater than with the standard liquid used as a control.

B.2.3 Resistance to molecular degradation

For Procedure C1 (B.4.3.3), the melt flow rate of the specimen of the material in contact with the packaged substance shall not exceed that of the same material in contact with 55 % nitric acid.

For Procedure C2 (B.4.3.4), the viscosity number of the sample of the material in contact with the packaged substance shall not be less than that of the same material in contact with 55 % nitric acid.

For Procedure C3 (B.4.3.5), the elongation at break of the sample in contact with the packaged substance shall not be less than that with the same material with 55 % nitric acid.

Documents
Document Sharing Hub
Full document details: BS EN ISO 23667:2007

B.2.4 Test report

A test report shall be prepared. The report shall include a full description of the packaged substance under test and the plastics material.

B.3 Selection and preparation of test specimens

B.3.1 A representative complete IBC (at least 48 h old) shall be supplied to the testing laboratory. Test specimens shall be prepared from material cut from this IBC.

By agreement with the competent authority, the tests may also be carried out on test specimens prepared from compression moulded or extruded sheet produced from a specific polymer grade and specified thickness.

B.3.2 Each test specimen shall have a means of identification.

B.3.3 Each test specimen shall be examined for damage, etc., which could invalidate the tests, e.g. surface imperfection or contamination.

B.3.4 For cross-linked polyethylene, only test specimens taken from the IBCs shall be used.

B.4 Test procedures

B.4.1 Resistance to absorption (Method A)

B.4.1.1 This method details the determination of the resistance to absorption of the plastics packaging when in contact with a packaged substance (see Figure B.1).

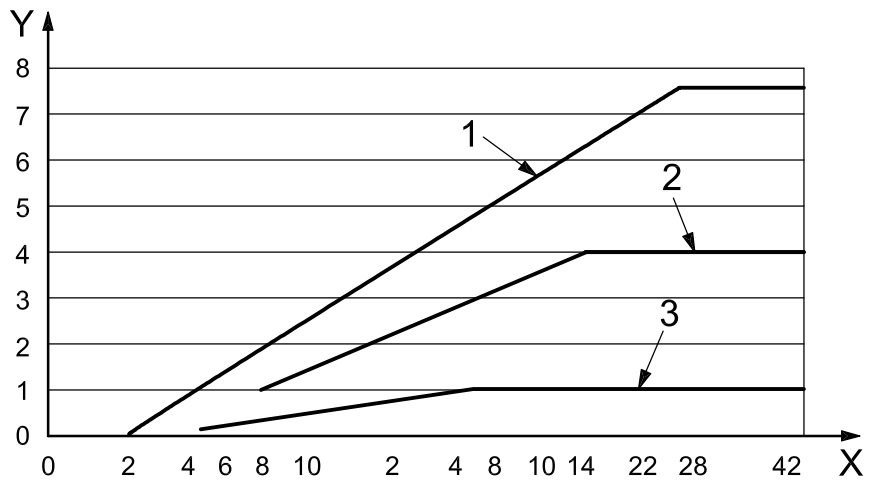

Key

X storage period, days

Y increase in mass due to swelling, %

1 mixture of hydrocarbons (white spirit)

2 normal butyl acetate

3 acetic acid

Figure B.1 — Determination of the absorption (increase in mass) of the samples immersed in the product at 40 °C

AVA Documents
Document Sharing Hub

Full document details: BS EN ISO 23667:2007

B.4.1.2 Cut at least three test specimens of area not less than 450 mm^2 from the centre of the container sidewall or from a compression moulded or extruded sheet.

B.4.1.3 Record the initial mass of each of the test specimens (W_0).

B.4.1.4 Keep the test specimens fully immersed in the packaged substance in a suitable receptacle.

B.4.1.5 Immerse the test specimens until absorption is complete, i.e. constant mass is reached. For normal test conditions with specimen thickness 2,0 mm or less and test temperature 40 °C, this is typically achieved within a test period of 28 days.

B.4.1.6 At the end of the test period or at appropriate test intervals, remove the test pieces, remove all traces of surface liquid, and record the mass of each test piece (W_1).

B.4.1.7 Use test specimens only once.

B.4.1.8 Results: Record the mean of three results to two significant figures.

The % mass increase, ΔW, is:

$$\Delta W = 100\ (W_1 - W_0)\ /\ W_0$$

where

W_0 is the initial mass;

W_1 is the mass at end of test period.

B.4.1.9 Criteria for assessment: The percentage mass increase, when tested with the packaged substance, shall be less than or equal to that obtained when tested with the appropriate standard liquid.

NOTE This can be expected to be:

— up to 1 % for water, wetting agent solution, acetic acid, or nitric acid;

— approximately 4 % for *n*-butyl acetate;

— approximately 7,5 % for mixture of hydrocarbons (white spirit).

B.4.2 Resistance to environmental stress cracking (Method B)

B.4.2.1 General

One of the following three alternative procedures shall be used to determine environmental stress cracking:

a) pin impression test (see B.4.2.2);

b) bent strip test (see B.4.2.3);

c) full notch creep test (see B.4.2.4)

B.4.2.2 Pin impression test (Procedure B1)

B.4.2.2.1 Special equipment required for test

B.4.2.2.1.1 Polished pins, made from material resistant to the product under test, e.g. stainless steel, glass, as specified in Figure B.2.

B.4.2.2.1.2 Tool for notching specimen to the required dimensions, as shown in Figure B.3. The notch radius shall be ⩽ 0,05 mm.

Documents
Document Sharing Hub
Full document details: BS EN ISO 23667:2007

Dimensions in millimetres

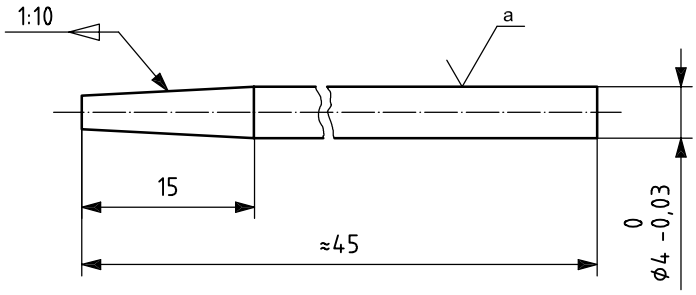

[a] Polished.

Figure B.2 — Polished pins for pin impression test

B.4.2.2.2 Preparation of test specimens

Cut at least 70 specimens from the packaging, or from a compression moulded or extruded sheet. Each test specimen shall be not less than 50 mm long, 30 mm wide and 2 mm or greater in thickness. The test specimen shall be notched and a hole drilled (3 mm in diameter) in accordance with Figure B.3.

The distance between the bottom of the notch and the edge of the hole shall be (5 ± 0,1) mm or (4 ± 0,1) mm, the latter being used to shorten the testing time with certain grades of polyethylene.

Dimensions in millimetres

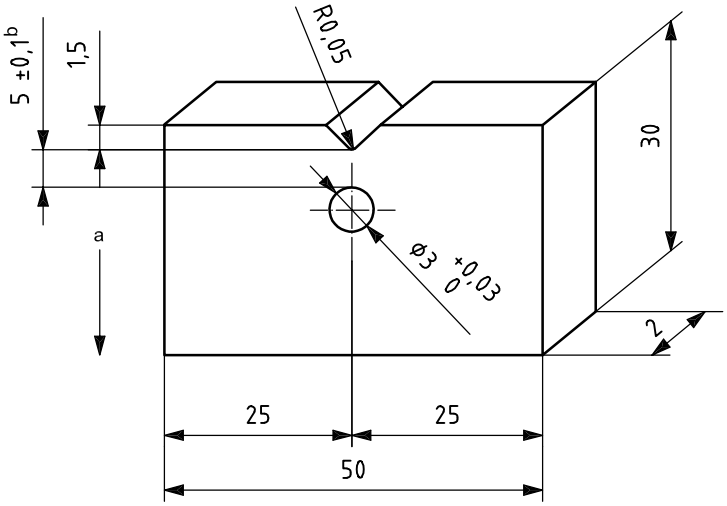

[a] Direction of extrusion.

[b] The 5 mm dimension may be 4 mm where appropriate, in which case, the 1,5 mm dimension is increased to 2,5 mm.

Figure B.3 — Test specimen for pin impression test

B.4.2.2.3 Preconditioning procedure

Immerse test specimens in both the packaged substance and the standard liquid for a period of 21 days at either (40 ± 1) °C or a higher specified temperature controlled to ± 1 °C, the latter being used to shorten the test time with certain grades of polyethylene.

Where it has been shown that this pre-conditioning effect has no effect on test liquids and assimilated products, this step may be eliminated.

AVA Documents
Document Sharing Hub

Full document details: BS EN ISO 23667:2007

B.4.2.2.4 Stress cracking test

Immerse an equal number of specimens in both the packaged substance and the standard liquid; normally, this is wetting solution or acetic acid.

n-Butyl acetate may be used where it is intended to show the combined effect of stress cracking and absorption. This depends on the results of Method A (see B.4.1).

At the end of the storage period, remove the test pieces, and put aside 10 specimens. Insert the polished pin (B.4.2.2.1.1) into the 3 mm hole in each of the remaining specimens. The pin shall penetrate the test piece until the parallel section of the pin is inserted into the hole.

Return these pinned pieces to the liquids and immerse as in B.4.2.2.3, except for *n*-butyl acetate where the stress cracking test is performed in a mixture of 1 % to 10 % aqueous wetting agent solution mixed with 2 % *n*-butyl acetate (see B.2.2).

At appropriate intervals, remove 10 pieces and allow them to cool to room temperature. Remove the pins carefully. Cut each across the 3 mm hole parallel to the notched edge (see Figure B.4). Carry out a tensile test on the notched part of each of the test pieces no longer than 8 h after removal from the test liquid.

Determine the tensile strength in accordance with ISO 527-2 at (23 ± 2) °C with a testing speed of 20 mm/min.

Calculate the mean tensile strength of each set of test pieces. Graphically plot the residual tensile strength as a percentage of the tensile strength of the original 10 test pieces which were put aside after pre-storage.

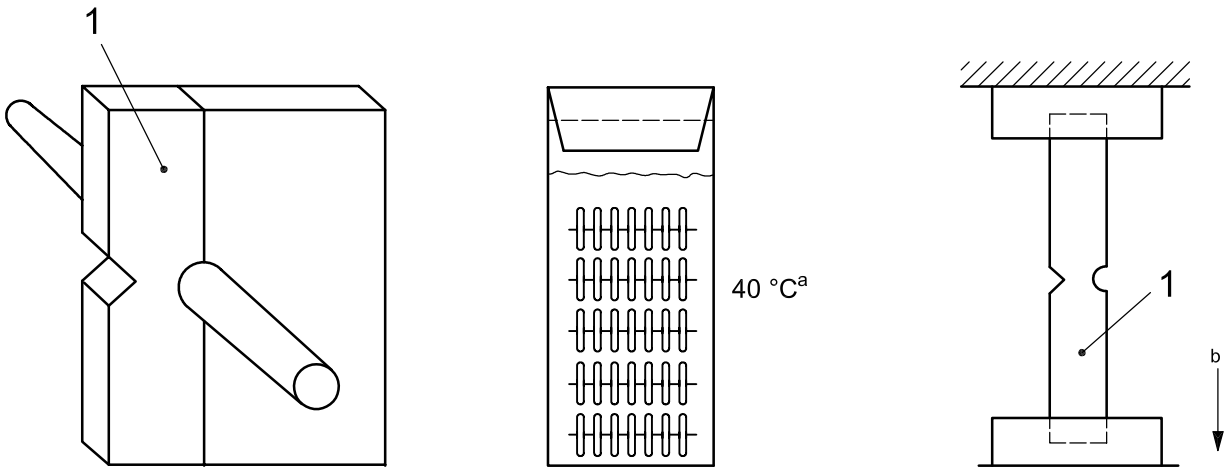

a) Test sample with pin **b) Storage in filling substance** **c) Tensile test**

Key

1 test sample section A

a 40 °C or 50 °C where appropriate.

b Testing speed, v = 20 mm/min.

Figure B.4 — Pin impression test: specimen preparation, storage and testing

Documents
Document Sharing Hub
Full document details: BS EN ISO 23667:2007

B.4.2.2.5 Criteria for assessment

Compare the curves to determine whether the packaged substance has a stronger or weaker effect than the standard liquid, as shown, e.g. in Figure B.5.

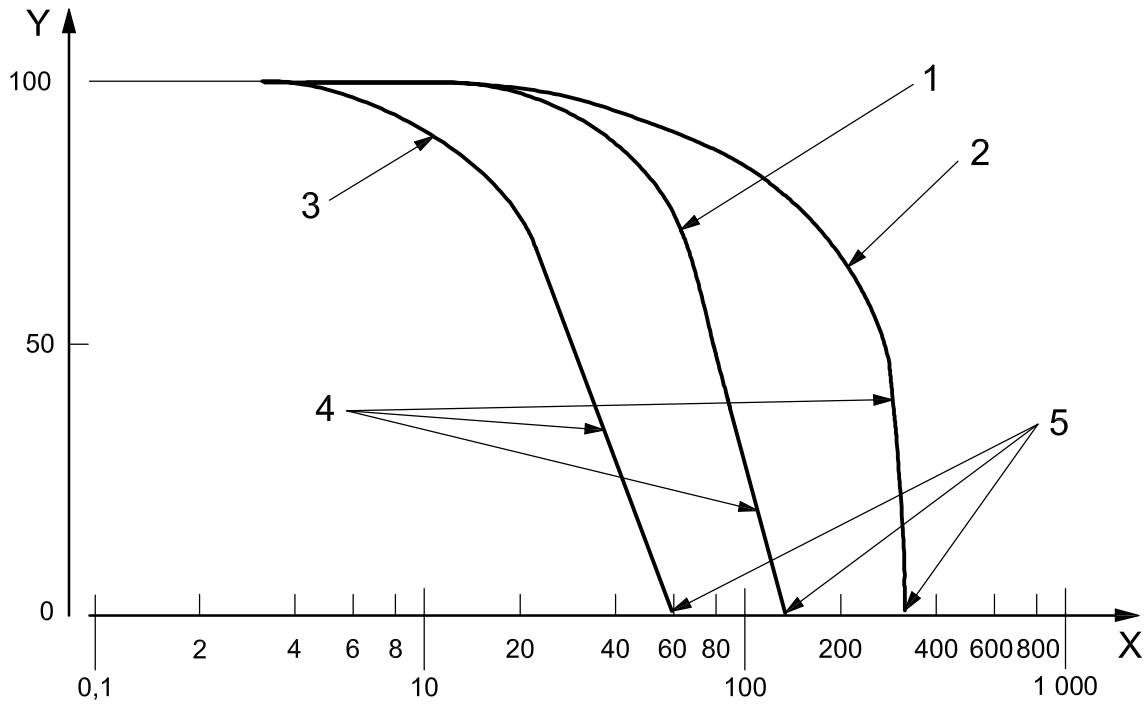

Key

X storage period, days

Y residual tensile strength, σmax,%

1 standard liquid

2 filling substance 2 (less aggressive than standard liquid)

3 filling substance 1 (more aggressive than standard liquid)

4 residual tensile strength curves

5 time standing until test sample is cracked through

Figure B.5 — Pin impression test

An alternative visual method of assessment of specimen failure times may be used.

15 samples as in B.4.2.2.2 are preconditioned as per B.4.2.2.3 and subjected to the stress cracking method as in B.4.2.2.4. By visual checks, the time for cracking is determined for each pinned test sample (the crack usually propagates from the tip of the notch to the pin). The criterion for assessment is based on the time for 8 of the 15 specimens in the standard liquid to have failed (T). For the packaged substance, this time shall not be less than T.

This alternative method may be used with the approval of the competent authority.

B.4.2.3 Bent strip test — “Bell telephone test” (Procedure B2)

B.4.2.3.1 Principle

This procedure uses specimens with a controlled imperfection (notch) in accordance with ASTM D 1693-00.

AVA Documents
Document Sharing Hub

Full document details: BS EN ISO 23667:2007

B.4.2.3.2 Special equipment

Slot notching tool, transfer tool, bending tool, see Figures B.6, B.7 and B.8.

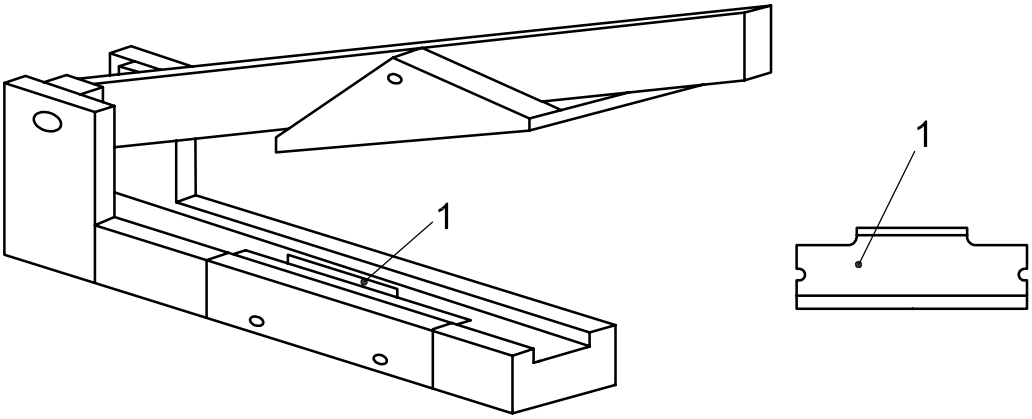

Key

1 blade

Figure B.6 — Slot notching tool

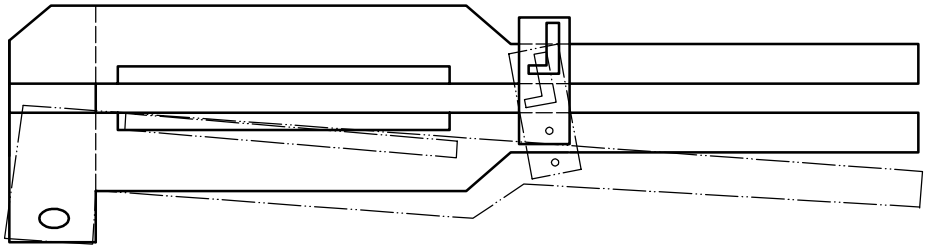

Figure B.7 — Transfer tool

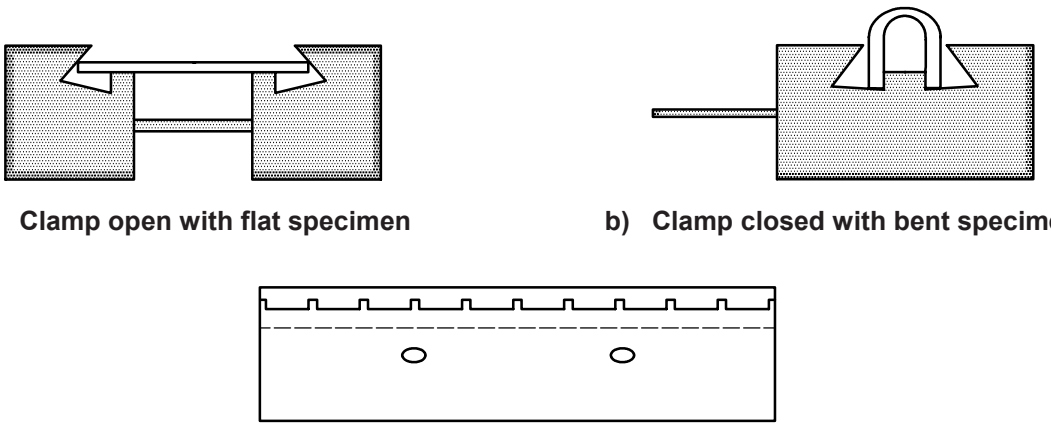

a) Clamp open with flat specimen **b) Clamp closed with bent specimen**

Figure B.8 — Specimen bending tool

Documents
Document Sharing Hub
Full document details: BS EN ISO 23667:2007

B.4.2.3.3 Preparation of test specimens

Cut a suitable number of test specimens from the packaging side wall, or from a compression moulded or extruded sheet. Test specimens cut from the container shall be subsequently compression moulded, using a specified moulding temperature and cooling rate in accordance with ISO 1872-2 Method B.

The finished thickness shall be (1,875 ± 0,125) mm.

Cut out 10 test specimens of dimensions (38,0 ± 2,5) mm × (13,0 ± 0,8) mm from the moulded sheet with a sharp cutting die. Do not cut test specimens from within 10 mm of the edge of the moulded sheet. Check that all the test pieces are within the specified thickness tolerances.

Using a sharp blade and jig, notch each test specimen centrally over a length of (19,05 ± 0,15) mm and a depth of (0,35 ± 0,05) mm.

B.4.2.3.4 Pre-conditioning procedure

Immerse the test specimens in the product under evaluation for 21 days at 40 °C or a higher specified temperature controlled to ± 1,0 °C.

Where it has been shown that this pre-conditioning has no effect on test liquids and assimilated products, this step may be eliminated.

B.4.2.3.5 Stress cracking test

Place the test specimens, notch side upwards in a bending clamp and, using a vice, close the clamp over a period of approximately 30 s.

Using a transfer tool, carefully remove the test specimens from the clamp and place them in the specimen holder, a channel of length 165 mm, depth 10 mm, and internal width (11,75 ± 0,05) mm. Gently press down the test specimens to ensure that they are all firmly against the base of the channel, see Figure B.9.

Place the channel in a suitable receptacle and cover it with the product under evaluation. Store at a temperature of 40 °C or a higher specified temperature controlled to ± 1 °C.

Inspect each test piece at suitable test intervals (normally daily) and record as a failure any test piece that shows a visible defect, usually a crack running at right angles to the notch.

The test shall be terminated when all specimens have failed or after 1 000 h.

Documents
Document Sharing Hub

Full document details: BS EN ISO 23667:2007