BS EN ISO 27509:2020

BSI Standards Publication

Petroleum and natural gas industries — Compact flanged connections with IX seal ring

Documents
Document Sharing Hub

Full document details: BS EN ISO 27509:2020

National foreword

This British Standard is the UK implementation of EN ISO 27509:2020. It is identical to ISO 27509:2020. It supersedes BS EN ISO 27509:2012, which is withdrawn.

The UK participation in its preparation was entrusted to Technical Committee PSE/17/-/6, Processing equipment and systems for petroleum and natural gas industries.

A list of organizations represented on this committee can be obtained on request to its committee manager.

This publication does not purport to include all the necessary provisions of a contract. Users are responsible for its correct application.

© The British Standards Institution 2020
Published by BSI Standards Limited 2020

ISBN 978 0 539 04559 8

ICS 23.040.60

Compliance with a British Standard cannot confer immunity from legal obligations.

This British Standard was published under the authority of the Standards Policy and Strategy Committee on 31 December 2020.

Amendments/corrigenda issued since publication

Date	Text affected

Documents
Document Sharing Hub

Full document details: BS EN ISO 27509:2020

EUROPEAN STANDARD

NORME EUROPÉENNE

EUROPÄISCHE NORM

EN ISO 27509

December 2020

ICS 23.040.60

Supersedes EN ISO 27509:2012

English Version

Petroleum and natural gas industries - Compact flanged connections with IX seal ring (ISO 27509:2020)

Industries du pétrole et du gaz naturel - Raccordements à brides compactes avec bague d'étanchéité IX (ISO 27509:2020)

Erdöl- und Erdgasindustrie - Kompakte Flanschverbindungen mit IX Dichtungsring (ISO 27509:2020)

This European Standard was approved by CEN on 12 February 2020.

CEN members are bound to comply with the CEN/CENELEC Internal Regulations which stipulate the conditions for giving this European Standard the status of a national standard without any alteration. Up-to-date lists and bibliographical references concerning such national standards may be obtained on application to the CEN-CENELEC Management Centre or to any CEN member.

This European Standard exists in three official versions (English, French, German). A version in any other language made by translation under the responsibility of a CEN member into its own language and notified to the CEN-CENELEC Management Centre has the same status as the official versions.

CEN members are the national standards bodies of Austria, Belgium, Bulgaria, Croatia, Cyprus, Czech Republic, Denmark, Estonia, Finland, France, Germany, Greece, Hungary, Iceland, Ireland, Italy, Latvia, Lithuania, Luxembourg, Malta, Netherlands, Norway, Poland, Portugal, Republic of North Macedonia, Romania, Serbia, Slovakia, Slovenia, Spain, Sweden, Switzerland, Turkey and United Kingdom.

EUROPEAN COMMITTEE FOR STANDARDIZATION
COMITÉ EUROPÉEN DE NORMALISATION
EUROPÄISCHES KOMITEE FÜR NORMUNG

CEN-CENELEC Management Centre: Rue de la Science 23, B-1040 Brussels

© 2020 CEN All rights of exploitation in any form and by any means reserved worldwide for CEN national Members.

Ref. No. EN ISO 27509:2020 E

Documents
Document Sharing Hub

Full document details: BS EN ISO 27509:2020

European foreword

This document (EN ISO 27509:2020) has been prepared by Technical Committee ISO/TC 67 "Materials, equipment and offshore structures for petroleum, petrochemical and natural gas industries" in collaboration with Technical Committee CEN/TC 12 “Materials, equipment and offshore structures for petroleum, petrochemical and natural gas industries” the secretariat of which is held by NEN.

This European Standard shall be given the status of a national standard, either by publication of an identical text or by endorsement, at the latest by June 2021, and conflicting national standards shall be withdrawn at the latest by June 2021.

Attention is drawn to the possibility that some of the elements of this document may be the subject of patent rights. CEN shall not be held responsible for identifying any or all such patent rights.

This document supersedes EN ISO 27509:2012.

According to the CEN-CENELEC Internal Regulations, the national standards organizations of the following countries are bound to implement this European Standard: Austria, Belgium, Bulgaria, Croatia, Cyprus, Czech Republic, Denmark, Estonia, Finland, France, Germany, Greece, Hungary, Iceland, Ireland, Italy, Latvia, Lithuania, Luxembourg, Malta, Netherlands, Norway, Poland, Portugal, Republic of North Macedonia, Romania, Serbia, Slovakia, Slovenia, Spain, Sweden, Switzerland, Turkey and the United Kingdom.

Endorsement notice

The text of ISO 27509:2020 has been approved by CEN as EN ISO 27509:2020 without any modification.

Documents
Document Sharing Hub

Full document details: BS EN ISO 27509:2020

Contents

Page

Foreword ..... **v**

Introduction ..... **vii**

1 Scope **1**

2 Normative references **1**

3 Terms and definitions **2**

4 Abbreviations and symbols **2**
4.1 Abbreviated terms 2
4.2 Symbols 3

5 Design **5**
5.1 General 5
5.2 Design principles 6
5.3 Assembly requirements 8
5.4 Standard components 8
5.5 Units of measurements 9
5.6 Rounding 9
5.7 Conformance with piping design codes 9
5.8 Conformance with this document 10

6 Designation **10**
6.1 Designation of flanges 10
6.2 Designation of seal rings 10

7 Materials **11**
7.1 General 11
7.2 Flange materials 11
7.3 Bolting materials 11
7.4 Seal ring materials 12

8 Strength, pressure/temperature ratings and leak tightness **13**
8.1 General 13
8.2 Pressure/temperature ratings 13
8.3 Pressure testing and leak tightness 14

9 Dimensions of flanges **14**
9.1 General 14
9.2 Weld neck dimensions 15
9.3 Blind flange (BL) dimensions 23
9.4 Integral flange (IF) dimensions 26
9.5 Rigid interface dimensions 37
9.6 Dimensions of paddle blanks (PB) and paddle spacers (PS) 39
9.7 Handle and lifting lugs 41
9.8 Dimensions of orifice spacers (OS) 42
9.9 Dimensions of reducing threaded flanges 44
9.10 Auxiliary connections 45
9.11 Flange tolerances 45
9.12 Surface finish 47

10 Marking of flanges **48**
10.1 Flanges other than integral flanges 48
10.2 Manufacturer's name or trademark 48
10.3 Nominal size 48
10.4 Pressure class designation 48
10.5 Pipe dimensions 48
10.6 Material identification 48
10.7 Identification of internally threaded flanges 49

AVA Documents
Document Sharing Hub

© ISO 2020 – All rights reserved

Full document details: BS EN ISO 27509:2020

10.8 Material traceability ... 49
10.9 Marking examples ... 49
10.10 Stamping ... 49
11 Dimensions of seal rings ... 49
12 Manufacture, testing and inspection of IX seal rings ... 53
13 Coating and colour coding ... 53
14 Marking of seal rings ... 54
15 Quality management systems ... 54
16 Bolt dimensions and masses ... 54
Annex A (normative) **Pressure temperature ratings and load capacity ... 55**
Annex B (normative) **Integral flange angle selection ... 59**
Annex C (normative) **Bolt dimensions and masses ... 70**
Annex D (normative) **Handling, installation, assembly and repair of flanges ... 77**
Annex E (informative) **Mass of flanges ... 90**
Annex F (informative) **Metric bolting ... 100**
Annex G (informative) **Additional information on bibliographical references ... 102**
Bibliography ... 104

© ISO 2020 – All rights reserved
Documents
Document Sharing Hub
Full document details: BS EN ISO 27509:2020

Foreword

ISO (the International Organization for Standardization) is a worldwide federation of national standards bodies (ISO member bodies). The work of preparing International Standards is normally carried out through ISO technical committees. Each member body interested in a subject for which a technical committee has been established has the right to be represented on that committee. International organizations, governmental and non-governmental, in liaison with ISO, also take part in the work. ISO collaborates closely with the International Electrotechnical Commission (IEC) on all matters of electrotechnical standardization.

The procedures used to develop this document and those intended for its further maintenance are described in the ISO/IEC Directives, Part 1. In particular, the different approval criteria needed for the different types of ISO documents should be noted. This document was drafted in accordance with the editorial rules of the ISO/IEC Directives, Part 2 (see www.iso.org/directives).

Attention is drawn to the possibility that some of the elements of this document may be the subject of patent rights. ISO shall not be held responsible for identifying any or all such patent rights. Details of any patent rights identified during the development of the document will be in the Introduction and/or on the ISO list of patent declarations received (see www.iso.org/patents).

Any trade name used in this document is information given for the convenience of users and does not constitute an endorsement.

For an explanation of the voluntary nature of standards, the meaning of ISO specific terms and expressions related to conformity assessment, as well as information about ISO's adherence to the World Trade Organization (WTO) principles in the Technical Barriers to Trade (TBT), see www.iso.org/iso/foreword.html.

This document was prepared by Technical Committee ISO/TC 67, *Materials, equipment and offshore structures for petroleum, petrochemical and natural gas industries*, Subcommittee SC 6, *Processing equipment and systems,* in collaboration with the European Committee for Standardization (CEN) Technical Committee CEN/TC 12, *Materials, equipment and offshore structures for petroleum, petrochemical and natural gas industries,* in accordance with the Agreement on technical cooperation between ISO and CEN (Vienna Agreement).

This second edition cancels and replaces the first edition (ISO 27509:2012), which has been technically revised. It also incorporates the Technical Corrigendum ISO 27509:2012/Cor.1:2013. The main changes compared to the previous edition are as follows:

— Annexes B and D (Annex E in previous edition) have become normative annexes;

— more stringent quality requirements regarding manufacture of products and assembly instructions have been introduced. These include

  a) ultrasonic testing of products in accordance with new requirements in ASME VIII div. 2 (in Clause 7),

  b) requirements to material strength and machining strictly in accordance with given tolerances for IX seal rings (in Clause 12),

  c) new and better coating requirements for IX seal rings (in Clause 13 and Annex D),

  d) excluding use of IX seal rings to assist alignment by transfer of significant shear load during assembly (in Annex D),

  e) more comprehensive and detailed guidelines on the evaluation of damages to products and the repair of such damages (in Annex D),

  f) more comprehensive requirements to qualification of bolt tensioning procedures (in Annex D), and

© ISO 2020 – All rights reserved

Documents
Document Sharing Hub
Full document details: BS EN ISO 27509:2020

g) the elastoplastic deformation of flanges by first assembly has been better explained in 5.3 and in Annex D, in order to prevent unnecessary re-machining or rejection when flange bevel angles have changed.

Any feedback or questions on this document should be directed to the user's national standards body. A complete listing of these bodies can be found at www.iso.org/members.html.

© ISO 2020 – All rights reserved
Documents
Document Sharing Hub
Full document details: BS EN ISO 27509:2020

Introduction

This document, which is originally based on NORSOK L-005, has been developed to provide an International Standard for compact flanged connections that constitutes an alternative to conventional flanges as specified in ASME standards, European standards and other standards, with reduced mass and smaller overall dimensions, as well as increased reliability in leak tightness by means of its inherent design features and make up procedures. CFCs can also provide an alternative to other types of clamp and hub type mechanical connectors.

The use of load carrying sealing elements, traditionally referred to as "gaskets", does not conform with the requirements of this document.

This document has been developed for use in process piping systems, which are designed in accordance with codes for pressure piping, e.g. ASME B31.3. See 5.7 for more details.

The flange designs have been selected to achieve a minimum safety factor of 2,0 when subjected to a design pressure equal to ASME B16.5 pressure temperature ratings within the temperature limits of this document.

The main body of this document contains all necessary information on how to manufacture and supply flange and seal ring materials, such as

— flange dimensions and material requirements,

— seal ring dimensions and material requirements,

— bolting dimensions and material requirements,

— requirements to tolerances and surface finish, and

— requirements to designation and marking of finished products.

Annexes A, B, C and D cover the following topics:

— structural capacity equations for flange assemblies;

— how to apply the flanges to special geometries of valves and equipment nozzles;

— bolt dimensions and masses;

— installation and assembly instructions, and guidelines on how to repair damage and irregularities on sealing surfaces.

Annexes E, F and G cover the following topics:

— masses of all standard components;

— suitable dimensions of alternative metric bolting;

— additional information on bibliographical references.

In this document, the following verbal forms are used:

— "shall" indicates a requirement;

— "should" indicates a recommendation;

— "may" indicates a permission;

— "can" indicates a possibility or a capability.

© ISO 2020 – All rights reserved

Documents
Document Sharing Hub
Full document details: BS EN ISO 27509:2020

Petroleum and natural gas industries — Compact flanged connections with IX seal ring

1 Scope

This document specifies detailed manufacturing requirements for circular steel and nickel alloy compact flanged connections and associated seal rings, for designated pressures and temperatures in class designations CL 150 (PN 20) to CL 1500 (PN 260) for nominal sizes from DN 15 (NPS ½) to DN 1200 (NPS 48), and for CL 2500 (PN 420) for nominal sizes from DN 15 (NPS ½) to DN 600 (NPS 24).

NOTE NPS is expressed in accordance with ASME B36.10M and ASME B36.19M.

This document is applicable to welding neck flanges, blind flanges, paddle spacers and spacer blinds (paddle blanks), valve/equipment integral flanges, orifice spacers, reducing threaded flanges and rigid interfaces for use in process piping for the petroleum, petrochemical and natural gas industries.

This document is applicable within a temperature range from –196 °C to +250 °C.

This document is not applicable for external pressure.

2 Normative references

The following documents are referred to in the text in such a way that some or all of their content constitutes requirements of this document. For dated references, only the edition cited applies. For undated references, the latest edition of the referenced document (including any amendments) applies.

ISO 2768-1, *General tolerances — Part 1: Tolerances for linear and angular dimensions without individual tolerance indications*

ISO 4287, *Geometrical Product Specifications (GPS) — Surface texture: Profile method — Terms, definitions and surface texture parameters*

ISO 4288, *Geometrical Product Specifications (GPS) — Surface texture: Profile method — Rules and procedures for the assessment of surface texture*

ISO 5167-1, *Measurement of fluid flow by means of pressure differential devices inserted in circular cross-section conduits running full — Part 1: General principles and requirements*

ISO 5167-2:2003, *Measurement of fluid flow by means of pressure differential devices inserted in circular cross-section conduits running full — Part 2: Orifice plates*

ISO 14313, *Petroleum and natural gas industries — Pipeline transportation systems — Pipeline valves*

ISO 80000-1:2009, *Quantities and units — Part 1: General*

EN 1591-4, *Flanges and their joints — Part 4: Qualification of personnel competency in the assembly of the bolted connections of critical service pressurized systems*

EN 1779, *Non-destructive testing — Leak testing — Criteria for method and technique selection*

ASME B16.5, *Pipe Flanges and Flanged Fittings: NPS 1/2 through NPS 24 Metric/Inch Standard*

ASME B16.34, *Valves — Flanged, Threaded and Welding End*

ASME B1.20.1, *Pipe Threads, General Purpose (Inch)*

ASME B31.3:2018, *Process Piping*

© ISO 2020 – All rights reserved

Documents
Document Sharing Hub
Full document details: BS EN ISO 27509:2020

ASTM B568, *Standard Test Method for Measurement of Coating Thickness by X-Ray Spectrometry*

ASTM B571, *Standard Practice for Qualitative Adhesion Testing of Metallic Coatings*

ASME VIII *Div. 2: Boiler and Pressure Vessel Code — Alternative Rules*

3 Terms and definitions

For the purposes of this document, the following terms and definitions apply.

ISO and IEC maintain terminological databases for use in standardization at the following addresses:

— ISO Online browsing platform: available at https://www.iso.org/obp

— IEC Electropedia: available at http://www.electropedia.org/

3.1
class
CL
pressure class in accordance with specific values

Note 1 to entry: The values shall be in accordance with ASME B16.5 and ASME B16.34

3.2
compact flanged connection
CFL
non-gasketed bolted static pipe connection including two flanges and where the bolt loads are transferred through metal to metal contact between the flange faces

3.3
gasket
barrier to prevent the passage of fluids, but which does transmit all loads between flanges

3.4
purchaser
individual or organization that buys the pipe connection on behalf of the user and/or operator or for its own use

3.5
seal ring
component providing a barrier to prevent the passage of fluids, transmitting no significant loads between the flanges

3.6
supplier
individual or organization that takes the responsibility for the supply of the pipe connection

4 Abbreviations and symbols

4.1 Abbreviated terms

BL	blind flange
DN	nominal pipe diameter (expressed in millimetres)
ID	internal diameter
IF	integral flange (as part of some other equipment or component)

© ISO 2020 – All rights reserved
Documents
Document Sharing Hub
Full document details: BS EN ISO 27509:2020

IX	special metallic seal ring applied in this document
LB	line blinds (including PS and PB)
NPS	nominal pipe size (expressed in inches)
OD	outer diameter
OS	orifice spacer
PB	paddle blank
PN	nominal pressure (expressed in bar)
PS	paddle spacer
PTFE	polytetrafluoroethylene
RI	rigid interface
RT	reducing threaded flange
WN	weld neck

4.2 Symbols

A	outside diameter of neck
A_{max}	maximum outer diameter to accommodate standard tools
A_{min}	minimum neck outer diameter listed in Table 7 to Table 12
A_{C015}	cross-sectional area of the neck/pipe calculated from t_{015}
A_{Ceqv}	cross-sectional area of a special flange neck geometry calculated from Formula (B.1)
A_{Cb}	total cross-sectional area of bolting, based on root area
A_T	hub diameter of reducing threaded flange
a	maximum allowable alignment gap between mating flanges (see Figure D.4)
a_{Cb}	bolt root area
B	bore diameter, where the bore should not exceed the maximum listed bore in this document
B_{max}	maximum listed bore diameter
B_{min}	minimum bore diameter for which the face angles are valid
B_1	minimum bore diameter for flange to be blinded NOTE B_1 is also the start diameter for blind and reducing threaded flange face angles.
B_{CD}	bolt circle diameter
d_B	bolt size (nominal bolt diameter)
d_n	effective contact diameter of nut face (average between width of cross flats and diameter of bolt hole)

© ISO 2020 – All rights reserved

Documents
Document Sharing Hub
Full document details: BS EN ISO 27509:2020

d_p	average diameter of neck end = $(A+B)/2$
d_t	effective (mean) contact diameter of bolting threads
D_{A1}	internal diameter of groove
D_{A3}	outer diameter of groove
D_{Gn}	seal ring seal dimension (see Figure 13)
D_{W1}	inner recess diameter
D_{W2}	outer recess diameter
D_{W3}	outside diameter of flange
D_{W4}	flange to neck fillet outer diameter
e	radial distance between B_{CD} and d_p
E_1	depth of groove
E_2	depth of recess
F_A	applied axial force
F_{cB}	bolt total plastic capacity (root area × number of bolts × yield strength)
F_f	flange axial load capacity without effect of bolt prying
F_{fp}	flange axial load capacity including the effect of bolt prying
F_{End}	end cap force calculated to seal ring seal diameter
F_P	required bolt preload
F_R	resulting force from external tension force F_A and external bending moment M_A
f_y	flange material yield strength at temperature
f_{yb}	bolt material yield strength at temperature
H_{Gn}	seal ring seal dimension (see Figure 13)
H_{P1}	thickness of PB, PS and OS
H_{W3}	flange thickness
H_{W5}, H_{T5}	overall length
L	bolt hole diameter
L_1, L_2, L_3	bolt hole depths (see Figure 5 and Table 22)
l	clear bolt length between engaged threads with the nuts
M_A	applied bending moment
n	number of bolts
P_t	thread pitch of bolting

© ISO 2020 – All rights reserved
Documents
Document Sharing Hub
Full document details: BS EN ISO 27509:2020

p	internal pressure in N/mm^2
R	Radius
R_C	radius (maximum value tabulated)
R_{V1}	neck to flange ring radius on integral flanges
T	torque applied to the bolt
t	pipe wall thickness
t_{min}	minimum neck thickness that can be used which is defined by the standard pipe outer diameter, A, and maximum listed bore diameter, B_{max}.
t_{max}	maximum neck thickness that can be used which is defined by A_{max} and the minimum listed bore diameter
t_{015}	wall thickness giving the smallest possible face angle (0,15°)
t_{eqv}	equivalent wall thickness calculated from A_{Ceqv} over H_{W5}
W_f	Warping moment capacity of flange
X	half major ellipse axis
Y	half minor ellipse axis
α_{A2}	groove angle
α_{B1}	flange face bevel angle
α_{B2}	effective face angle/rear face bevel angle
Δ	fraction of the initially applied pre-stress lost in transfer of bolt load from tension tool to the nut
ψ	flange utilization ratio
μ_n	coefficient of friction of nut bearing surface
μ_t	coefficient of friction of bolting threads

5 Design

5.1 General

CFCs shall:

a) be designed for face-to-face make-up for transfer of the bolt loading through the flange faces;

b) be designed so that a static mode is maintained in the bolted joint up to 1,5 times the specified pressure/temperature rating, see 8.2. Static mode is maintained as long as the difference between maximum and minimum nominal stress sustained by the bolts in the joint does not exceed 5 % of the minimum values specified in Table 3;

c) be standardized to cover as a minimum the same pressure temperature class designations and sizes as can be found in ASME B16.5 with equal or better performance;

© ISO 2020 – All rights reserved

Documents
Document Sharing Hub
Full document details: BS EN ISO 27509:2020

d) be standardized to fit with commonly used standards by the valve industry [e.g. ASME B16.34, ISO 14313 and EN 12516 (all parts)], and other valve standards which make reference to these standards for pressure design;

e) conform with the applicable requirements in the piping or pressure vessel code agreed between the supplier and the purchaser.

The weakest part of flanged connections in accordance with this document regarding fatigue failure is always located somewhere in the transition from flange to pipe or flange to nozzle neck of an equipment or valve. The bolted joint itself is never subjected to fatigue load if considerations to cycling temperatures are taken when selecting bolt material, see 7.3.

Supplier specific CFCs may refer to this document when additional requirements to the minimum requirements specified in this document are agreed between purchaser and supplier. The intension is to allow alternative and additional designs to the products in this document without compromising any of the listed items a), b) and e) in this subclause as well as the requirements of 8.1 and 8.3.

5.2 Design principles

Figure 1 shows the design principles of compact flanges and its seal system in accordance with this document.

The flange face includes a slightly convex bevel with the highest point, called the heel, adjacent to the bore and a small outer wedge around the outer diameter of the flange. The assembly is made up by tightening/tensioning the flange bolting which pulls the two connector halves together. The bevel angles have been standardized for different and relevant adjoining pipe wall thicknesses for each welding neck flange of a given size and pressure class.

For the IX seal ring, axial forces are exerted on the taper of the metal seal ring and translated into a radial sealing force. Furthermore, with increased pre-load, the bevel is closed and face to face contact is achieved at the outer wedge while most of the bolt pre-load is transferred as compressive forces between the flange faces at the heel, as illustrated in Figure 1. The arrows in the figure indicate the applied forces/pressure and the contact forces after make-up and during normal operation.

© ISO 2020 – All rights reserved
Documents
Document Sharing Hub
Full document details: BS EN ISO 27509:2020

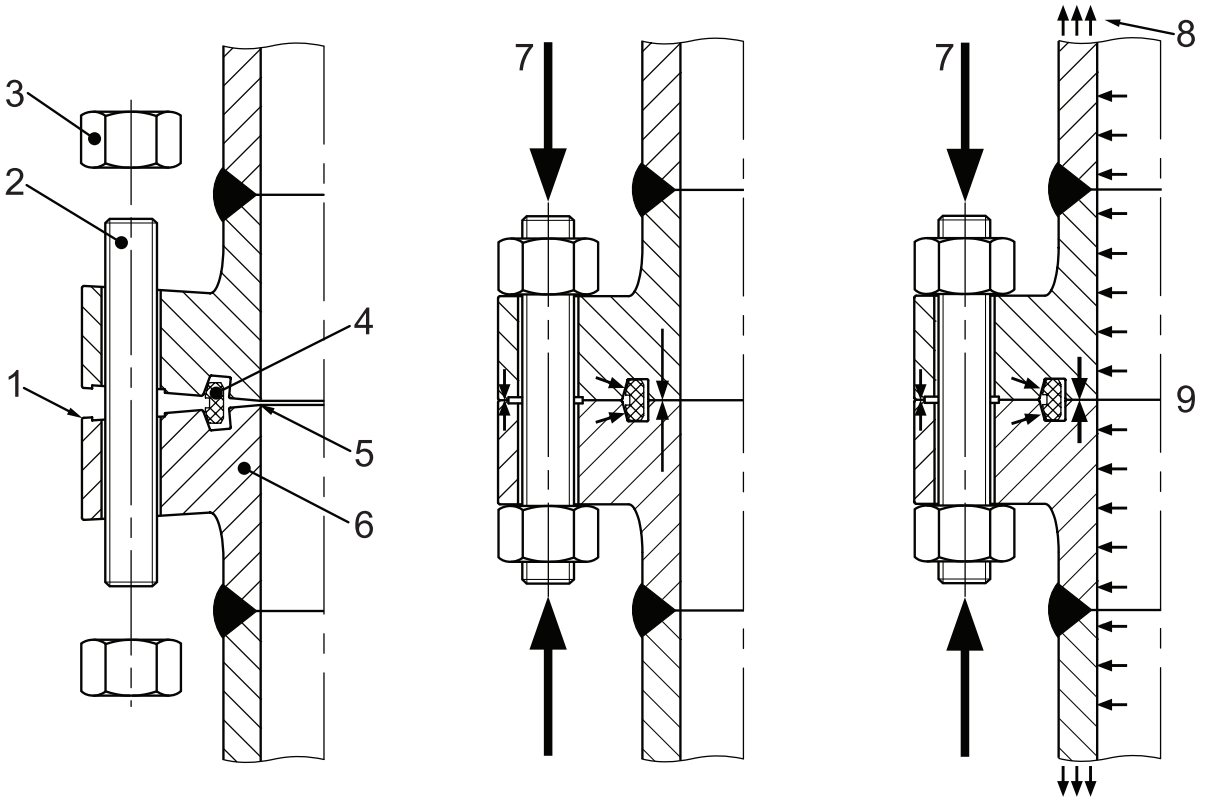

a) Before assembly **b) Completed assembly** **c) Design loads**

Key

1 wedge
2 stud
3 nut
4 IX seal ring
5 heel
6 weld neck flange
7 bolt clamping force
8 hydrostatic end force plus external loads
9 fluid pressure

Figure 1 — Design principles of standard compact flange assemblies

The principle design of the flange face includes two independent seals, which are based on different principles, a force controlled heel seal, and a displacement controlled seal provided by the seal ring. The first seal is created by application of seal seating stress at the flange heel. However, an undamaged flange heel might not seal at any extreme load condition, but the heel contact will be maintained for pressure values up to 1,5 times the flange pressure rating at room temperature for any combination of WN flange and a corresponding pipe within given limits of pipe wall thicknesses in tables of dimensions. This requirement is only applicable when the WN thickness fulfils the code requirement for minimum pipe wall thickness for the actual material. The main seal is the IX seal ring. The seal ring force is provided by the elastic stored energy in the stressed seal ring. Any heel leakage will give internal pressure acting on the seal ring inside intensifying the sealing action.

The design aims at preventing exposure to oxygen and other corrosive agents in the way that adjoining flanges remain in contact along their outer circumference for all allowable load levels. Thus, this prevents corrosion of the flange faces, the stressed length of the bolts and the seal ring.

The back face of the flange in the made-up position is parallel to the flange face in order to prevent bending of the bolts in the assembled condition.

© ISO 2020 – All rights reserved

Documents
Document Sharing Hub
Full document details: BS EN ISO 27509:2020

5.3 Assembly requirements

In order to conform with the design principles as described in 5.2, the flanged connections shall be assembled to target bolt loads in accordance with Table 1. See Annex D for detailed guidelines on how to assemble compact flanges.

Compact flange IX seal rings require sufficient flexibility to enable seal ring size entrance and removal. The required spacing shall be considered during piping design and layout to ensure necessary flexibility in the piping systems

The flange dimensions can be checked in accordance with the tolerances in Table 29. Note that the flange gap at D_{W3} defined by angle α_{B2} can change after the first assembly. This is because the flange angles are standardized and can be changed by plastic deformation to a more optimal value through shake down to elastic conditions, by the first assembly. Such local plastic deformations have no influence on further flange functionality and shall not be a reason for flange face re-machining request or flange rejection. See Annex D for further guidelines on evaluating flange dimensions in the field.

Table 1 — Target residual preload for bolt materials used to assemble compact flanges to this document

Stud bolt size in	Target residual preload kN
½-UNC	44
⅝-UNC	71
¾-UNC	106
⅞-UNC	147
1-UNC	193
1 ⅛-8UN	255
1 ¼-8UN	325
1 ⅜-8UN	405
1 ½-8UN	492
1 ⅝-8UN	589
1 ¾-8UN	693
1 ⅞-8UN	807
2-8UN	929
2 ¼-8UN	1 199
2 ½-8UN	1 503
2 ¾-8UN	1 667
3-8UN	2 004
3 ¼-8UN	2 373
3 ½-8UN	2 773
3 ¾-8UN	3 204
4-8UN	3 666
NOTE See Table F.1 for equivalent using the metric system.	

5.4 Standard components

The types of flanges covered by this document are given in Table 2.

© ISO 2020 – All rights reserved
Documents
Document Sharing Hub
Full document details: BS EN ISO 27509:2020

Table 2 — Types of flanges and accepted raw material forms for manufacture

Type	Description	Raw material product forms
WN	Weld neck flange	Forged to shape
BL	Blind flange	Plate or forged to shape
IF	Integral flange as part of some other equipment or component	Forging, forged bar (maximum DN 50) or casting
RI	Rigid interface as part of some other equipment or component	Plate, forging or casting
PB	Paddle blank	Plate or forged to shape
PS	Paddle spacer	Plate or forged to shape
OS	Orifice spacer	Plate or forged to shape
RT	Reducing threaded flange	Plate or forged to shape

5.5 Units of measurements

In this document, data are expressed in both SI units and USC units. For a specific order item, unless otherwise stated, only one system of units shall be used, without combining data expressed in the other system.

For data expressed in SI units, a comma is used as the decimal separator and a space is used as the thousands separator. For data expressed in USC units, a dot (on the line) is used as the decimal separator and a comma is used as the thousands separator.

5.6 Rounding

Except as otherwise required by this document, to determine conformance with the specified requirements, observed or calculated values shall be rounded to the nearest unit in the last right-hand place of figures used in expressing the limiting value, in accordance with the rounding method of ISO 80000-1:2009, Annex B, Rule A.

5.7 Conformance with piping design codes

Although not listed as a component standard in ASME B31.3, all components contained in this document fulfil the requirements for unlisted piping components in ASME B31.3. This is based on full conformance:

a) The service experience requirement is fulfilled because this type of CFC has been widely used in the North Sea since 1990. The service experience covers the complete size range covered by this document.

b) The experimental stress analysis requirements is fulfilled since a number of tests on strain gauged test specimens have been run over the years. Reference is made to References [40] to[43], [50], [51] and [52].

c) The proof test requirements are fulfilled since a number of pressure tests have been performed over the years. In addition to tests referenced under (b), reference is made to References [38], [44] and [45].

d) Compact flanges according to this document was originally developed and designed using the design by analysis method to pre 2007 issue of ASME VIII div.2, appendix 4 and appendix 6. Specific requirements may apply to components designed by analysis, depending on the applied piping design code. Such requirements normally include impact testing at a defined temperature relative to the minimum design temperature and a specified extent of non-destructive testing.

© ISO 2020 – All rights reserved

Documents
Document Sharing Hub
Full document details: BS EN ISO 27509:2020

5.8 Conformance with this document

The manufacturer shall be responsible for conforming with all of the applicable requirements of this document. It shall be permissible for the purchaser to make any investigation necessary in order to be assured of conformance by the manufacturer and to reject any material that does not conform.

6 Designation

6.1 Designation of flanges

The flanges shall be designated with the following information (based on guidance in EN 1092-1:2018, 4.2):

a) flange type abbreviation in accordance with Table 2;

b) reference of this document, i.e. ISO 27509;

c) nominal flange size (DN);

d) pressure class designation;

e) pipe dimensions:

— for standard pipes, the wall thickness in mm to one decimal accuracy;

— for non-standard pipes, the pipe bore and wall thickness.

f) material designation.

The designation elements shall be separated by a slash. The number of characters is not fixed.

Examples of designation are given below:

EXAMPLE 1 Designation of WN flange in CL 600, nominal size DN 250 with pipe schedule 40S, i.e. 9,3 mm wall thickness and material ASTM A182F51 (duplex):

WN/ISO 27509/DN250/CL600/9,3/A182F51

EXAMPLE 2 For designation of a BL flange in CL 2500, nominal size DN 200 and with material ASTM A516 Grade 70 (low temperature carbon steel):

BL/ISO 27509/DN200/CL2500/A516Grade70

EXAMPLE 3 Designation of an RT flange in CL900, nominal size DN 25, threaded outlet specified (0,5 inch NPT is default, see 9.9), and with material ASTM A182F316 (stainless steel):

RT/ISO 27509/DN25/CL900/0,5”NPT/A182F316

6.2 Designation of seal rings

The IX seal ring shall be designated as described below:

a) reference of this document, i.e. ISO 27509;

b) type - and ring size - IX and the appropriate DN;

c) material designation.

The designation elements shall be separated by “/” (slash). The number of characters is not fixed.

EXAMPLE Designation of an IX seal ring for DN 250 and material ASTM A182F51 (Duplex):

ISO 27509/IX250/A182F51

© ISO 2020 – All rights reserved
Documents
Document Sharing Hub
Full document details: BS EN ISO 27509:2020

7 Materials

7.1 General

Criteria for the selection of materials suitable for a particular fluid service are not part of this document.

7.2 Flange materials

Flanges covered by this document shall be made from base material product forms as listed in Table 2. The standardized bevel angle as described in 5.2 is applicable for steel and nickel alloys, which are covered in this document.

It is assumed that the flange material has a Young's modulus in the range 190 000 MPa to 210 000 MPa at room temperature. Minimum specified yield strength for flanges to this document is 205 MPa at room temperature. For flanges with H_{W3} > 150 mm, the minimum specified yield strength is 300 MPa.

The elliptical transition between flange ring and flange neck of WN flanges, and the corresponding crotch transition of IF flanges shall be subject to 100 % surface examination irrespective of flange material. Examination method and acceptance criteria shall be in accordance with standards referenced in the applied Piping Design Code.

Materials shall be ultrasonically tested in accordance with ASME VIII div. 2. This requirement is applicable to all flange components made from forgings, forged bars and plates.

Cast flanges shall be non-destructive tested to conform with casting factor used in calculations to determine performance. In general, cast flanges used as IF should be examined by 100 % surface and volumetric control in order to obtain a casting factor of 1,0, and thus obtaining the minimum pressure and temperature ratings stated in 8.2. Examination and acceptance criteria shall be agreed between purchaser and manufacturer, but sealing surfaces shall satisfy requirements in 9.12.

Test samples for certification testing required by the material standard, shall be taken from the flange ring transverse to the dominant grain flow direction, or alternatively in both axial (weld neck) and tangential (flange ring) direction relative to internal bore.

No repair welding is accepted in the elliptical transition for the WN flange (see Figure 2, and the indicated number "1") as well as in the crotch radius for the IF (see Figure 4, "R_{V1}") manufactured in line with this document.

7.3 Bolting materials

The minimum bolt yield strength at temperature shall be in accordance with Table 3. Linear interpolation can be used to calculate minimum yield strength for intermediate temperatures.

Table 3 — Minimum bolt yield strength as function of maximum design temperature, T_{des}

Bolt nominal diameter, d_B	T_{des} ≤ 20 °C	T_{des} = 50 °C	T_{des} = 100 °C	T_{des} = 150 °C	T_{des} = 200 °C	T_{des} = 250 °C
d ≤ 2 ½"	725 MPa	713 MPa	672 MPa	648 MPa	632 MPa	613 MPa
2 ½" < d ≤ 4"	655 MPa	645 MPa	607 MPa	586 MPa	569 MPa	555 MPa

Bolt pre-load requirements described in Table 1 are based upon these requirements and so are the flange face angles and groove dimensional details.

Nuts shall have sufficient strength to carry 100 % of the bolt capacity defined by the specified minimum yield strength as listed above, and the thread stress area. For imperial bolting, heavy hex nuts to ASME B18.2.2 shall be used. For metric bolting, heavy hex nuts to ASME B18.2.4.6M shall be used.

Thread tolerances shall be considered in the nut strength evaluation.

© ISO 2020 – All rights reserved

Documents
Document Sharing Hub
Full document details: BS EN ISO 27509:2020

Imperial or metric standard bolts threaded at both ends or full length may be used. Hex nuts with a minimum height equal to one nominal bolt diameter shall be used. The choice of bolt thread standard can affect assembly and bolt preloading procedures. Annex D is based on imperial bolting dimensions, while Annex F describes which metric bolts to choose for replacing the listed imperial bolts.

The effects of differential thermal expansion and bolt relaxation could affect the functionality of the joint up to loss of preload. Care shall be taken by selecting an appropriate bolt material for the above effects. Within the maximum temperature limits of this document, it is acceptable to use low alloy steel bolting in combination with austenitic stainless steel flange materials. In such applications, washers shall be applied under the nuts in order to avoid indenting the nut into the flange which would cause loss of pre-load.

Washers shall be in same or equivalent grade of material as the nuts and should be through hardened.

Relaxation is not regarded to be of any importance for this flange standard since the maximum design temperature is 250 °C. A margin of 5 % points was used on bolt pre-load when documenting the flange standard to the functionality requirements in Clause 5, meaning the FEAs were performed with 70 % bolt yield as pre-load over the 75 % specified as target residual pre-load in Table 1. The 5 % point reduction was applied to account for uncertainties in pre-loading procedures and any long-term relaxation.

Non-destructive examination of bolts and nuts shall be in accordance with ASME VIII div.2.

If super duplex bolting is used, the pre-loading method should be qualified to ensure that the average total residual pre-load is achieved. The procedure of Annex D.11 shall be followed. The particular requirement for super duplex bolting, is related to the possible high friction if torqued and the cold creep tendency of this material.

7.4 Seal ring materials

Typical minimum yield stress and ultimate tensile stress for the seal ring material shall at maximum design temperature be 300 MPa and 360 MPa, respectively, in order to allow for reasonably elastic spring-back.

The user is responsible for selecting a seal ring material which is suitable for the service medium and the design temperature conditions.

There is no requirement for Charpy impact testing of seal ring materials.

Seal rings shall be made of forged or worked material. For in service use, Table 4 gives a guideline for seal ring selection and temperature limitations.

© ISO 2020 – All rights reserved
Documents
Document Sharing Hub
Full document details: BS EN ISO 27509:2020

Table 4 — Seal ring selection

Flange material	Service temperature	Seal ring material	
			Typical manufacturing standard
Carbon steel and low alloy steel	–50 °C to +250 °C	Carbon steel or low alloy steels, e.g. CS360LT or AISI 4140	ASTM A788 or equivalent
Stainless steel	–50 °C to +250 °C	22Cr Duplex	ASTM A182 or equivalent
Stainless steel	–50 °C to +250 °C	17/4-PH	ASTM A705 or equivalent
Austenitic stainless steel and nickel alloys	–196 °C to +250 °C	Nickel alloys such as Alloy 625 or similar	ASTM B564 or equivalent

A lubricant is required on the seal ring to groove contact face in order to obtain low friction and to prevent galling when the seal ring is sliding down the tapered groove during assembly. See also 13 for coating and colour coding.

NOTE 1 For testing purposes at ambient temperature, a carbon steel ring can be used for all flange materials.

NOTE 2 The hardness difference requirement between seal ring and seat/groove for RTJ and BX rings in ASME and API flange assemblies is not applicable for the deformation controlled IX seal ring in this document. This is because the force transmitted through the IX seal is much smaller than for the load controlled RTJ type gasket. In an ASME flanged connection, all bolt forces are used to energize the gasket by plastic deformation. In a compact flanged connection to this document, only in the order of 5 % to 10 % of bolt pre-load is used to elastically deform the seal. Due to the low force transmitted, there are no possible issues with local deformations/dents in the groove. In fact, the hardness of the seal ring material will normally be higher than the hardness of the groove surface of the flange.

NOTE 3 Listed seal ring materials might be less resistant to corrosion than the stainless steel of the flanges, and this is justified by the low probability of corrosion due to the stressed contact between heel areas of the mating flanges, and due to the seal at the outer circumference of the flanges preventing ingress of water.

8 Strength, pressure/temperature ratings and leak tightness

8.1 General

CFCs shall generally have a level of structural safety that is comparable to that of the connecting pipe. CFCs shall be designed against the following possible modes of failure, as appropriate:

a) gross plastic deformation (excessive yielding);

b) leak tightness;

c) fatigue failure.

Furthermore, considerations shall be given to maximum and minimum assembly bolt preload and possible loss of bolt preload during operation due to combination of minimum assembly bolt load, pressure, external loads and thermal effects. Minimum assembly bolt load shall be determined based on assessment of accuracy of bolt preload method, short-term and long-term bolt relaxation.

Stresses resulting from bolt pre-loading shall be regarded as displacement stresses as defined in paragraph 319.2.3 of ASME B31.3:2018, during testing and operation.

8.2 Pressure/temperature ratings

Flanges covered by this document have been designated as one of the given classes in Table 5.

© ISO 2020 – All rights reserved

Documents
Document Sharing Hub
Full document details: BS EN ISO 27509:2020

Table 5 — Pressure class designation and ASME rating ceiling values at room temperature to ASME B16.5, Table A-1 and Table A-2

Pressure class		Class abbreviation	Nominal pressure		ASME pressure rating ceiling values[a]	
					psig	barg
Class	150	CL 150	PN	20	290	20,0
Class	300	CL 300	PN	50	750	51,7
Class	600	CL 600	PN	110	1 500	103,4
Class	900	CL 900	PN	150	2 250	155,1
Class	1500	CL 1500	PN	260	3 750	258,6
Class	2500	CL 2500	PN	420	6 250	430,9

[a] These values are applicable at room temperature and are for information only.

Flanged connections covered by a class in this document will exceed the maximum rating of the corresponding ASME B16.5 class and material within the temperature range as defined by this document. This corresponds to a utilization ratio of 0,5 in accordance with Annex A, which gives a method for determining the external load capacity for flanged connections.

For integral cast flanges also some design codes use the concept of "casting factors". The yield strength should in such cases be multiplied by the relevant casting factor before used in the capacity equations (see 7.2 regarding cast flanges).

Nominal design stress for bolts shall be determined by the same rule as used for nominal design stress of flanges and shells, e.g. same safety factor on yield stress. Bolt materials shall be selected with due consideration to creep and relaxation.

8.3 Pressure testing and leak tightness

Flanges are generally not required to be pressure tested until they are part of a piping system or pressure equipment, which shall be tested in accordance with design codes and requirements for such pressure equipment and piping. However, orifice spacers contained in this document, should undergo a hydrostatic pressure test before installation in order to verify appropriate quality of welded pressure tappings, see 9.8.

Flanged connections and flanged fittings may be subjected to system hydrostatic tests at a pressure of 1,5 times the 38 °C (100 °F) rating rounded off to the next higher 1 bar (25 psi) increment. Testing at any higher pressure is the responsibility of the user.

The maximum leakage for correctly assembled connections may be specified by the supplier, in accordance with EN 1779 and shall be expressed as leakage rate in units of gas throughput (Pa × m^3/s) for a specific gas, i.e. helium at room temperature and at maximum working pressure conditions. The circumferential length for this leakage shall also be specified. It is the responsibility of the supplier to verify that this leakage is not exceeded for the specified design conditions.

Default testing method shall be in accordance with EN 1779. The purchaser may specify other test methods.

9 Dimensions of flanges

9.1 General

A summary of the DNs applicable to each rating class is given in Table 6.

© ISO 2020 – All rights reserved
Documents
Document Sharing Hub
Full document details: BS EN ISO 27509:2020

Table 6 — Overview of sizes and rating class (CL)

DN	NPS	CL 150	CL 300	CL 600	CL 900	CL 1500	CL 2500
15	½	Equal to CL 300	–	Equal to CL 2500	Equal to CL 2500	Equal to CL 2500	–
20	¾		–				–
25	1		–				–
40	1 ½		–				–
50	2		–	Equal to CL1500	Equal to CL1500	–	–
65	2 ½		–			–	–
80	3		–	Equal to CL 900	–	–	–
100	4		–		–	–	–
125	5		–		–	–	–
150	6		–	–	–	–	–
200	8	–	–	–	–	–	–
250	10	–	–	–	–	–	–
300	12	–	–	–	–	–	–
350	14	–	–	–	–	–	–
400	16	–	–	–	–	–	–
450	18	–	–	–	–	–	–
500	20	–	–	–	–	–	–
550	22	–	–	–	–	–	–
600	24	–	–	–	–	–	–
650	26	–	–	–	–	–	
700	28	–	–	–	–	–	
750	30	–	–	–	–	–	
800	32	–	–	–	–	–	
850	34	–	–	–	–	–	
900	36	–	–	–	–	–	
950	38	–	–	–	–	–	
1000	40	–	–	–	–	–	
1050	42	–	–	–	–	–	
1100	44	–	–	–	–	–	
1150	46	–	–	–	–	–	
1200	48	–	–	–	–	–	

"Equal to CL xxxx" means that overall dimensions are equal for the referenced pressure classes. However, flange face bevel angles may be different

- (dash) indicates that there is an individual design for this size and class.

All bolt holes shall be equally spaced on the bolt circle diameter. Bolt holes on integral flanges shall straddle the horizontal or vertical lines (see Figure D.6).

Dimensions for all flange types in accordance with this document can be found in Table 7 to Table 28. Dimensional tolerances can be found in Table 29.

9.2 Weld neck dimensions

The minimum outside diameter of the WN flange is equal to the nominal outside diameter of the pipe. The maximum bore is equal to the specified nominal bore. This assures that the minimum WN thickness is equal to or larger than the wall thickness of the connected pipe.

© ISO 2020 – All rights reserved

Documents
Document Sharing Hub
Full document details: BS EN ISO 27509:2020

Details for the weld preparation for WN flanges are given in ASME B16.25. Other welding end preparations can be agreed between supplier and purchaser.

Dimensions of WN flanges are defined in Figure 2. Given variations of wall thickness of connected pipe (*t*) in Table 7 to Table 12 are in accordance with standard wall thicknesses in ASME B36.10M, ASME B36.19M and ISO 4200. WN flanges are neither designed for welding to rigid equipment nor to wall thicknesses above the pipe wall thickness range given in the tables below. Dimensions of IF in accordance with 9.4 should then be used, or WN flanges to a higher pressure class could be used. It is recommended to consider a lower pressure class WN flange if the selected pipe wall thickness is below the range specified for the original pressure class in Table 7 to Table 12.

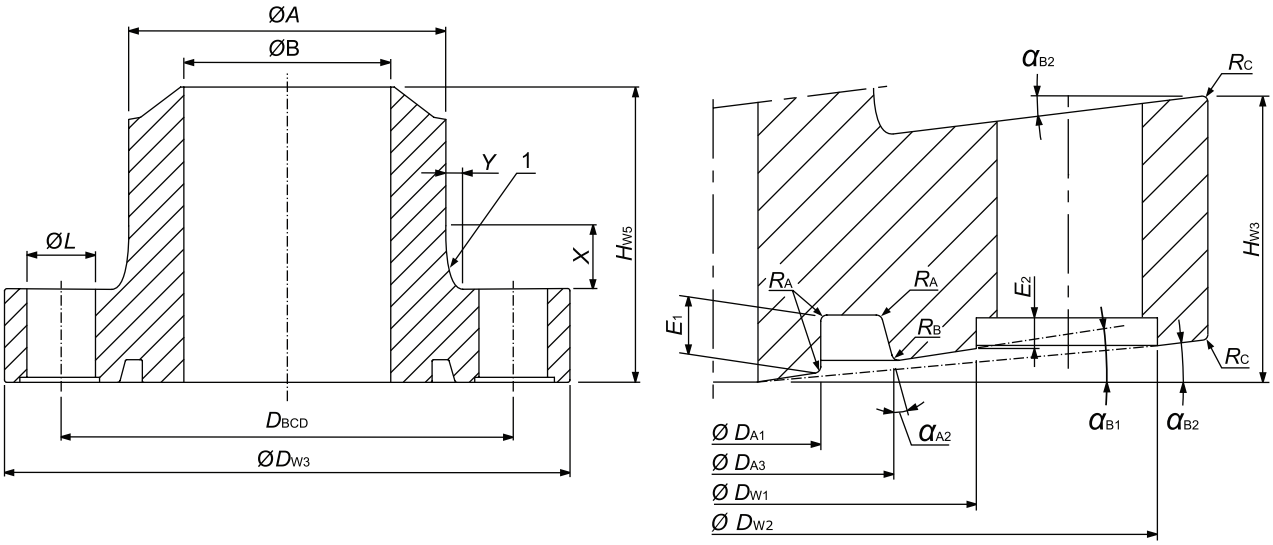

Key

1 elliptical transition

NOTE The back face of the flange is a tangential transition to the elliptical shape of the neck.

Figure 2 — Nomenclatures for weld neck (WN) flanges

© ISO 2020 – All rights reserved
Documents
Document Sharing Hub
Full document details: BS EN ISO 27509:2020

Table 7 — Dimensions of CL 150 weld neck (WN) flanges

DN	NPS	t	A	B	D_{W1}	D_{W2}	D_{W3}	B_{CD}	D_{A1}	D_{A3}	α_{A2}	E_1	E_2	α_{B1}	α_{B2}	H_{W3}	H_{W5}	X	Y	R_A	R_B	R_C	L	n	d_B
		mm	mm	mm	mm	mm	mm	mm	mm	mm	°	mm	mm	°	°	mm	mm	mm	mm	mm	mm	mm	mm		in
15	½	2,11-4,78	21,3	17,1-11,7	49,1	87,0	93,0	67,3	20,8	30,88	15,2	5,30	1,0	0,27	0,18	15,0	40,0	10,5	3,0	0,3	0,5	1,0	15,0	4	½
20	¾	2,11-5,56	26,7	22,5-15,6	54,4	92,0	98,0	72,7	25,8	35,88	15,2	5,30	1,0	0,30	0,20	15,0	40,0	10,5	3,0	0,3	0,5	1,0	15,0	4	½
25	1	2,77-6,35	33,4	27,9-20,7	61,2	99,0	105,0	79,4	32,8	42,87	15,2	5,30	1,0	0,32	0,22	15,0	40,0	10,5	3,0	0,3	0,5	1,0	15,0	4	½
40	1½	2,77-5,08	48,3	42,8-38,1	76,0	114,0	120,0	94,3	47,8	58,88	15,3	5,58	1,0	0,41	0,27	15,0	41,0	10,5	3,0	0,3	0,5	1,0	15,0	4	½
50	2	2,77-5,54	60,3	54,8-49,2	88,1	126,0	132,0	106,3	59,8	71,88	15,3	6,19	1,0	0,45	0,30	15,0	42,0	10,5	3,0	0,4	0,6	1,0	15,0	4	½
65	2½	3,05-5,16	73,0	66,9-62,7	100,8	139,0	145,0	119,0	72,8	85,86	15,3	6,79	1,0	0,41	0,27	16,0	43,0	10,5	3,0	0,4	0,6	1,0	15,0	4	½
80	3	3,05-5,49	88,9	82,8-77,9	116,7	155,0	161,0	134,9	87,8	101,96	15,6	7,42	1,0	0,88	0,59	18,0	46,0	10,5	3,0	0,4	0,7	1,0	15,0	8	½
100	4	3,05-6,02	114,3	108,2-102,3	141,7	180,0	186,0	160,3	113,8	129,91	15,4	8,40	1,0	0,59	0,40	22,0	51,0	10,5	3,0	0,5	0,8	1,0	15,0	8	½
125	5	3,40-6,55	141,3	134,5-128,2	168,7	207,0	213,0	187,3	139,8	157,90	15,5	9,27	1,0	0,76	0,50	25,0	55,0	10,5	3,0	0,5	0,9	1,0	15,0	12	½
150	6	3,40-7,11	168,3	161,5-154,1	195,7	234,0	240,0	214,3	167,7	187,86	15,4	10,12	1,0	0,62	0,41	28,0	60,0	10,5	3,0	0,6	1,0	1,0	15,0	12	½
200	8	3,76-6,35	219,1	211,6-206,4	249,4	288,0	294,0	268,1	217,7	239,91	15,6	11,48	1,0	0,94	0,63	26,0	53,0	10,5	3,0	0,7	1,1	1,5	15,0	12	½
250	10	4,19-6,35	273,1	264,7-260,4	310,6	349,0	355,0	329,3	271,7	299,92	15,6	12,90	1,0	0,93	0,62	32,0	60,0	10,5	3,0	0,8	1,3	1,5	15,0	16	½
300	12	4,57-6,35	323,9	314,8-311,2	358,1	397,0	403,0	376,7	321,7	348,95	15,7	13,97	1,0	1,01	0,67	35,0	64,0	10,5	3,0	0,8	1,4	1,5	15,0	20	½
350	14	4,78-7,92	355,6	346,0-339,8	392,3	431,0	437,0	411,5	353,7	381,89	15,6	14,63	1,0	0,85	0,57	38,0	67,0	10,5	3,0	0,8	1,4	1,5	15,0	20	½
400	16	4,78-7,92	406,4	396,8-390,6	451,2	497,0	505,0	473,4	405,7	436,06	15,8	15,63	1,0	1,20	0,80	42,0	73,0	10,5	3,0	0,9	1,5	2,0	18,0	20	⅝
450	18	4,78-7,92	457,2	447,6-441,4	498,7	545,0	552,0	520,9	455,7	487,97	15,7	16,54	1,0	1,01	0,67	46,0	77,0	10,5	3,0	1,0	1,6	2,0	18,0	20	⅝
500	20	5,54-9,53	508,0	496,9-488,9	552,5	599,0	606,0	574,7	507,7	540,99	15,7	17,63	1,0	1,02	0,68	50,0	82,0	10,5	3,0	1,0	1,7	2,0	18,0	24	⅝
550	22	5,54-9,53	558,8	547,7-539,7	606,9	653,0	661,0	629,1	557,7	593,03	15,7	18,45	1,0	1,08	0,72	54,0	87,0	10,5	3,0	1,1	1,8	2,0	18,0	28	⅝
600	24	6,35-9,53	609,6	596,9-590,5	666,3	722,0	730,0	693,0	607,7	644,13	15,8	19,23	1,0	1,19	0,79	59,0	93,0	10,5	3,0	1,1	1,9	3,0	22,0	24	¾
650	26	7,92-9,53	660,4	644,6-641,3	720,2	776,0	784,0	746,8	659,5	696,97	15,7	20,00	1,0	1,00	0,67	64,0	98,0	10,5	3,0	1,1	1,9	3,0	22,0	24	¾
700	28	7,92-9,53	711,2	695,4-692,1	774,5	830,0	839,0	801,2	709,5	749,04	15,7	20,92	1,0	1,08	0,72	68,0	103,0	10,5	3,0	1,2	2,0	3,0	22,0	28	¾
750	30	7,92-12,70	762,0	746,2-736,6	828,9	884,0	893,0	855,5	761,5	802,05	15,7	21,65	1,0	1,08	0,72	72,0	108,0	10,9	3,1	1,3	2,1	3,0	22,0	32	¾
800	32	7,92-12,70	812,8	797,0-787,4	881,3	937,0	945,0	908,0	811,5	853,02	15,7	22,32	1,0	1,03	0,69	76,0	113,0	11,3	3,2	1,3	2,2	3,0	22,0	36	¾
850	34	7,92-12,70	863,6	847,8-838,2	933,9	989,0	998,0	960,5	861,5	904,16	15,8	22,97	1,0	1,18	0,79	79,0	118,0	11,8	3,4	1,3	2,2	3,0	22,0	40	¾
900	36	7,92-12,70	914,4	898,6-889,0	986,1	1 050,0	1 059,0	1 016,6	913,5	958,16	15,8	23,82	1,0	1,15	0,77	84,0	123,0	12,3	3,5	1,4	2,3	3,0	25,0	32	⅞
950	38	9,53-12,70	965,2	946,1-939,8	1 041,2	1 105,0	1 114,0	1 071,6	963,5	1 009,22	15,8	24,44	1,0	1,20	0,80	88,0	128,0	12,7	3,6	1,4	2,3	3,0	25,0	36	⅞
1000	40	9,53-12,70	1 016,0	996,9-990,6	1 098,7	1 162,0	1 172,0	1 129,2	1 015,5	1 062,30	15,8	25,06	1,0	1,26	0,84	92,0	133,0	13,2	3,8	1,4	2,4	3,0	25,0	40	⅞
1050	42	9,53-12,70	1 066,8	1 047,7-1 041,4	1 145,8	1 209,0	1 219,0	1 176,2	1 065,5	1 113,36	15,9	25,65	1,0	1,31	0,87	95,0	137,0	13,8	3,9	1,5	2,5	3,0	25,0	44	⅞
1100	44	9,53-12,70	1 117,6	1 098,5-1 092,2	1 197,8	1 261,0	1 271,0	1 228,3	1 115,5	1 164,28	15,8	26,42	1,0	1,22	0,81	99,0	141,0	14,2	4,1	1,5	2,5	3,0	25,0	44	⅞
1150	46	9,53-12,70	1 168,4	1 149,3-1 143,0	1 249,9	1 313,0	1 323,0	1 280,3	1 167,5	1 217,35	15,9	27,00	1,0	1,28	0,85	102,0	146,0	14,7	4,2	1,6	2,6	3,0	25,0	48	⅞
1200	48	9,53-12,70	1 219,2	1 200,1-1 193,8	1 302,4	1 366,0	1 376,0	1 332,9	1 217,5	1 268,39	15,9	27,54	1,0	1,30	0,87	106,0	150,0	15,2	4,3	1,6	2,6	3,0	25,0	52	⅞

© ISO 2020 – All rights reserved

Full document details: BS EN ISO 27509:2020
AVA Documents Document Sharing Hub

Table 8 — Dimensions of CL 300 weld neck (WN) flanges

DN	NPS	t	A	B	D_{W1}	D_{W2}	D_{W3}	B_{CD}	D_{A1}	D_{A3}	α_{A2}	E_1	E_2	α_{B1}	α_{B2}	H_{W3}	H_{W5}	X	Y	R_A	R_B	R_C	L	n	d_B
		mm	mm	mm	mm	mm	mm	mm	mm	mm	°	mm	mm	°	°	mm	mm	mm	mm	mm	mm	mm	mm		in
15	½	2,11-4,78	21,3	17,1-11,7	49,1	87,0	93,0	67,3	20,8	30,88	15,2	5,30	1,0	0,27	0,18	15,0	40,0	10,5	3,0	0,3	0,5	1,0	15,0	4	½
20	¾	2,11-5,56	26,7	22,5-15,6	54,4	92,0	98,0	72,7	25,8	35,88	15,2	5,30	1,0	0,30	0,20	15,0	40,0	10,5	3,0	0,3	0,5	1,0	15,0	4	½
25	1	2,77-6,35	33,4	27,9-20,7	61,2	99,0	105,0	79,4	32,8	42,87	15,2	5,30	1,0	0,32	0,22	15,0	40,0	10,5	3,0	0,3	0,5	1,0	15,0	4	½
40	1½	2,77-5,08	48,3	42,8-38,1	76,0	114,0	120,0	94,3	47,8	58,88	15,3	5,58	1,0	0,41	0,27	15,0	41,0	10,5	3,0	0,3	0,5	1,0	15,0	4	½
50	2	2,77-5,54	60,3	54,8-49,2	88,1	126,0	132,0	106,3	59,8	71,88	15,3	6,19	1,0	0,45	0,30	15,0	42,0	10,5	3,0	0,4	0,6	1,0	15,0	4	½
65	2½	3,05-5,16	73,0	66,9-62,7	100,8	139,0	145,0	119,0	72,8	85,86	15,3	6,79	1,0	0,41	0,27	16,0	43,0	10,5	3,0	0,4	0,6	1,0	15,0	4	½
80	3	3,05-5,49	88,9	82,8-77,9	116,7	155,0	161,0	134,9	87,8	101,96	15,6	7,42	1,0	0,88	0,59	18,0	46,0	10,5	3,0	0,4	0,7	1,0	15,0	8	½
100	4	3,05-6,02	114,3	108,2-102,3	141,7	180,0	186,0	160,3	113,8	129,91	15,4	8,40	1,0	0,59	0,40	22,0	51,0	10,5	3,0	0,5	0,8	1,0	15,0	8	½
125	5	3,40-6,55	141,3	134,5-128,2	168,7	207,0	213,0	187,3	139,8	157,90	15,5	9,27	1,0	0,76	0,50	25,0	55,0	10,5	3,0	0,5	0,9	1,0	15,0	12	½
150	6	3,40-7,11	168,3	161,5-154,1	195,7	234,0	240,0	214,3	167,7	187,86	15,4	10,12	1,0	0,62	0,41	28,0	60,0	10,5	3,0	0,6	1,0	1,0	15,0	12	½
200	8	3,76-8,18	219,1	211,6-202,7	252,9	299,0	306,0	274,6	217,7	239,89	15,4	11,48	1,0	0,66	0,44	35,0	69,0	10,5	3,0	0,7	1,1	1,5	18,0	12	⅝
250	10	4,19-9,27	273,1	264,7-254,6	307,8	353,0	361,0	329,4	271,7	299,97	15,5	12,90	1,0	0,80	0,54	42,0	78,0	10,5	3,0	0,8	1,3	1,5	18,0	20	⅝
300	12	4,57-10,31	323,9	314,8-303,3	361,6	407,0	415,0	383,2	321,7	348,91	15,4	13,97	1,0	0,67	0,45	47,0	85,0	11,4	3,3	0,8	1,4	1,5	18,0	20	⅝
350	14	4,78-11,13	355,6	346,0-333,3	395,8	442,0	450,0	418,0	353,7	381,94	15,5	14,63	1,0	0,74	0,49	50,0	90,0	12,3	3,5	0,8	1,4	1,5	18,0	24	⅝
400	16	4,78-12,70	406,4	396,8-381,0	455,8	511,0	519,0	482,4	405,7	436,04	15,6	15,63	1,0	0,84	0,56	58,0	100,0	13,5	3,9	0,9	1,5	2,0	22,0	24	¾
450	18	6,35-14,27	457,2	444,5-428,7	503,3	559,0	567,0	529,9	455,7	488,03	15,5	16,54	1,0	0,81	0,54	63,0	107,0	14,7	4,2	1,0	1,6	2,0	22,0	28	¾
500	20	6,35-15,09	508,0	495,3-477,8	558,1	621,0	631,0	587,7	507,7	541,04	15,5	17,63	1,0	0,81	0,54	69,0	116,0	16,0	4,6	1,0	1,7	2,0	25,0	24	⅞
550	22	9,53-22,23	558,8	539,7-514,3	612,5	675,0	685,0	642,1	557,7	593,00	15,5	18,45	1,0	0,75	0,50	74,0	121,0	17,3	4,9	1,1	1,8	2,0	25,0	28	⅞
600	24	9,53-17,48	609,6	590,5-574,6	668,3	740,0	750,0	702,0	607,7	644,18	15,6	19,23	1,5	0,91	0,61	81,0	128,0	18,4	5,3	1,1	1,9	3,0	29,0	28	1
650	26	7,92-16,00	660,4	644,6-628,4	722,2	794,0	804,0	755,8	659,5	697,22	15,7	20,00	1,5	0,99	0,66	86,0	134,0	19,7	5,6	1,1	1,9	3,0	29,0	32	1
700	28	7,92-15,88	711,2	695,4-679,4	776,5	848,0	859,0	810,2	709,5	749,16	15,6	20,92	1,5	0,92	0,61	91,0	140,0	21,0	6,0	1,2	2,0	3,0	29,0	32	1
750	30	7,92-17,50	762,0	746,2-727,0	837,9	917,0	928,0	874,5	761,5	802,35	15,7	21,65	1,5	1,06	0,71	98,0	147,0	22,2	6,3	1,3	2,1	3,0	32,0	32	1⅛
800	32	9,53-17,48	812,8	793,7-777,8	890,3	969,0	981,0	927,0	811,5	853,26	15,6	22,32	1,5	0,97	0,64	103,0	152,0	23,5	6,7	1,3	2,2	3,0	32,0	32	1⅛
850	34	9,53-20,00	863,6	844,5-823,6	945,9	1 032,0	1 045,0	985,5	861,5	904,45	15,7	22,97	1,5	1,09	0,72	109,0	159,0	24,7	7,1	1,3	2,2	3,0	35,0	32	1¼
900	36	9,53-22,20	914,4	895,3-870,0	997,1	1 084,0	1 097,0	1 037,6	913,5	958,34	15,7	23,82	1,5	0,99	0,66	114,0	164,0	25,9	7,4	1,4	2,3	3,0	35,0	32	1¼
950	38	12,70-20,00	965,2	939,8-925,2	1 052,2	1 139,0	1 152,0	1 092,6	963,5	1 009,45	15,7	24,44	1,5	1,05	0,70	119,0	170,0	27,2	7,8	1,4	2,3	3,0	35,0	36	1¼
1000	40	12,70-22,20	1 016,0	990,6-971,6	1 109,7	1 196,0	1 210,0	1 150,2	1 015,5	1 062,48	15,7	25,06	1,5	1,05	0,70	126,0	177,0	28,5	8,1	1,4	2,4	3,0	35,0	40	1¼
1050	42	12,70-22,20	1 066,8	1 041,4-1 022,4	1 162,8	1 257,0	1 271,0	1 206,2	1 065,5	1 113,57	15,7	25,65	1,5	1,09	0,73	131,0	184,0	29,6	8,5	1,5	2,5	3,0	38,0	36	1⅜
1100	44	12,70-25,00	1 117,6	1 092,2-1 067,6	1 214,8	1 309,0	1 323,0	1 258,3	1 115,5	1 164,66	15,8	26,42	1,5	1,14	0,76	135,0	190,0	30,9	8,8	1,5	2,5	3,0	38,0	40	1⅜
1150	46	12,70-25,0	1 168,4	1 143,0-1 118,4	1 266,9	1 370,0	1 385,0	1 314,3	1 167,5	1 217,68	15,7	27,00	1,5	1,12	0,74	142,0	198,0	32,2	9,2	1,6	2,6	3,0	42,0	36	1½
1200	48	12,70-25,0	1 219,2	1 193,8-1 169,2	1 319,4	1 422,0	1 437,0	1 366,9	1 217,5	1 268,63	15,7	27,54	1,5	1,08	0,72	146,0	204,0	33,5	9,6	1,6	2,6	3,0	42,0	36	1½

© ISO 2020 – All rights reserved

Document details: BS EN ISO 27509:2020

AVA Documents Document Sharing Hub

Table 9 — Dimensions of CL 600 weld neck (WN) flanges

DN	NPS	t	A	B	D_{W1}	D_{W2}	D_{W3}	B_{CD}	D_{A1}	D_{A3}	α_{A2}	E_1	E_2	α_{B1}	α_{B2}	H_{W3}	H_{W5}	X	Y	R_A	R_B	R_C	L	n	d_B
		mm	mm	mm	mm	mm	mm	mm	mm	mm	°	mm	mm	°	°	mm	mm	mm	mm	mm	mm	mm	mm		in
15	½	2,77-4,78	21,3	15,8-11,7	49,1	87,0	93,0	67,3	20,8	30,86	15,1	5,30	1,0	0,15	0,10	20,0	51,0	10,5	3,0	0,3	0,5	1,0	15,0	4	½
20	¾	2,87-5,56	26,7	21,0-15,6	54,4	92,0	98,0	72,7	25,8	35,86	15,1	5,30	1,0	0,15	0,10	20,0	53,0	10,5	3,0	0,3	0,5	1,0	15,0	4	½
25	1	2,77-6,35	33,4	27,9-20,7	61,2	99,0	105,0	79,4	32,8	42,85	15,1	5,30	1,0	0,15	0,10	20,0	56,0	10,5	3,0	0,3	0,5	1,0	15,0	4	½
40	1½	2,77-7,14	48,3	42,8-34,0	77,1	115,0	121,0	95,3	47,8	58,88	15,2	5,58	1,0	0,29	0,19	23,0	64,0	12,4	3,5	0,3	0,5	1,0	15,0	8	½
50	2	2,77-8,74	60,3	54,8-42,8	91,7	130,0	136,0	110,0	59,8	71,89	15,2	6,19	1,0	0,33	0,22	23,0	60,0	10,5	3,0	0,4	0,6	1,0	15,0	8	½
65	2½	3,05-7,01	73,0	66,9-59,0	104,8	143,0	149,0	123,1	72,8	85,92	15,3	6,79	1,0	0,44	0,29	26,0	66,0	12,0	3,4	0,4	0,6	1,0	15,0	12	½
80	3	3,05-7,62	88,9	82,8-73,7	116,7	155,0	161,0	134,9	87,8	101,93	15,4	7,42	1,0	0,53	0,35	25,0	61,0	10,5	3,0	0,4	0,7	1,0	15,0	12	½
100	4	3,05-8,56	114,3	108,2-97,2	150,0	196,0	203,0	171,7	113,8	129,97	15,4	8,40	1,0	0,59	0,39	31,0	70,0	11,7	3,3	0,5	0,8	1,0	18,0	12	⅝
125	5	3,40-9,53	141,3	134,5-122,2	177,0	223,0	230,0	198,6	139,8	157,88	15,3	9,27	1,0	0,48	0,32	35,0	78,0	13,7	3,9	0,5	0,9	1,0	18,0	12	⅝
150	6	7,11-10,97	168,3	154,1-146,4	205,2	251,0	258,0	226,8	167,7	187,85	15,3	10,12	1,0	0,46	0,31	36,0	75,0	11,7	3,3	0,6	1,0	1,0	18,0	12	⅝
200	8	6,35-12,70	219,1	206,4-193,7	258,7	304,0	312,0	280,4	217,7	239,92	15,4	11,48	1,0	0,60	0,40	43,0	87,0	14,1	4,0	0,7	1,1	1,5	18,0	20	⅝
250	10	6,35-15,09	273,1	260,4-242,9	318,7	374,0	382,0	344,8	271,7	299,95	15,4	12,90	1,0	0,61	0,40	53,0	102,0	16,7	4,8	0,8	1,3	1,5	22,0	20	¾
300	12	8,38-17,48	323,9	307,1-288,9	378,0	441,0	450,0	407,7	321,7	349,01	15,5	13,97	1,0	0,68	0,45	60,0	108,0	19,1	5,5	0,8	1,4	1,5	25,0	20	⅞
350	14	7,92-19,05	355,6	339,8-317,5	409,5	472,0	482,0	439,2	353,7	382,05	15,5	14,63	1,0	0,72	0,48	64,0	113,0	20,7	5,9	0,8	1,4	1,5	25,0	24	⅞
400	16	9,53-21,44	406,4	387,3-363,5	465,4	537,0	547,0	499,0	405,7	436,09	15,5	15,63	1,5	0,72	0,48	73,0	122,0	23,2	6,6	0,9	1,5	2,0	29,0	24	1
450	18	9,53-23,83	457,2	438,1-409,5	523,4	602,0	614,0	560,1	455,7	488,19	15,5	16,54	1,5	0,81	0,54	80,0	131,0	25,7	7,3	1,0	1,6	2,0	32,0	24	1⅛
500	20	12,70-26,19	508,0	482,6-455,6	574,0	653,0	664,0	610,6	507,7	541,20	15,5	17,63	1,5	0,81	0,54	86,0	139,0	28,1	8,0	1,0	1,7	2,0	32,0	28	1⅛
550	22	12,70-28,58	558,8	533,4-501,6	631,1	717,0	730,0	670,7	557,7	593,17	15,5	18,45	1,5	0,75	0,50	94,0	149,0	30,6	8,7	1,1	1,8	2,0	35,0	24	1¼
600	24	12,70-30,96	609,6	584,2-547,7	685,9	772,0	785,0	725,6	607,7	644,23	15,5	19,23	1,5	0,79	0,52	100,0	158,0	33,0	9,4	1,1	1,9	3,0	35,0	28	1¼
650	26	14,2-28,00	660,4	632,0-604,4	736,0	822,0	835,0	775,6	659,5	697,27	15,6	20,00	1,5	0,85	0,57	105,0	166,0	35,5	10,1	1,1	1,9	3,0	35,0	32	1¼
700	28	15,88-28,00	711,2	679,4-655,2	792,5	886,0	900,0	835,2	709,5	749,42	15,6	20,92	1,5	0,95	0,63	112,0	176,0	37,9	10,8	1,2	2,0	3,0	38,0	32	1⅜
750	30	15,88-30,00	762,0	730,2-702,0	847,1	940,0	955,0	889,8	761,5	802,49	15,7	21,65	1,5	0,98	0,65	118,0	185,0	40,4	11,5	1,3	2,1	3,0	38,0	36	1⅜
800	32	17,48-30,00	812,8	777,8-752,8	899,0	1 001,0	1 016,0	945,7	811,5	853,46	15,6	22,32	1,5	0,92	0,62	126,0	195,0	42,8	12,2	1,3	2,2	3,0	42,0	32	1½
850	34	17,48-32,00	863,6	828,6-799,6	954,3	1 064,0	1 081,0	1 004,8	861,5	904,61	15,7	22,97	1,5	1,00	0,67	133,0	205,0	45,3	12,9	1,3	2,2	3,0	45,0	32	1⅝
900	36	19,05-36,00	914,4	876,3-842,4	1 007,9	1 118,0	1 134,0	1 058,4	913,5	958,39	15,5	23,82	1,5	0,81	0,54	145,0	214,0	47,3	13,5	1,4	2,3	3,0	45,0	32	1⅝
950	38	20,00-36,00	965,2	925,2-893,2	1 060,5	1 179,0	1 196,0	1 115,0	963,5	1 009,62	15,6	24,44	1,5	0,95	0,64	147,0	223,0	49,0	14,0	1,4	2,3	3,0	49,0	32	1¾
1000	40	20,00-40,00	1 016,0	976,0-936,0	1 115,1	1 234,0	1 251,0	1 169,6	1 015,5	1 062,71	15,7	25,06	1,5	0,99	0,66	153,0	232,0	50,8	14,5	1,4	2,4	3,0	49,0	36	1¾
1050	42	22,20-40,00	1 066,8	1 022,4-986,8	1 167,7	1 294,0	1 312,0	1 225,2	1 065,5	1 113,56	15,6	25,65	1,5	0,86	0,57	165,0	241,0	52,5	15,0	1,5	2,5	3,0	52,0	32	1⅞
1100	44	22,20-45,00	1 117,6	1 073,2-1 027,6	1 221,0	1 347,0	1 365,0	1 278,5	1 115,5	1 164,67	15,6	26,42	1,5	0,91	0,60	170,0	249,0	54,3	15,5	1,5	2,5	3,0	52,0	36	1⅞
1150	46	22,20-45,00	1 168,4	1 124,0-1 078,4	1 285,4	1 419,0	1 438,0	1 345,9	1 167,5	1 217,95	15,7	27,00	2,0	1,05	0,70	174,0	262,0	56,0	16,0	1,6	2,6	3,0	55,0	36	2
1200	48	25,0-45,00	1 219,2	1 169,2-1 129,2	1 337,0	1 470,0	1 490,0	1 397,4	1 217,5	1 268,69	15,6	27,54	2,0	0,86	0,57	189,0	270,0	57,8	16,5	1,6	2,6	3,0	55,0	36	2

© ISO 2020 – All rights reserved

Full document details: BS EN ISO 27509:2020
AVA Documents Document Sharing Hub

Table 10 — Dimensions of CL 900 weld neck (WN) flanges

DN	NPS	t	A	B	D_{W1}	D_{W2}	D_{W3}	B_{CD}	D_{A1}	D_{A3}	α_{A2}	E_1	E_2	α_{B1}	α_{B2}	H_{W3}	H_{W5}	X	Y	R_A	R_B	R_C	L	n	d_B
		mm	mm	mm	mm	mm	mm	mm	mm	mm	°	mm	mm	°	°	mm	mm	mm	mm	mm	mm	mm	mm		in
15	½	2,77-4,78	21,3	15,8-11,7	49,1	87,0	93,0	67,3	20,8	30,86	15,1	5,30	1,0	0,15	0,10	20,0	51,0	10,5	3,0	0,3	0,5	1,0	15,0	4	½
20	¾	2,87-5,56	26,7	21,0-15,6	54,4	92,0	98,0	72,7	25,8	35,86	15,1	5,30	1,0	0,15	0,10	20,0	53,0	10,5	3,0	0,3	0,5	1,0	15,0	4	½
25	1	3,38-6,35	33,4	26,6-20,7	61,2	99,0	105,0	79,4	32,8	42,85	15,1	5,30	1,0	0,15	0,10	20,0	56,0	10,5	3,0	0,3	0,5	1,0	15,0	4	½
40	1½	2,77-7,14	48,3	42,8-34,0	77,1	115,0	121,0	95,3	47,8	58,88	15,2	5,58	1,0	0,29	0,19	23,0	64,0	12,4	3,5	0,3	0,5	1,0	15,0	8	½
50	2	2,77-8,74	60,3	54,8-42,8	91,7	130,0	136,0	110,0	59,8	71,89	15,2	6,19	1,0	0,33	0,22	23,0	60,0	10,5	3,0	0,4	0,6	1,0	15,0	8	½
65	2½	3,05-9,53	73,0	66,9-53,9	104,8	143,0	149,0	123,1	72,8	85,91	15,3	6,79	1,0	0,41	0,28	26,0	66,0	12,0	3,4	0,4	0,6	1,0	15,0	12	½
80	3	3,05-11,13	88,9	82,8-66,6	116,7	155,0	161,0	134,9	87,8	101,91	15,3	7,42	1,0	0,48	0,32	25,0	61,0	10,5	3,0	0,4	0,7	1,0	15,0	12	½
100	4	3,05-11,13	114,3	108,2-92,0	150,0	196,0	203,0	171,7	113,8	129,96	15,4	8,40	1,0	0,56	0,37	31,0	70,0	11,7	3,3	0,5	0,8	1,0	18,0	12	⅝
125	5	6,55-12,70	141,3	128,2-115,9	177,0	223,0	230,0	198,6	139,8	157,86	15,3	9,27	1,0	0,43	0,29	35,0	78,0	13,7	3,9	0,5	0,9	1,0	18,0	12	⅝
150	6	7,11-14,27	168,3	154,1-139,8	210,0	256,0	263,0	231,6	167,7	187,88	15,3	10,12	1,0	0,47	0,31	40,0	87,0	15,5	4,4	0,6	1,0	1,0	18,0	16	⅝
200	8	6,35-18,26	219,1	206,4-182,6	267,2	322,0	330,0	293,2	217,7	239,96	15,4	11,48	1,0	0,58	0,39	50,0	98,0	19,1	5,5	0,7	1,1	1,5	22,0	20	¾
250	10	7,80-21,44	273,1	257,5-230,2	325,8	388,0	397,0	354,8	271,7	299,97	15,4	12,90	1,0	0,56	0,38	60,0	110,0	23,1	6,6	0,8	1,3	1,5	25,0	20	⅞
300	12	8,38-25,4	323,9	307,1-273,1	380,3	452,0	462,0	413,9	321,7	349,00	15,4	13,97	1,5	0,58	0,39	68,0	119,0	26,7	7,6	0,8	1,4	1,5	29,0	20	1
350	14	9,53-27,79	355,6	336,5-300,0	415,6	487,0	497,0	449,3	353,7	382,03	15,4	14,63	1,5	0,61	0,41	73,0	127,0	28,9	8,3	0,8	1,4	1,5	29,0	24	1
400	16	12,70-30,96	406,4	381,0-344,5	477,2	556,0	567,0	513,8	405,7	436,09	15,4	15,63	1,5	0,65	0,43	82,0	140,0	32,6	9,3	0,9	1,5	2,0	32,0	24	1⅛
450	18	11,13-29,36	457,2	434,9-398,5	534,3	620,0	633,0	574,0	455,7	488,21	15,5	16,54	1,5	0,74	0,49	90,0	153,0	36,3	10,4	1,0	1,6	2,0	35,0	24	1¼
500	20	12,70-32,54	508,0	482,6-442,9	592,9	686,0	700,0	635,5	507,7	541,27	15,5	17,63	1,5	0,76	0,51	99,0	166,0	39,9	11,4	1,0	1,7	2,0	38,0	24	1⅜
550	22	22,23-34,93	558,8	514,3-488,9	647,0	749,0	764,0	693,6	557,7	593,28	15,5	18,45	1,5	0,75	0,50	107,0	179,0	43,5	12,4	1,1	1,8	2,0	42,0	24	1½
600	24	14,27-38,89	609,6	581,1-531,8	704,6	814,0	830,0	754,2	607,7	644,42	15,5	19,23	1,5	0,82	0,55	115,0	191,0	47,1	13,5	1,1	1,9	3,0	45,0	24	1⅝
650	26	20,00-36,0	660,4	620,4-588,4	759,2	877,0	894,0	812,8	659,5	697,44	15,6	20,00	1,5	0,84	0,56	124,0	204,0	50,8	14,5	1,1	1,9	3,0	49,0	24	1¾
700	28	22,20-40,00	711,2	666,8-631,2	812,8	931,0	948,0	866,4	709,5	749,20	15,4	20,92	1,5	0,62	0,41	141,0	214,0	52,5	15,0	1,2	2,0	3,0	49,0	24	1¾
750	30	17,50-45,00	762,0	727,0-672,0	870,2	995,0	1 014,0	926,9	761,5	802,29	15,4	21,65	1,5	0,66	0,44	149,0	227,0	56,0	16,0	1,3	2,1	3,0	52,0	24	1⅞
800	32	25,00-45,00	812,8	762,8-722,8	928,8	1 061,0	1 081,0	988,4	811,5	853,35	15,5	22,32	2,0	0,68	0,45	157,0	239,0	59,5	17,0	1,3	2,2	3,0	55,0	24	2
850	34	25,00-50,00	863,6	813,6-763,6	989,0	1 139,0	1 160,0	1 057,1	861,5	904,71	15,6	22,97	2,0	0,89	0,60	158,0	254,0	63,0	18,0	1,3	2,2	3,0	62,0	24	2¼
900	36	22,20-50,00	914,4	870,0-814,4	1 042,7	1 193,0	1 214,0	1 110,7	913,5	958,50	15,5	23,82	2,0	0,72	0,48	176,0	265,0	64,8	18,5	1,4	2,3	3,0	62,0	24	2¼
950	38	30,00-55,00	965,2	905,2-855,2	1 102,8	1 267,0	1 291,0	1 176,8	963,5	1 009,85	15,6	24,44	2,0	0,92	0,61	174,0	279,0	66,5	19,0	1,4	2,3	3,0	68,0	24	2½
1000	40	30,00-55,00	1 016,0	956,0-906,0	1 155,9	1 320,0	1 344,0	1 230,0	1 015,5	1 062,64	15,5	25,06	2,0	0,77	0,51	190,0	290,0	68,3	19,5	1,4	2,4	3,0	68,0	24	2½
1050	42	25,00-60,00	1 066,8	1 016,8-946,8	1 208,1	1 372,0	1 396,0	1 282,1	1 065,5	1 113,93	15,6	25,65	2,0	0,90	0,60	192,0	300,0	70,0	20,0	1,5	2,5	3,0	68,0	28	2½
1100	44	32,00-60,00	1 117,6	1 053,6-997,6	1 262,7	1 427,0	1 451,0	1 336,8	1 115,5	1 164,64	15,5	26,42	2,0	0,72	0,48	211,0	310,0	71,8	20,5	1,5	2,5	3,0	68,0	28	2½
1150	46	36,00-65,00	1 168,4	1 096,4-1038,4	1 321,3	1 501,0	1 527,0	1 401,9	1 167,5	1 217,69	15,5	27,00	2,0	0,73	0,49	219,0	324,0	73,5	21,0	1,6	2,6	3,0	74,0	28	2¾
1200	48	36,00-65,00	1 219,2	1 147,2-1089,2	1 394,4	1 590,0	1 618,0	1 482,0	1 217,5	1 269,20	15,6	27,54	2,5	0,95	0,63	218,0	342,0	75,3	21,5	1,6	2,6	3,0	81,0	28	3

© ISO 2020 – All rights reserved

Document Sharing Hub

Full document details: BS EN ISO 27509:2020

Table 11 — Dimensions of CL 1500 weld neck (WN) flanges

DN	NPS	t	A	B	D_{W1}	D_{W2}	D_{W3}	B_{CD}	D_{A1}	D_{A3}	α_{A2}	E_1	E_2	α_{B1}	α_{B2}	H_{W3}	H_{W5}	X	Y	R_A	R_B	R_C	L	n	d_B
		mm	mm	mm	mm	mm	mm	mm	mm	mm	°	mm	mm	°	°	mm	mm	mm	mm	mm	mm	mm	mm		in
15	½	2,77-7,47	21,3	15,8-6,4	49,1	87,0	93,0	67,3	20,8	30,86	15,1	5,30	1,0	0,15	0,10	20,0	51,0	10,5	3,0	0,3	0,5	1,0	15,0	4	½
20	¾	2,87-7,82	26,7	21,0-11,1	54,4	92,0	98,0	72,7	25,8	35,86	15,1	5,30	1,0	0,15	0,10	20,0	53,0	10,5	3,0	0,3	0,5	1,0	15,0	4	½
25	1	3,38-9,09	33,4	26,6-15,2	61,2	99,0	105,0	79,4	32,8	42,85	15,1	5,30	1,0	0,15	0,10	20,0	56,0	10,5	3,0	0,3	0,5	1,0	15,0	4	½
40	1½	3,68-10,15	48,3	40,9-28,0	77,1	115,0	121,0	95,3	47,8	58,89	15,2	5,58	1,0	0,30	0,20	23,0	64,0	12,4	3,5	0,3	0,5	1,0	15,0	8	½
50	2	3,91-11,07	60,3	52,5-38,2	91,7	130,0	136,0	110,0	59,8	71,88	15,2	6,19	1,0	0,30	0,20	23,0	60,0	10,5	3,0	0,4	0,6	1,0	15,0	8	½
65	2½	5,16-14,02	73,0	62,7-45,0	104,8	143,0	149,0	123,1	72,8	85,92	15,3	6,79	1,0	0,45	0,30	26,0	66,0	12,0	3,4	0,4	0,6	1,0	15,0	12	½
80	3	5,49-15,24	88,9	77,9-58,4	126,7	172,0	180,0	148,3	87,8	101,93	15,3	7,42	1,0	0,45	0,30	30,0	73,0	13,8	3,9	0,4	0,7	1,0	18,0	12	⅝
100	4	6,02-17,12	114,3	102,3-80,1	161,0	216,0	224,0	187,0	113,8	129,96	15,3	8,40	1,0	0,49	0,33	37,0	86,0	16,8	4,8	0,5	0,8	1,0	22,0	12	¾
125	5	9,53-19,05	141,3	122,2-103,2	189,6	252,0	261,0	218,6	139,8	157,93	15,3	9,27	1,0	0,49	0,33	43,0	92,0	19,8	5,7	0,5	0,9	1,0	25,0	12	⅞
150	6	10,97-21,95	168,3	146,4-124,4	225,7	297,0	307,0	258,8	167,7	187,94	15,3	10,12	1,5	0,49	0,33	50,0	101,0	23,0	6,6	0,6	1,0	1,0	29,0	12	1
200	8	12,70-25,00	219,1	193,7-169,1	284,4	355,0	365,0	317,4	217,7	239,96	15,3	11,48	1,5	0,49	0,33	60,0	115,0	28,9	8,3	0,7	1,1	1,5	29,0	16	1
250	10	12,70-28,58	273,1	247,7-215,9	354,6	440,0	453,0	393,6	271,7	300,06	15,4	12,90	1,5	0,55	0,37	75,0	136,0	35,1	10,0	0,8	1,3	1,5	35,0	16	1¼
300	12	14,27-33,32	323,9	295,4-257,3	409,3	495,0	508,0	449,0	321,7	349,10	15,4	13,97	1,5	0,58	0,38	83,0	151,0	41,1	11,7	0,8	1,4	1,5	35,0	20	1¼
350	14	19,05-35,71	355,6	317,5-284,2	450,4	544,0	558,0	493,1	353,7	382,15	15,4	14,63	1,5	0,62	0,41	89,0	162,0	44,7	12,8	0,8	1,4	1,5	38,0	20	1⅜
400	16	21,44-40,49	406,4	363,5-325,4	508,6	611,0	626,0	555,2	405,7	436,12	15,4	15,63	1,5	0,53	0,35	105,0	180,0	50,6	14,5	0,9	1,5	2,0	42,0	20	1½
450	18	23,83-45,24	457,2	409,5-366,7	568,6	687,0	704,0	622,3	455,7	488,31	15,5	16,54	1,5	0,68	0,45	111,0	198,0	56,5	16,1	1,0	1,6	2,0	49,0	20	1¾
500	20	26,19-50,01	508,0	455,6-408,0	634,1	759,0	778,0	690,7	507,7	541,29	15,4	17,63	1,5	0,61	0,41	126,0	217,0	62,4	17,8	1,0	1,7	2,0	52,0	20	1⅞
550	22	34,93-53,98	558,8	488,9-450,8	698,3	831,0	850,0	757,9	557,7	593,24	15,4	18,45	2,0	0,53	0,36	142,0	234,0	68,3	19,5	1,1	1,8	2,0	55,0	20	2
600	24	30,96-59,54	609,6	547,7-490,5	762,1	911,0	933,0	829,3	607,7	644,50	15,5	19,23	2,0	0,69	0,46	146,0	253,0	74,2	21,2	1,1	1,9	3,0	62,0	20	2¼
650	26	32,00-60,00	660,4	596,4-540,4	819,7	969,0	990,0	887,0	659,5	697,20	15,3	20,00	2,0	0,49	0,33	172,0	269,0	75,2	21,5	1,1	1,9	3,0	62,0	20	2¼
700	28	36,00-60,00	711,2	639,2-591,2	879,9	1 029,0	1 051,0	947,2	709,5	749,32	15,4	20,92	2,0	0,54	0,36	182,0	285,0	78,8	22,5	1,2	2,0	3,0	62,0	24	2¼
750	30	36,00-65,00	762,0	690,0-632,0	943,5	1 108,0	1 132,0	1 017,5	761,5	802,59	15,4	21,65	2,0	0,67	0,44	186,0	304,0	82,3	23,5	1,3	2,1	3,0	68,0	24	2½
800	32	40,00-70,00	812,8	732,8-672,8	966,8	1 131,0	1 155,0	1 040,8	811,5	853,32	15,3	22,32	2,0	0,52	0,35	202,0	311,0	85,8	24,5	1,3	2,2	3,0	68,0	24	2½
850	34	40,00-75,00	863,6	783,6-713,6	1 026,4	1 206,0	1 232,0	1 107,1	861,5	904,35	15,3	22,97	2,0	0,51	0,34	214,0	328,0	89,3	25,5	1,3	2,2	3,0	74,0	24	2¾
900	36	45,00-80,00	914,4	824,4-754,4	1 096,6	1 308,0	1 339,0	1 191,3	913,5	958,50	15,4	23,82	2,5	0,57	0,38	222,0	352,0	92,8	26,5	1,4	2,3	3,0	88,0	20	3¼
950	38	50,00-80,00	965,2	865,2-805,2	1 156,9	1 383,0	1 416,0	1 257,5	963,5	1 009,72	15,4	24,44	2,5	0,66	0,44	226,0	369,0	96,3	27,5	1,4	2,3	3,0	94,0	20	3½
1000	40	50,00-85,00	1 016,0	916,0-846,0	1 210,4	1 422,0	1 452,0	1 305,0	1 015,5	1 062,52	15,4	25,06	2,5	0,54	0,36	250,0	382,0	99,8	28,5	1,4	2,4	3,0	88,0	24	3¼
1050	42	50,00-90,00	1 066,8	966,8-886,8	1 271,9	1 514,0	1 549,0	1 379,5	1 065,5	1 113,65	15,4	25,65	2,5	0,58	0,39	257,0	402,0	103,3	29,5	1,5	2,5	3,0	101,0	20	3¾
1100	44	55,00-95,00	1 117,6	1 007,6-927,6	1 323,6	1 550,0	1 583,0	1 424,2	1 115,5	1 164,52	15,3	26,42	2,5	0,51	0,34	275,0	413,0	106,8	30,5	1,5	2,5	3,0	94,0	24	3½
1150	46	60,00-110,0	1 168,4	1 048,4-948,4	1 388,9	1 631,0	1 666,0	1 496,5	1 167,5	1 217,65	15,4	27,00	2,5	0,56	0,37	281,0	433,0	110,3	31,5	1,6	2,6	3,0	101,0	24	3¾
1200	48	60,00-115,0	1 219,2	1 099,2-989,2	1 437,0	1 679,0	1 714,0	1 544,7	1 217,5	1 268,44	15,3	27,54	2,5	0,47	0,31	303,0	445,0	110,3	31,5	1,6	2,6	3,0	101,0	24	3¾

© ISO 2020 – All rights reserved

Full document details: BS EN ISO 27509:2020
AVA Documents Document Sharing Hub

Table 12 — Dimensions of CL 2500 weld neck (WN) flanges

DN	NPS	t mm	A mm	B mm	D_{W1} mm	D_{W2} mm	D_{W3} mm	B_{CD} mm	D_{A1} mm	D_{A3} mm	α_{A2} °	E_1 mm	E_2 mm	α_{B1} °	α_{B2} °	H_{W3} mm	H_{W5} mm	X mm	Y mm	R_A mm	R_B mm	R_C mm	L mm	n	d_B in
15	½	2,77-7,47	21,3	15,8-6,4	49,1	87,0	93,0	67,3	20,8	30,86	15,1	5,30	1,0	0,15	0,10	20,0	51,0	10,5	3,0	0,3	0,5	1,0	15,0	4	½
20	¾	2,87-7,82	26,7	21,0-11,1	54,4	92,0	98,0	72,7	25,8	35,86	15,1	5,30	1,0	0,15	0,10	20,0	53,0	10,5	3,0	0,3	0,5	1,0	15,0	4	½
25	1	3,38-9,09	33,4	26,6-15,2	61,2	99,0	105,0	79,4	32,8	42,85	15,1	5,30	1,0	0,15	0,10	20,0	56,0	10,5	3,0	0,3	0,5	1,0	15,0	4	½
40	1½	3,68-12,50	48,3	40,9-23,3	77,1	115,0	121,0	95,3	47,8	58,87	15,2	5,58	1,0	0,25	0,17	23,0	64,0	12,4	3,5	0,3	0,5	1,0	15,0	8	½
50	2	3,91-14,20	60,3	52,5-31,9	94,9	140,0	147,0	116,2	59,8	71,89	15,2	6,19	1,0	0,31	0,21	27,0	72,0	14,7	4,2	0,4	0,6	1,0	18,0	8	⅝
65	2½	7,01-16,00	73,0	59,0-41,0	115,9	170,0	179,0	141,6	72,8	85,91	15,2	6,79	1,0	0,33	0,22	32,0	81,0	17,0	4,9	0,4	0,6	1,0	22,0	8	¾
80	3	5,49-17,50	88,9	77,9-53,9	137,3	199,0	209,0	166,3	87,8	101,94	15,3	7,42	1,0	0,40	0,27	36,0	85,0	20,0	5,7	0,4	0,7	1,0	25,0	8	⅞
100	4	8,56-22,20	114,3	97,2-69,9	167,3	238,0	248,0	200,4	113,8	129,93	15,2	8,40	1,5	0,34	0,23	44,0	95,0	24,6	7,0	0,5	0,8	1,0	29,0	8	1
125	5	15,88-25,0	141,3	109,5-91,3	197,2	268,0	278,0	230,2	139,8	157,91	15,3	9,27	1,5	0,39	0,26	50,0	106,0	29,6	8,5	0,5	0,9	1,0	29,0	12	1
150	6	10,97-30,0	168,3	146,4-108,3	232,7	311,0	322,0	268,8	167,7	187,94	15,3	10,12	1,5	0,41	0,28	58,0	120,0	34,5	9,9	0,6	1,0	1,0	32,0	12	1⅛
200	8	15,09-36,0	219,1	188,9-147,1	301,6	394,0	408,0	343,7	217,7	239,99	15,3	11,48	1,5	0,44	0,29	72,0	145,0	44,0	12,6	0,7	1,1	1,5	38,0	12	1⅜
250	10	15,09-45,0	273,1	242,9-183,1	368,4	470,0	485,0	415,0	271,7	300,08	15,3	12,90	1,5	0,49	0,33	88,0	172,0	53,9	15,4	0,8	1,3	1,5	42,0	16	1½
300	12	17,48-55,0	323,9	288,9-213,9	429,6	548,0	564,0	483,2	321,7	349,17	15,4	13,97	1,5	0,55	0,37	99,0	195,0	63,4	18,1	0,8	1,4	1,5	49,0	16	1¾
350	14	19,05-55,0	355,6	317,5-245,6	474,6	600,0	618,0	531,2	353,7	382,22	15,4	14,63	1,5	0,56	0,37	108,0	211,0	69,2	19,8	0,8	1,4	1,5	52,0	16	1⅞
400	16	21,44-65,0	406,4	363,5-276,4	547,8	697,0	718,0	615,1	405,7	436,37	15,4	15,63	2,0	0,62	0,41	125,0	238,0	78,5	22,4	0,9	1,5	2,0	62,0	16	2¼
450	18	23,88-70,0	457,2	409,4-317,2	609,0	758,0	780,0	676,3	455,7	488,28	15,4	16,54	2,0	0,53	0,36	136,0	260,0	88,0	25,1	1,0	1,6	2,0	62,0	16	2¼
500	20	26,19-80,0	508,0	455,6-348,0	661,8	825,0	849,0	735,0	507,7	541,35	15,4	17,63	2,0	0,56	0,37	147,0	282,0	97,3	27,8	1,0	1,7	2,0	68,0	16	2½
550	22	53,98-85,0	558,8	450,8-388,8	735,0	930,0	958,0	821,8	557,7	593,39	15,4	18,45	2,5	0,54	0,36	163,0	310,0	106,8	30,5	1,1	1,8	2,0	81,0	16	3
600	24	52,37-95,0	609,6	504,9-419,6	797,4	1 008,0	1 039,0	891,3	607,7	644,47	15,4	19,23	2,5	0,56	0,38	176,0	334,0	116,1	33,2	1,1	1,9	3,0	88,0	16	3¼

© ISO 2020 – All rights reserved

Full document details: BS EN ISO 27509:2020

AVA Documents Document Sharing Hub

9.3 Blind flange (BL) dimensions

Dimensions specific to the blind flanges are given in this clause and are defined in Figure 3 and Table 13, Table 14 and Table 15. The diameter B1 for blind flanges is the diameter of flat and no sealing surface without bevel face angle. All other dimensions are found in Table 7 to Table 12 for the WN flanges.

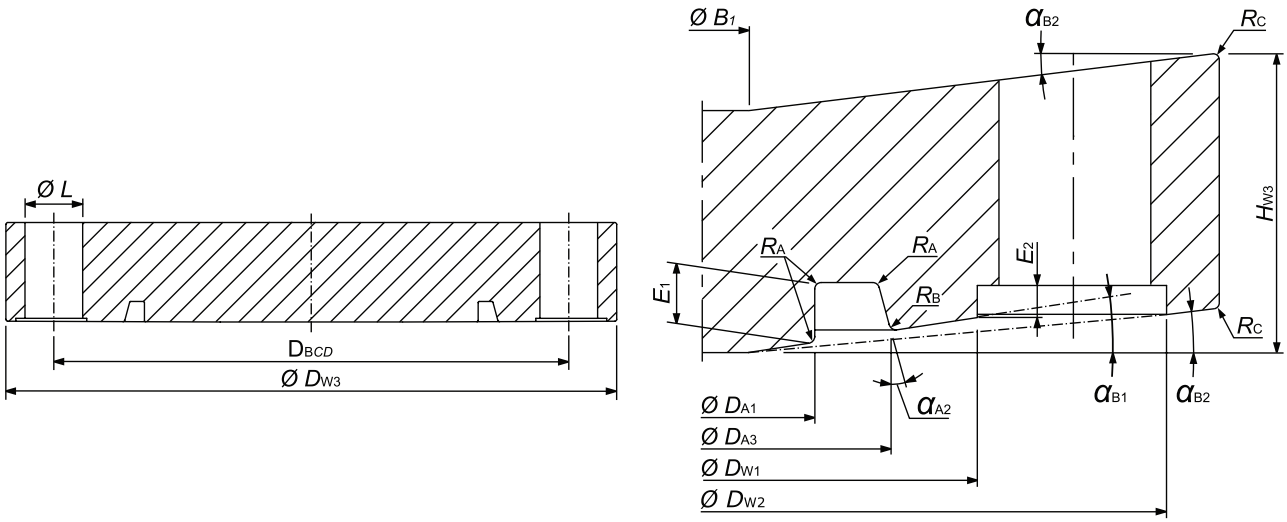

Figure 3 — Nomenclatures for blind flanges (BLs)

© ISO 2020 – All rights reserved

Documents
Document Sharing Hub
Full document details: BS EN ISO 27509:2020

Table 13 — Dimensions for CL 150 and CL 300 blind flanges (BLs)

		CL 150					CL 300				
DN	NPS	B_1 mm	D_{A3} mm	α_{A2} °	α_{B1} °	α_{B2} °	B_1 mm	D_{A3} mm	α_{A2} °	α_{B1} °	α_{B2} °
15	½	9,0	30,87	15,2	0,27	0,18	9,0	30,87	15,2	0,27	0,18
20	¾	13,0	35,87	15,2	0,27	0,18	14,0	35,87	15,2	0,27	0,18
25	1	19,0	42,87	15,2	0,27	0,18	19,0	42,87	15,2	0,27	0,18
40	1½	31,0	58,85	15,2	0,28	0,18	31,0	58,85	15,2	0,28	0,18
50	2	41,0	71,84	15,2	0,27	0,18	41,0	71,84	15,2	0,27	0,18
65	2½	49,0	85,83	15,2	0,22	0,15	49,0	85,83	15,2	0,22	0,15
80	3	63,0	101,87	15,3	0,44	0,30	63,0	101,87	15,3	0,44	0,30
100	4	83,0	129,82	15,2	0,25	0,16	83,0	129,82	15,2	0,25	0,16
125	5	104,0	157,76	15,2	0,28	0,19	104,0	157,76	15,2	0,28	0,19
150	6	126,0	187,70	15,1	0,15	0,10	126,0	187,72	15,1	0,20	0,13
200	8	173,0	239,70	15,2	0,27	0,18	167,0	239,70	15,1	0,20	0,13
250	10	218,0	299,66	15,2	0,23	0,15	209,0	299,68	15,1	0,21	0,14
300	12	260,0	348,63	15,2	0,22	0,15	250,0	348,63	15,1	0,16	0,11
350	14	287,0	381,59	15,1	0,18	0,12	275,0	381,61	15,1	0,17	0,11
400	16	328,0	435,60	15,2	0,25	0,17	315,0	435,61	15,1	0,20	0,13
450	18	371,0	487,53	15,1	0,19	0,12	355,0	487,56	15,1	0,18	0,12
500	20	413,0	540,50	15,1	0,18	0,12	396,0	540,53	15,1	0,17	0,11
550	22	456,0	592,47	15,1	0,18	0,12	437,0	592,50	15,1	0,17	0,11
600	24	496,0	643,46	15,1	0,21	0,14	478,0	643,50	15,1	0,19	0,13
650	26	539,0	696,35	15,1	0,17	0,11	517,0	696,42	15,1	0,19	0,13
700	28	581,0	748,32	15,1	0,17	0,12	558,0	748,36	15,1	0,17	0,11
750	30	624,0	801,29	15,1	0,17	0,12	598,0	801,37	15,1	0,20	0,13
800	32	665,0	852,26	15,1	0,17	0,11	639,0	852,32	15,1	0,17	0,12
850	34	707,0	903,23	15,1	0,18	0,12	678,0	903,33	15,1	0,20	0,13
900	36	750,0	957,19	15,1	0,17	0,11	719,0	957,26	15,1	0,18	0,12
950	38	792,0	1 008,17	15,1	0,17	0,12	760,0	1 008,24	15,1	0,18	0,12
1000	40	835,0	1 061,14	15,1	0,18	0,12	801,0	1 061,21	15,1	0,18	0,12
1050	42	876,0	1 112,10	15,1	0,17	0,12	840,0	1 112,20	15,1	0,19	0,12
1100	44	918,0	1 163,05	15,1	0,16	0,10	881,0	1 163,18	15,1	0,19	0,13
1150	46	961,0	1 216,02	15,1	0,16	0,10	921,0	1 216,14	15,1	0,19	0,12
1200	48	1 003,0	1 266,99	15,1	0,16	0,10	962,0	1 267,09	15,1	0,17	0,12

© ISO 2020 – All rights reserved
Documents
Document Sharing Hub
Full document details: BS EN ISO 27509:2020

Table 14 — Dimensions for CL 600 and CL 900 blind flanges (BLs)

		CL 600					CL 900				
DN	**NPS**	B_1 mm	D_{A3} mm	α_{A2} °	α_{B1} °	α_{B2} °	B_1 mm	D_{A3} mm	α_{A2} °	α_{B1} °	α_{B2} °
15	½	2,0	30,85	15,1	0,15	0,10	2,0	30,85	15,1	0,15	0,10
20	¾	3,0	35,85	15,1	0,15	0,10	3,0	35,85	15,1	0,15	0,10
25	1	7,0	42,85	15,1	0,15	0,10	7,0	42,85	15,1	0,15	0,10
40	1½	14,0	58,86	15,1	0,20	0,13	14,0	58,86	15,1	0,20	0,13
50	2	27,0	71,85	15,1	0,22	0,14	27,0	71,85	15,1	0,22	0,14
65	2½	36,0	85,86	15,2	0,25	0,16	36,0	85,86	15,2	0,25	0,16
80	3	53,0	101,85	15,2	0,27	0,18	53,0	101,85	15,2	0,27	0,18
100	4	71,0	129,85	15,2	0,28	0,18	71,0	129,85	15,2	0,28	0,18
125	5	90,0	157,76	15,1	0,20	0,13	90,0	157,76	15,1	0,20	0,13
150	6	117,0	187,74	15,1	0,19	0,12	109,0	187,75	15,1	0,20	0,13
200	8	155,0	239,72	15,1	0,21	0,14	143,0	239,76	15,2	0,24	0,16
250	10	196,0	299,70	15,1	0,20	0,13	180,0	299,72	15,1	0,21	0,14
300	12	233,0	348,69	15,2	0,22	0,15	216,0	348,71	15,1	0,21	0,14
350	14	257,0	381,68	15,2	0,22	0,15	238,0	381,70	15,1	0,22	0,14
400	16	294,0	435,66	15,1	0,22	0,14	274,0	435,69	15,2	0,23	0,15
450	18	332,0	487,66	15,2	0,24	0,16	308,0	487,69	15,2	0,24	0,16
500	20	369,0	540,62	15,2	0,23	0,15	343,0	540,68	15,2	0,25	0,16
550	22	406,0	592,58	15,1	0,21	0,14	379,0	592,67	15,2	0,25	0,17
600	24	445,0	643,56	15,1	0,21	0,14	413,0	643,67	15,2	0,26	0,17
650	26	483,0	696,48	15,1	0,21	0,14	449,0	696,60	15,2	0,26	0,17
700	28	520,0	748,49	15,2	0,23	0,15	485,0	748,48	15,1	0,18	0,12
750	30	558,0	801,46	15,2	0,23	0,15	519,0	801,47	15,1	0,19	0,13
800	32	595,0	852,42	15,1	0,21	0,14	554,0	852,47	15,1	0,20	0,13
850	34	634,0	903,43	15,2	0,23	0,15	590,0	903,58	15,2	0,28	0,18
900	36	672,0	957,33	15,1	0,18	0,12	626,0	957,44	15,1	0,20	0,13
950	38	709,0	1 008,36	15,1	0,21	0,14	660,0	1 008,56	15,2	0,28	0,19
1000	40	746,0	1 061,34	15,2	0,22	0,15	695,0	1 061,44	15,2	0,22	0,15
1050	42	784,0	1 112,27	15,1	0,19	0,12	731,0	1 112,48	15,2	0,25	0,17
1100	44	823,0	1 163,26	15,1	0,20	0,13	765,0	1 163,35	15,1	0,20	0,13
1150	46	860,0	1 216,30	15,2	0,23	0,15	801,0	1 216,36	15,1	0,21	0,14
1200	48	898,0	1 267,19	15,1	0,18	0,12	836,0	1 267,51	15,2	0,28	0,19

© ISO 2020 – All rights reserved

Documents
Document Sharing Hub
Full document details: BS EN ISO 27509:2020

Table 15 — Dimensions for CL 1500 and CL 2500 blind flanges (BLs)

		CL 1500					CL 2500				
DN	NPS	B_1 mm	D_{A3} mm	α_{A2} °	α_{B1} °	α_{B2} °	B_1 mm	D_{A3} mm	α_{A2} °	α_{B1} °	α_{B2} °
15	½	2,0	30,85	15,1	0,15	0,10	2,0	30,85	15,1	0,15	0,10
20	¾	3,0	35,85	15,1	0,15	0,10	3,0	35,85	15,1	0,15	0,10
25	1	7,0	42,85	15,1	0,15	0,10	7,0	42,85	15,1	0,15	0,10
40	1½	14,0	58,86	15,1	0,20	0,13	14,0	58,86	15,1	0,20	0,13
50	2	27,0	71,85	15,1	0,22	0,14	19,0	71,87	15,2	0,24	0,16
65	2½	36,0	85,86	15,2	0,25	0,16	26,0	85,88	15,2	0,26	0,17
80	3	44,0	101,88	15,2	0,31	0,21	32,0	101,90	15,2	0,29	0,20
100	4	60,0	129,88	15,2	0,30	0,20	43,0	129,88	15,2	0,24	0,16
125	5	77,0	157,83	15,2	0,29	0,19	56,0	157,84	15,2	0,28	0,18
150	6	92,0	187,82	15,2	0,28	0,19	68,0	187,84	15,2	0,26	0,17
200	8	122,0	239,80	15,2	0,25	0,17	90,0	239,85	15,2	0,27	0,18
250	10	155,0	299,81	15,2	0,26	0,18	114,0	299,87	15,2	0,29	0,19
300	12	185,0	348,79	15,2	0,26	0,17	138,0	348,91	15,2	0,32	0,21
350	14	204,0	381,81	15,2	0,29	0,19	151,0	381,91	15,2	0,32	0,21
400	16	235,0	435,76	15,2	0,23	0,15	175,0	435,99	15,2	0,36	0,24
450	18	265,0	487,83	15,2	0,31	0,21	197,0	487,90	15,2	0,29	0,20
500	20	294,0	540,79	15,2	0,27	0,18	219,0	540,91	15,2	0,30	0,20
550	22	325,0	592,75	15,2	0,24	0,16	243,0	593,00	15,2	0,34	0,23
600	24	355,0	643,85	15,2	0,31	0,21	265,0	644,03	15,2	0,35	0,23
650	26	386,0	696,62	15,1	0,20	0,13					
700	28	417,0	748,63	15,1	0,21	0,14					
750	30	445,0	801,72	15,2	0,27	0,18					
800	32	476,0	852,56	15,1	0,19	0,13					
850	34	507,0	903,54	15,1	0,19	0,13					
900	36	537,0	957,61	15,2	0,23	0,15					
950	38	568,0	1 008,68	15,2	0,26	0,18					
1000	40	597,0	1 061,53	15,1	0,20	0,13					
1050	42	627,0	1 112,57	15,2	0,22	0,15					
1100	44	658,0	1 163,47	15,1	0,19	0,13					
1150	46	689,0	1 216,54	15,1	0,22	0,14					
1200	48	719,0	1 267,40	15,1	0,17	0,12					

9.4 Integral flange (IF) dimensions

Dimensions specific to the integral flanges are given in this clause and are defined in Figure 4 and Table 16 to Table 21. All other dimensions are found in Table 7 to Table 12 for the WN flanges. Dimensions for valves shall conform with requirements in ASME B16.34 and ISO 14313. The face angles for the integral flanges are based on the stiffness of flange ring and flange neck as outlined from requirements of ASME B16.34 and ISO 14313. For each flange size, two face angles are listed. One for the minimum neck thickness that can be used, t_{min}, and the other angle is valid for the maximum neck thickness that can be used, t_{max}.

For all integral flanges the face dimensions shall be interpolated between their listed values at maximum and minimum neck thickness. Calculating methods and examples are included in Annex B. The minimum value for flange face angle α_{B1} is set to 0,15°. Any calculation resulting in smaller angles than 0,15° shall select angles and dimension corresponding to 0,15°.

© ISO 2020 – All rights reserved
Documents
Document Sharing Hub
Full document details: BS EN ISO 27509:2020