BS EN ISO 2808:2019

BSI Standards Publication

Paints and varnishes – Determination of film thickness (ISO 2808:2019)

Documents
Document Sharing Hub

Full document details: BS EN ISO 2808:2019

National foreword

This British Standard is the UK implementation of EN ISO 2808:2019. It supersedes BS EN ISO 2808:2007, which is withdrawn.

The UK participation in its preparation was entrusted to Technical Committee STI/10, Test methods for paints.

A list of organizations represented on this committee can be obtained on request to its secretary.

This publication does not purport to include all the necessary provisions of a contract. Users are responsible for its correct application.

© The British Standards Institution 2019
Published by BSI Standards Limited 2019

ISBN 978 0 539 00915 6

ICS 87.040

Compliance with a British Standard cannot confer immunity from legal obligations.

This British Standard was published under the authority of the Standards Policy and Strategy Committee on 30 September 2019.

Amendments/corrigenda issued since publication

Date	Text affected

Documents
Document Sharing Hub

Full document details: BS EN ISO 2808:2019

EUROPEAN STANDARD

NORME EUROPÉENNE

EUROPÄISCHE NORM

EN ISO 2808

September 2019

ICS 87.040

Supersedes EN ISO 2808:2007

English Version

Paints and varnishes - Determination of film thickness (ISO 2808:2019)

Peintures et vernis - Détermination de l'épaisseur du feuil (ISO 2808:2019)

Beschichtungsstoffe - Bestimmung der Schichtdicke (ISO 2808:2019)

This European Standard was approved by CEN on 21 July 2019.

CEN members are bound to comply with the CEN/CENELEC Internal Regulations which stipulate the conditions for giving this European Standard the status of a national standard without any alteration. Up-to-date lists and bibliographical references concerning such national standards may be obtained on application to the CEN-CENELEC Management Centre or to any CEN member.

This European Standard exists in three official versions (English, French, German). A version in any other language made by translation under the responsibility of a CEN member into its own language and notified to the CEN-CENELEC Management Centre has the same status as the official versions.

CEN members are the national standards bodies of Austria, Belgium, Bulgaria, Croatia, Cyprus, Czech Republic, Denmark, Estonia, Finland, France, Germany, Greece, Hungary, Iceland, Ireland, Italy, Latvia, Lithuania, Luxembourg, Malta, Netherlands, Norway, Poland, Portugal, Republic of North Macedonia, Romania, Serbia, Slovakia, Slovenia, Spain, Sweden, Switzerland, Turkey and United Kingdom.

EUROPEAN COMMITTEE FOR STANDARDIZATION
COMITÉ EUROPÉEN DE NORMALISATION
EUROPÄISCHES KOMITEE FÜR NORMUNG

CEN-CENELEC Management Centre: Rue de la Science 23, B-1040 Brussels

© 2019 CEN All rights of exploitation in any form and by any means reserved worldwide for CEN national Members.

Ref. No. EN ISO 2808:2019 E

Documents
Document Sharing Hub

Full document details: BS EN ISO 2808:2019

European foreword

This document (EN ISO 2808:2019) has been prepared by Technical Committee ISO/TC 35 "Paints and varnishes" in collaboration with Technical Committee CEN/TC 139 “Paints and varnishes” the secretariat of which is held by DIN.

This European Standard shall be given the status of a national standard, either by publication of an identical text or by endorsement, at the latest by March 2020, and conflicting national standards shall be withdrawn at the latest by March 2020.

Attention is drawn to the possibility that some of the elements of this document may be the subject of patent rights. CEN shall not be held responsible for identifying any or all such patent rights.

This document supersedes EN ISO 2808:2007.

According to the CEN-CENELEC Internal Regulations, the national standards organizations of the following countries are bound to implement this European Standard: Austria, Belgium, Bulgaria, Croatia, Cyprus, Czech Republic, Denmark, Estonia, Finland, France, Germany, Greece, Hungary, Iceland, Ireland, Italy, Latvia, Lithuania, Luxembourg, Malta, Netherlands, Norway, Poland, Portugal, Republic of North Macedonia, Romania, Serbia, Slovakia, Slovenia, Spain, Sweden, Switzerland, Turkey and the United Kingdom.

Endorsement notice

The text of ISO 2808:2019 has been approved by CEN as EN ISO 2808:2019 without any modification.

AVA Documents
Document Sharing Hub

Full document details: BS EN ISO 2808:2019

Contents

Page

Foreword ... **v**

Introduction ... **vi**

1 Scope ... **1**

2 Normative references ... **1**

3 Terms and definitions ... **1**

4 Determination of wet-film thickness ... **5**
4.1 General ... 5
4.2 Mechanical methods ... 5
4.2.1 Principle ... 5
4.2.2 Field of application ... 5
4.2.3 General ... 5
4.2.4 Method 1A — Comb gauge ... 5
4.2.5 Method 1B — Wheel gauge ... 6
4.2.6 Method 1C — Dial gauge ... 7
4.3 Gravimetric method ... 9
4.3.1 Principle ... 9
4.3.2 Field of application ... 9
4.3.3 General ... 9
4.3.4 Method 2 — By difference in mass ... 9
4.4 Photothermal method ... 10
4.4.1 Principle ... 10
4.4.2 Field of application ... 10
4.4.3 General ... 10
4.4.4 Method 3 — Determination using thermal properties ... 11

5 Determination of dry-film thickness ... **11**
5.1 General ... 11
5.2 Mechanical methods ... 11
5.2.1 Principle ... 11
5.2.2 Field of application ... 12
5.2.3 General ... 12
5.2.4 Method 4A — By difference in thickness ... 12
5.2.5 Method 4B — Depth gauging ... 15
5.2.6 Method 4C — Surface profile scanning ... 17
5.3 Gravimetric method ... 18
5.3.1 Principle ... 18
5.3.2 Field of application ... 19
5.3.3 General ... 19
5.3.4 Method 5 — By difference in mass ... 19
5.4 Optical methods ... 19
5.4.1 Principle ... 19
5.4.2 Field of application ... 22
5.4.3 General ... 22
5.4.4 Method 6A — Cross-sectioning ... 23
5.4.5 Method 6B — Wedge cut ... 24
5.4.6 Method 6C — White-light interferometry ... 24
5.5 Magnetic methods ... 25
5.5.1 Principle ... 25
5.5.2 Field of application ... 25
5.5.3 General ... 25
5.5.4 Method 7A — Magnetic pull-off gauge ... 25
5.5.5 Method 7B.1 — Magnetic-flux gauge ... 26
5.5.6 Method 7B.2 — Magnetic field change, magnetic-induction principle ... 27

AVA Documents
Document Sharing Hub

© ISO 2019 – All rights reserved

Full document details: BS EN ISO 2808:2019

5.5.7 Method 7C — Eddy-current gauge 28
5.6 Radiological method 29
5.6.1 Principle 29
5.6.2 Field of application 29
5.6.3 General 29
5.6.4 Method 8 — Beta backscatter method 30
5.7 Photothermal method 30
5.7.1 Principle 30
5.7.2 Field of application 31
5.7.3 General 31
5.7.4 Method 9 — Determination using thermal properties 31
5.8 Acoustic method 32
5.8.1 Principle 32
5.8.2 Field of application 32
5.8.3 General 32
5.8.4 Method 10 — Ultrasonic reflection 32
5.9 Electromagnetic method 33
5.9.1 Method 11 — Terahertz method 33

6 Determination of thickness of uncured powder layers 35
6.1 General 35
6.2 Gravimetric method 35
6.2.1 Principle 35
6.2.2 Field of application 35
6.2.3 General 35
6.2.4 Method 12 — By difference in mass 35
6.3 Magnetic methods 36
6.3.1 Principle 36
6.3.2 Field of application 36
6.3.3 General 36
6.3.4 Method 13A — Magnetic-induction method 36
6.3.5 Method 13B — Eddy-current 37
6.4 Photothermal method 38
6.4.1 Principle 38
6.4.2 Field of application 39
6.4.3 General 39
6.4.4 Method 14 — Determination using thermal properties 39

7 Test report 39

Annex A (informative) **Overview of methods 41**

Annex B (informative) **Measurement of film thickness on rough surfaces 44**

Annex C (informative) **Factors affecting the precision of readings obtained when measuring on wooden substrates 46**

Bibliography 48

© ISO 2019 – All rights reserved
Documents
Document Sharing Hub
Full document details: BS EN ISO 2808:2019

Foreword

ISO (the International Organization for Standardization) is a worldwide federation of national standards bodies (ISO member bodies). The work of preparing International Standards is normally carried out through ISO technical committees. Each member body interested in a subject for which a technical committee has been established has the right to be represented on that committee. International organizations, governmental and non-governmental, in liaison with ISO, also take part in the work. ISO collaborates closely with the International Electrotechnical Commission (IEC) on all matters of electrotechnical standardization.

The procedures used to develop this document and those intended for its further maintenance are described in the ISO/IEC Directives, Part 1. In particular, the different approval criteria needed for the different types of ISO documents should be noted. This document was drafted in accordance with the editorial rules of the ISO/IEC Directives, Part 2 (see www.iso.org/directives).

Attention is drawn to the possibility that some of the elements of this document may be the subject of patent rights. ISO shall not be held responsible for identifying any or all such patent rights. Details of any patent rights identified during the development of the document will be in the Introduction and/or on the ISO list of patent declarations received (see www.iso.org/patents).

Any trade name used in this document is information given for the convenience of users and does not constitute an endorsement.

For an explanation of the voluntary nature of standards, the meaning of ISO specific terms and expressions related to conformity assessment, as well as information about ISO's adherence to the World Trade Organization (WTO) principles in the Technical Barriers to Trade (TBT) see www.iso.org/iso/foreword.html.

This document was prepared by Technical Committee ISO/TC 35, *Paints and varnishes*, SC 9, *General test methods for paints and varnishes.*

This fifth edition cancels and replaces the fourth edition (ISO 2808:2007), which has been technically revised. The main changes compared to the previous edition are as follows:

— the terms and definitions have been updated to ISO 4618 and ISO/IEC Guide 99;

— the principle has been revised;

— white-light interferometer has been added as method 6C;

— the terahertz method has been added as method 11;

— the existing methods have been adapted to the current state of metrology;

— the characterisation of the methods and procedures in Annex A have been revised;

— information in Annex A on the precision of the individual methods has been adapted to current standards;

— the references to test standards and constructions standards in Annex A have been updated;

— former Clause 7 on measurement of the film thickness on rough surfaces has been moved to Annex B;

— Annex C, on factors which influence measuring accuracy when measurements are performed on wood has been added.

Any feedback or questions on this document should be directed to the user's national standards body. A complete listing of these bodies can be found at www.iso.org/members.html.

© ISO 2019 – All rights reserved

Documents
Document Sharing Hub
Full document details: BS EN ISO 2808:2019

Introduction

This document consistently enumerates the individual coatings applied in a multi-layer system by referring to the first coating applied on the substrate as coating 1. Some other standards referring to individual test methods enumerate in reverse order.

© ISO 2019 – All rights reserved
Documents
Document Sharing Hub
Full document details: BS EN ISO 2808:2019

Paints and varnishes — Determination of film thickness

1 Scope

This document describes methods for measuring the thickness of coatings applied to a substrate. Methods for determining wet-film thickness, dry-film thickness and the film thickness of uncured powder layers are described.

For each method described, this document provides an overview of the field of application, existing standards and the precision.

Information on measuring film thickness on rough surfaces is given in Annex B.

Information on measuring film thickness on wooden substrates is given in Annex C.

2 Normative references

The following documents are referred to in the text in such a way that some or all of their content constitutes requirements of this document. For dated references, only the edition cited applies. For undated references, the latest edition of the referenced document (including any amendments) applies.

ISO 3611, *Geometrical product specifications (GPS) — Dimensional measuring equipment: Micrometers for external measurements — Design and metrological characteristics*

ISO 4618, *Paints and varnishes — Terms and definitions*

ISO 8503-1, *Preparation of steel substrates before application of paints and related products — Surface roughness characteristics of blast-cleaned steel substrates — Part 1: Specifications and definitions for ISO surface profile comparators for the assessment of abrasive blast-cleaned surfaces*

3 Terms and definitions

For the purposes of this document, the terms and definitions given in ISO 4618 and the following apply.

ISO and IEC maintain terminological databases for use in standardization at the following addresses:

— ISO Online browsing platform: available at https://www.iso.org/obp

— IEC Electropedia: available at http://www.electropedia.org/

3.1
film thickness
distance between the surface of the film and the surface of the substrate

3.2
wet-film thickness
thickness of a freshly applied wet coating material, measured immediately after application

3.3
dry-film thickness
thickness of a coating remaining on the surface when the coating has hardened

3.4
thickness of uncured powder layer
thickness of a freshly applied coating material in powder form, measured immediately after application and before stoving

© ISO 2019 – All rights reserved

Documents
Document Sharing Hub
Full document details: BS EN ISO 2808:2019

3.5
relevant surface area
part of an object covered or to be covered by the coating and for which the coating is essential for serviceability and/or appearance

Note 1 to entry: Measurement of this property is only required for the extended evaluation of film thickness measurements; see Clause 7, k) and l).

3.6
test area
representative part of the relevant surface area within which an agreed number of single measurements is made as a spot-check

Note 1 to entry: Measurement of this property is only required for the extended evaluation of film thickness measurements; see Clause 7, k) and l).

3.7
measurement area
area over which a single measurement is made

Note 1 to entry: Measurement of this property is only required for the extended evaluation of film thickness measurements; see Clause 7, k) and l).

3.8
minimum local film thickness
lowest value of the local film thickness found on the relevant surface area of a particular test specimen

Note 1 to entry: Measurement of this property is only required for the extended evaluation of film thickness measurements; see Clause 7, k) and l).

3.9
maximum local film thickness
highest value of the local film thickness found on the relevant surface area of a particular test specimen

Note 1 to entry: Measurement of this property is only required for the extended evaluation of film thickness measurements; see Clause 7, k) and l).

3.10
mean film thickness
arithmetic mean of all the individual *dry-film thicknesses* (3.3) in the test area or the result of a gravimetric determination of the thickness

Note 1 to entry: Measurement of this property is only required for the extended evaluation of film thickness measurements; see Clause 7, k) and l).

3.11
calibration
operation that, under specified conditions, in a first step, establishes a relation between the quantity values with measurement uncertainties provided by measurement standards and corresponding indications with associated measurement uncertainties and, in a second step, uses this information to establish a relation for obtaining a measurement result from an indication

Note 1 to entry: A calibration may be expressed by a statement, calibration function, calibration diagram, calibration curve, or calibration table. In some cases, it may consist of an additive or multiplicative correction of the indication with associated measurement uncertainty.

Note 2 to entry: Calibration should not be confused with adjustment of a measuring system, often mistakenly called "self-calibration", nor with verification of calibration.

Note 3 to entry: Often, the first step alone in the above definition is perceived as being calibration.

[SOURCE: ISO/IEC Guide 99:2007, 2.39]

© ISO 2019 – All rights reserved
Documents
Document Sharing Hub
Full document details: BS EN ISO 2808:2019

3.12
verification
provision of objective evidence that a given item fulfils specified requirements

EXAMPLE 1 Confirmation that a given reference material as claimed is homogeneous for the quantity value and measurement procedure concerned, down to a measurement portion having a mass of 10 mg.

EXAMPLE 2 Confirmation that performance properties or legal requirements of a measuring system are achieved.

EXAMPLE 3 Confirmation that a target measurement uncertainty can be met.

Note 1 to entry: When applicable, measurement uncertainty should be taken into consideration.

Note 2 to entry: The item may be, e.g. a process, measurement procedure, material, compound, or measuring system.

Note 3 to entry: The specified requirements may be, e.g. that a manufacturer's specifications are met.

Note 4 to entry: Verification in legal metrology, as defined in VIML, and in conformity assessment in general, pertains to the examination and marking and/or issuing of a verification certificate for a measuring system.

Note 5 to entry: Verification should not be confused with calibration. Not every verification is a validation.

Note 6 to entry: In chemistry, verification of the identity of the entity involved, or of activity, requires a description of the structure or properties of that entity or activity.

[SOURCE: ISO/IEC Guide 99:2007, 2.44]

3.13
reference material
RM
material, sufficiently homogeneous and stable with reference to specified properties, which has been established to be fit for its intended use in measurement or in examination of nominal properties

Note 1 to entry: Examination of a nominal property provides a nominal property value and associated uncertainty. This uncertainty is not a measurement uncertainty.

Note 2 to entry: Reference materials with or without assigned quantity values can be used for measurement precision control whereas only reference materials with assigned quantity values can be used for calibration or measurement trueness control.

Note 3 to entry: "Reference material" comprises materials embodying quantities as well as nominal properties.

EXAMPLE 1 Examples of reference materials embodying quantities:

a) water of stated purity, the dynamic viscosity of which is used to calibrate viscometers;

b) human serum without an assigned quantity value for the amount-of-substance concentration of the inherent cholesterol, used only as a measurement precision control material;

c) fish tissue containing a stated mass fraction of a dioxin, used as a calibrator.

EXAMPLE 2 Examples of reference materials embodying nominal properties:

a) colour chart indicating one or more specified colours;

b) DNA compound containing a specified nucleotide sequence;

c) urine containing 19-androstenedione.

Note 4 to entry: A reference material is sometimes incorporated into a specially fabricated device.

EXAMPLE 3 Substance of known triple-point in a triple-point cell.

EXAMPLE 4 Glass of known optical density in a transmission filter holder.

© ISO 2019 – All rights reserved

Documents
Document Sharing Hub
Full document details: BS EN ISO 2808:2019

EXAMPLE 5 Spheres of uniform size mounted on a microscope slide.

Note 5 to entry: Some reference materials have assigned quantity values that are metrologically traceable to a measurement unit outside a system of units. Such materials include vaccines to which International Units (IU) have been assigned by the World Health Organization.

Note 6 to entry: In a given measurement, a given reference material can only be used for either calibration or quality assurance.

Note 7 to entry: The specifications of a reference material should include its material traceability, indicating its origin and processing (Accred. Qual. Assur.:2006).

Note 8 to entry: ISO/REMCO has an analogous definition but uses the term "measurement process" to mean "examination" (ISO 15189:2007, 3.4), which covers both measurement of a quantity and examination of a nominal property.

Note 9 to entry: Reference materials may be coated thickness standards, or shims. If agreed to by the contracting parties, a part of the test specimen may be used as a thickness standard for a particular job.

[SOURCE: ISO/IEC Guide 99:2007, 5.13, modified — Note 9 to entry has been added.]

3.14
adjustment
adjustment of a measuring system
set of operations carried out on a measuring system so that it provides prescribed indications corresponding to given values of a quantity to be measured

Note 1 to entry: Types of adjustment of a measuring system include zero adjustment of a measuring system, offset adjustment, and span adjustment (sometimes called gain adjustment).

Note 2 to entry: Adjustment of a measuring system should not be confused with calibration, which is a prerequisite for adjustment.

Note 3 to entry: After an adjustment of a measuring system, the measuring system must usually be recalibrated.

Note 4 to entry: Most digital measurement instruments can be adjusted on a thickness standard or on a shim, where the thickness of the coating or of the shim is known.

[SOURCE: ISO/IEC Guide 99:2007, 3.11, modified — Note 4 to entry has been added and “adjustment” is used as the first preferred term.]

3.15
accuracy
measurement accuracy
accuracy of measurement
closeness of agreement between a measured quantity value and a true quantity value of a measurand

Note 1 to entry: The concept "measurement accuracy" is not a quantity and is not given a numerical quantity value. A measurement is said to be more accurate when it offers a smaller measurement error.

Note 2 to entry: The term "measurement accuracy" should not be used for measurement trueness and the term measurement precision should not be used for ‘measurement accuracy’, which, however, is related to both these concepts.

Note 3 to entry: "Measurement accuracy" is sometimes understood as closeness of agreement between measured quantity values that are being attributed to the measurand.

[SOURCE: ISO/IEC Guide 99:2007, 2.13, modified — “accuracy” is used as the preferred term.]

© ISO 2019 – All rights reserved
Documents
Document Sharing Hub
Full document details: BS EN ISO 2808:2019

4 Determination of wet-film thickness

4.1 General

Annex A gives an overview of the methods used for the determination of wet-film thickness.

4.2 Mechanical methods

4.2.1 Principle

With mechanical procedures, the measuring instrument (see Figures 1, 2 and 3, Key 4) passes through by the coating being placed on the surface of the substrate. The difference between the points of contact (substrate, see Figures 1, 2 and 3, Key 1) and the coating surface touched from the top of the measurement instrument (Figures 1, 2 and 3, Key 3) corresponds to the readable wet-film thickness.

4.2.2 Field of application

The mechanical principle is suitable for all film-substrate combinations. The substrate has to be flat in at least one direction in the area where the measurement is performed. Curvature of the surface in a single plane is permissible (e.g. internal or external surface of pipes).

4.2.3 General

Classification as a destructive or non-destructive method depends on:

a) the rheological properties of the coating material;

b) the nature of the wetting contact between the contact surfaces of the measurement instrument and the coating material;

c) whether the thickness measurements will make the coating unsuitable for the purpose for which it is intended.

Since the possibility of pigment particles remaining between the gauge and the substrate cannot be excluded, all mechanical methods contain a systematic error: the film thickness displayed is smaller than the actual wet-film thickness by at least the mean diameter of the pigment particles.

In the case of a wheel gauge (method 1B, see 4.2.5), the wheel has to be wetted by the coating material. If not, this represents a further source of systematic error which can result in exaggerated readings and is a function of:

— the surface tension and the rheological properties of the coating material;

— the material of the wheel gauge;

— the speed at which the wheel is turned.

4.2.4 Method 1A — Comb gauge

4.2.4.1 Description of instrument

A comb gauge is a flat plate made of a corrosion-resistant material with teeth along its edges (see Figure 1). The reference teeth at the corners of the plate define a baseline along which the inner teeth are arranged to give a graduated series of gaps. Each tooth is labelled with the assigned gap value.

With commercially available comb gauges, the maximum thickness which can be measured is typically 2 000 µm and the smallest increment is typically 5 µm.

© ISO 2019 – All rights reserved

Documents
Document Sharing Hub
Full document details: BS EN ISO 2808:2019

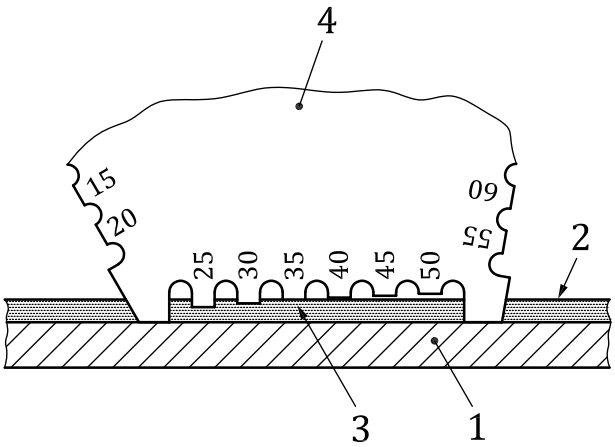

Key

1 substrate

2 coating

3 point of wetting contact

4 comb gauge

Figure 1 — Example of a comb gauge

4.2.4.2 Procedure

Ensure that the teeth are clean and not worn out or damaged. Place the comb gauge onto the flat specimen surface such that the teeth are normal to the plane of the surface. Allow sufficient time for the coating to wet the teeth prior to removing the gauge.

In the case of specimens curved in a single plane, the comb gauge shall be placed in position parallel to the axis of curvature.

The thickness shall be measured directly after application since the result will be influenced, for example, by physical drying, curing or solvent loss.

Take the greatest gap reading of the tooth wetted by the coating material as the wet-film thickness.

4.2.5 Method 1B — Wheel gauge

4.2.5.1 Description of instrument

A wheel gauge consists of a wheel, made of hardened and corrosion-resistant steel, with three projecting rims (see Figure 2).

Two rims are ground to the same diameter and are configured concentrically to the wheel axle. The third rim has a smaller diameter and is eccentrically ground. One of the outer rims has a scale from which the respective protrusion of the concentric rims relative to the eccentric rim can be read.

Two versions are available:

— version 1 has the eccentric rim located between the concentric rims;

— version 2 has the eccentric rim located systematically outside the concentric rims and closely adjacent to one of them.

NOTE Unlike version 1, the design of version 2 allows parallax-free reading of the wet-film thickness.

© ISO 2019 – All rights reserved
Documents
Document Sharing Hub
Full document details: BS EN ISO 2808:2019

With commercially available wheel gauges, the maximum thickness which can be measured is typically 1 500 µm and the smallest increment is typically 2 µm.

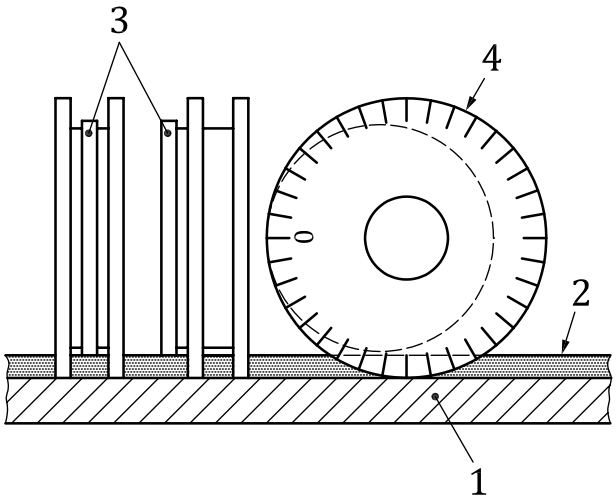

Key

1 substrate
2 coating
3 eccentric rim
4 wheel gauge

Figure 2 — Example of a wheel gauge

4.2.5.2 Procedure

Grip the wheel gauge with the thumb and index finger by the wheel axle and press the concentric rims onto the surface at the point of the largest reading on the scale.

In the case of specimens curved in a single plane, the axis of curvature and the wheel gauge axle shall be parallel.

Roll the wheel gauge in one direction, lift it from the surface and read off the highest scale reading at which the eccentric rim is still wetted by the coating material. Clean the gauge and repeat in the other direction.

Calculate the wet-film thickness as the arithmetic mean of these readings.

The thickness shall be measured directly after application since the result will be influenced, for example, by physical drying, curing or solvent loss.

To minimize the effect of surface tension on the result, observe how the paint wets the eccentric rim and record the scale reading at the first point of contact. This is only possible with version 2 of the wheel gauge.

4.2.6 Method 1C — Dial gauge

4.2.6.1 Instrument and reference materials (reference standard)

4.2.6.1.1 Dial gauge [see Figure 3 a) and b)]

Analogue dial gauges conforming to the requirements of ISO 463 and digital dial gauges are typically capable of measuring to an accuracy of 5 µm (analogue dial gauge) or 1 µm (digital dial gauge), or better. The gauge can have an analogue or digital display.

© ISO 2019 – All rights reserved

Documents
Document Sharing Hub
Full document details: BS EN ISO 2808:2019

The underside of the dial gauge has two contact pins of equal length located equidistant from the movable plunger and in a straight line with it. An adjusting screw is used to make careful adjustments to the position of the plunger in its guideway.

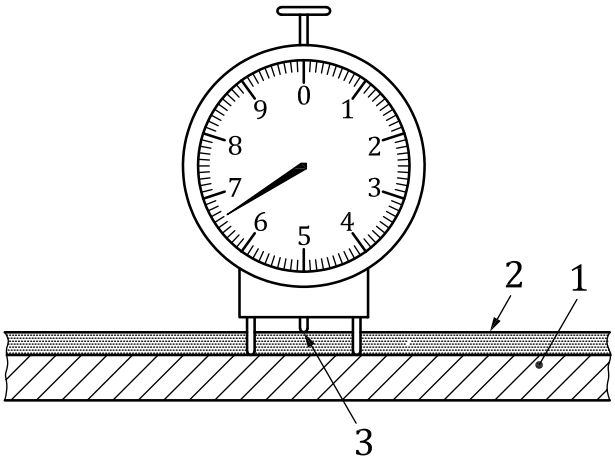

a) Example of an analogue dial gauge

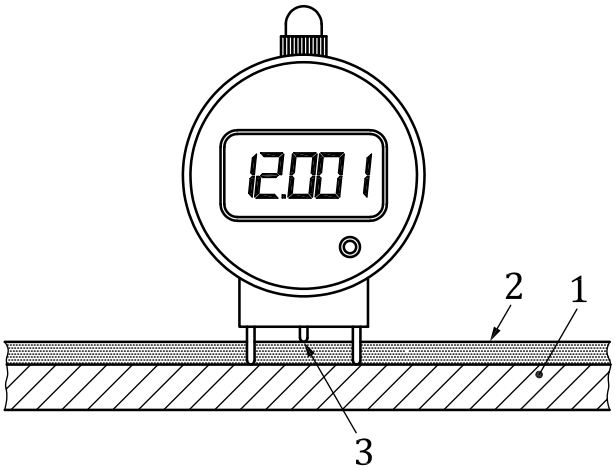

b) Example of a digital dial gauge

Key

1 substrate

2 coating

3 plunger

Figure 3 — Examples of an analogue and a digital dial gauge

4.2.6.1.2 Reference material for zeroing the gauge

A flat reference plate is required for zeroing the gauge. The reference plate shall be a polished glass plate.

4.2.6.2 Procedure

Zero the dial gauge on the reference plate with the measuring tip adjusted so that it is just touching the plate.

Screw the plunger back from the zeroing position.

© ISO 2019 – All rights reserved
Documents
Document Sharing Hub
Full document details: BS EN ISO 2808:2019

Place the contact pins of the dial gauge on the specimen so that they are perpendicular to the surface of the substrate and carefully lower the plunger down until the measuring tip is just touching the coating material.

In the case of specimens curved in a single plane, the plungers shall be placed in position parallel to the axis of curvature.

The thickness shall be measured directly after application since the result will be influenced, for example, by physical drying, curing or solvent loss.

Read the wet-film thickness directly from the gauge.

4.3 Gravimetric method

4.3.1 Principle

A coating is applied and the thickness is determined by dividing the mass of the coating by its density and by the coated surface area.

The wet-film thickness, t_w, in micrometres, is calculated with Formula (1)

$$t_w = \frac{m - m_0}{A \cdot \rho} \tag{1}$$

where

m_0 is the mass of the uncoated specimen, in grams;

m is the mass of the coated specimen, in grams;

A is the coated surface area, in square metres;

ρ is the density of the liquid coating material applied, in grams per cubic centimetres.

NOTE The density of the liquid coating material applied can be determined in accordance with ISO 2811-1, ISO 2811-2, ISO 2811-3 or ISO 2811-4.

4.3.2 Field of application

The gravimetric principle is generally applicable, provided that the amount of highly volatile substances in the liquid coating material is low.

4.3.3 General

Determination using the gravimetric principle yields the mean wet-film thickness over the entire coated surface area. With spray application in particular, the reverse side of the specimen shall be masked to prevent measurement errors resulting from partial coating of the reverse (overspray). Any masking of the reverse side shall be removed before weighing the coated specimen.

4.3.4 Method 2 — By difference in mass

4.3.4.1 Apparatus

Required are scales capable of weighing up to 500 g to the nearest 1 mg.

4.3.4.2 Procedure

Weigh the specimen first uncoated and then coated and calculate the wet-film thickness using Formula (1).

© ISO 2019 – All rights reserved

AVA Documents Document Sharing Hub
Full document details: BS EN ISO 2808:2019

4.4 Photothermal method

4.4.1 Principle

The film thickness is determined from the difference between the time a thermal wave is radiated towards the coating and the time the re-emitted wave (either heat or ultrasonic) is detected (see Figure 4).

Irrespective of the type of excitation involved or the method of detection, all photothermal methods use the same principle: the periodic or pulsed introduction of energy in the form of heat into a specimen and the subsequent detection of the local temperature increase.

The time difference measured is compared against values obtained with the instrument for films of known thickness under fixed conditions (excitation energy, pulse length, excitation frequency, etc.) (see 4.4.4.2).

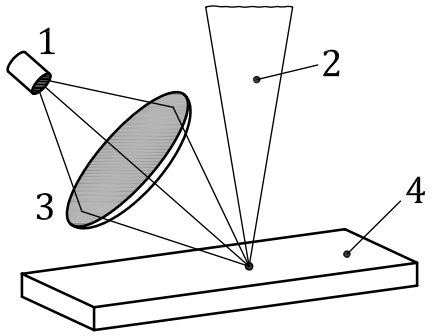

Key

1 infrared detector

2 excitation beam

3 thermal radiation

4 specimen

Figure 4 — Representation of radiometric detection

4.4.2 Field of application

The photothermal principle is basically suitable for all film-substrate combinations. It can also be used to determine the thicknesses of the individual layers in a multilayer coating, provided the layers are sufficiently distinct from each other with respect to their thermal conductivity and reflection properties.

The required minimum substrate thickness is a function of the measurement system used (see 4.4.4.1.1) and the film-substrate combination.

4.4.3 General

Classification of the method as destructive or non-destructive depends on the purpose of the coating. The thermal energy absorbed by the coating could have an impact on the coating owing to the local heating effect produced.

© ISO 2019 – All rights reserved
Documents
Document Sharing Hub
Full document details: BS EN ISO 2808:2019