BS EN ISO 3691-2:2023

BSI Standards Publication

Industrial trucks — Safety requirements and verification

Part 2: Self-propelled variable-reach trucks

Documents
Document Sharing Hub

Full document details: BS EN ISO 3691-2:2023

National foreword

This British Standard is the UK implementation of EN ISO 3691-2:2023. It is identical to ISO 3691-2:2023. It supersedes BS EN ISO 3691-2:2016 which is withdrawn.

The UK participation in its preparation was entrusted to Technical Committee MHE/7, Industrial trucks.

A list of organizations represented on this committee can be obtained on request to its committee manager.

Contractual and legal considerations

This publication has been prepared in good faith, however no representation, warranty, assurance or undertaking (express or implied) is or will be made, and no responsibility or liability is or will be accepted by BSI in relation to the adequacy, accuracy, completeness or reasonableness of this publication. All and any such responsibility and liability is expressly disclaimed to the full extent permitted by the law.

This publication is provided as is, and is to be used at the recipient's own risk.

The recipient is advised to consider seeking professional guidance with respect to its use of this publication.

This publication is not intended to constitute a contract. Users are responsible for its correct application.

© The British Standards Institution 2023
Published by BSI Standards Limited 2023

ISBN 978 0 539 15180 0

ICS 53.060

Compliance with a British Standard cannot confer immunity from legal obligations.

This British Standard was published under the authority of the Standards Policy and Strategy Committee on 31 March 2023.

Amendments/corrigenda issued since publication

Date	Text affected

Documents
Document Sharing Hub

Full document details: BS EN ISO 3691-2:2023

EUROPEAN STANDARD

NORME EUROPÉENNE

EUROPÄISCHE NORM

EN ISO 3691-2

March 2023

ICS 53.060

Supersedes EN ISO 3691-2:2016

English Version

Industrial trucks - Safety requirements and verification - Part 2: Self-propelled variable-reach trucks (ISO 3691-2:2023)

Chariots de manutention - Exigences de sécurité et vérification - Partie 2: Chariots automoteurs à portée variable (ISO 3691-2:2023)

Sicherheit von Flurförderzeugen - Sicherheitsanforderungen und Verifizierung - Teil 2: Motorkraftbetriebene Flurförderzeuge mit veränderlicher Reichweite (ISO 3691-2:2023)

This European Standard was approved by CEN on 9 January 2023.

CEN members are bound to comply with the CEN/CENELEC Internal Regulations which stipulate the conditions for giving this European Standard the status of a national standard without any alteration. Up-to-date lists and bibliographical references concerning such national standards may be obtained on application to the CEN-CENELEC Management Centre or to any CEN member.

This European Standard exists in three official versions (English, French, German). A version in any other language made by translation under the responsibility of a CEN member into its own language and notified to the CEN-CENELEC Management Centre has the same status as the official versions.

CEN members are the national standards bodies of Austria, Belgium, Bulgaria, Croatia, Cyprus, Czech Republic, Denmark, Estonia, Finland, France, Germany, Greece, Hungary, Iceland, Ireland, Italy, Latvia, Lithuania, Luxembourg, Malta, Netherlands, Norway, Poland, Portugal, Republic of North Macedonia, Romania, Serbia, Slovakia, Slovenia, Spain, Sweden, Switzerland, Türkiye and United Kingdom.

EUROPEAN COMMITTEE FOR STANDARDIZATION
COMITÉ EUROPÉEN DE NORMALISATION
EUROPÄISCHES KOMITEE FÜR NORMUNG

CEN-CENELEC Management Centre: Rue de la Science 23, B-1040 Brussels

© 2023 CEN All rights of exploitation in any form and by any means reserved worldwide for CEN national Members.

Ref. No. EN ISO 3691-2:2023 E

Documents
Document Sharing Hub

Full document details: BS EN ISO 3691-2:2023

European foreword

This document (EN ISO 3691-2:2023) has been prepared by Technical Committee ISO/TC 110 "Industrial trucks" in collaboration with Technical Committee CEN/TC 150 “Industrial Trucks - Safety” the secretariat of which is held by BSI.

This European Standard shall be given the status of a national standard, either by publication of an identical text or by endorsement, at the latest by September 2023, and conflicting national standards shall be withdrawn at the latest by September 2024.

Attention is drawn to the possibility that some of the elements of this document may be the subject of patent rights. CEN shall not be held responsible for identifying any or all such patent rights.

This document supersedes EN ISO 3691-2:2016.

This document is intended to be used with EN 16307-2:2023.

Any feedback and questions on this document should be directed to the users’ national standards body/national committee. A complete listing of these bodies can be found on the CEN website.

According to the CEN-CENELEC Internal Regulations, the national standards organizations of the following countries are bound to implement this European Standard: Austria, Belgium, Bulgaria, Croatia, Cyprus, Czech Republic, Denmark, Estonia, Finland, France, Germany, Greece, Hungary, Iceland, Ireland, Italy, Latvia, Lithuania, Luxembourg, Malta, Netherlands, Norway, Poland, Portugal, Republic of North Macedonia, Romania, Serbia, Slovakia, Slovenia, Spain, Sweden, Switzerland, Türkiye and the United Kingdom.

Endorsement notice

The text of ISO 3691-2:2023 has been approved by CEN as EN ISO 3691-2:2023 without any modification.

Documents
Document Sharing Hub

Full document details: BS EN ISO 3691-2:2023

Contents

Page

Foreword ... **v**
Introduction ... **vi**
1 Scope ... **1**
2 Normative references ... **2**
3 Terms and definitions ... **3**
4 Safety requirements and/or protective measures ... **5**
4.1 General ... 5
4.1.1 Overall requirements ... 5
4.1.2 Normal climatic conditions ... 5
4.1.3 Normal operating conditions ... 6
4.1.4 Sharp edges ... 6
4.1.5 Electrical requirements ... 6
4.1.6 Stored energy components ... 6
4.2 Starting/moving ... 6
4.2.1 Unauthorized starting ... 6
4.2.2 Unintended movement and inadvertent activation ... 6
4.3 Brakes ... 7
4.3.1 General ... 7
4.3.2 Failure of energy supply ... 7
4.4 Manual control actuator ... 7
4.4.1 General ... 7
4.4.2 Travel and braking controls ... 8
4.4.3 Steering controls ... 9
4.4.4 Load-handling controls ... 9
4.4.5 Other controls ... 9
4.4.6 Marking ... 10
4.5 Power systems and accessories ... 10
4.5.1 Exhaust system ... 10
4.5.2 Cooling system ... 10
4.5.3 Fuel tanks ... 10
4.5.4 Access to engine and other compartments ... 10
4.5.5 Liquefied petroleum gas (LPG)-powered trucks ... 11
4.6 Systems for telescoping, lifting and tilting ... 13
4.6.1 Lift chains ... 13
4.6.2 Hydraulic lifting, telescoping and carriage tilting ... 14
4.6.3 Hydraulic systems ... 14
4.6.4 Fork arms ... 15
4.6.5 Fork-arm extensions ... 15
4.6.6 Fork carriers ... 15
4.6.7 Load-handling attachments ... 15
4.7 Operator positions ... 16
4.7.1 Dimensions ... 16
4.7.2 Operator's seat ... 16
4.7.3 Operator restraint ... 17
4.7.4 Operator access and egress ... 17
4.7.5 Protection from road wheels and objects thrown up by the wheels ... 17
4.7.6 Protection from burning ... 17
4.7.7 Protection against crushing, shearing and trapping ... 18
4.8 Stability ... 18
4.8.1 General ... 18
4.8.2 Specific operating conditions ... 18
4.8.3 Longitudinal stability determination ... 19
4.9 Protective devices ... 19

AVA Documents
Document Sharing Hub

© ISO 2023 – All rights reserved

Full document details: BS EN ISO 3691-2:2023

4.9.1 Overhead guard 19
4.9.2 Load backrest extension 19
4.9.3 Roll-over protective structures (ROPSs) 19
4.9.4 Warning device 19
4.9.5 Starter battery requirements 20
4.10 Visibility and lighting 20
4.10.1 Visibility 20
4.10.2 Lighting 20
4.11 Operator's cab 20
4.11.1 General 20
4.11.2 Doors and windows 20
4.11.3 Fire resistance 21
4.11.4 Ventilation 21
4.11.5 Heating, air conditioning and ventilation system 21
4.11.6 Demisting and defrosting 22
4.11.7 Pressurization system 22
4.11.8 Wipers and washers 22
4.11.9 Access and an emergency exit 23
4.11.10 Storage of instruction handbook 23
4.11.11 Additional operator's position 23
4.12 Provisions for transportation of the truck and removable attachments 23
4.13 Environmental requirements 23
4.13.1 Noise emissions 23
4.13.2 Vibration 23
4.13.3 Electromagnetic compatibility (EMC) 24
4.14 Devices for towing 24

5 Verification of safety requirements and/or protective measures 24
5.1 General 24
5.2 Structural verification 24
5.2.1 Test loads 24
5.2.2 Static test 25
5.2.3 Dynamic test 25
5.3 Functional verification 25

6 Information for use 26
6.1 General 26
6.2 Instruction handbook 26
6.2.1 Truck 26
6.2.2 Operation of truck 26
6.2.3 Details for battery-powered trucks 27
6.2.4 Details for internal-combustion-engine-powered trucks 28
6.2.5 Service and maintenance 28
6.2.6 Transportation, commissioning and storage 28
6.2.7 Truck modification 29
6.3 Marking 29
6.3.1 Information plates 29
6.3.2 Load chart 30
6.3.3 Information plate for trucks operating in special conditions 32
6.3.4 Other information 33
6.3.5 Languages 33
6.3.6 Operator restraint 33

Annex A (informative) **Rated capacity of truck 34**

Annex B (informative) **List of significant hazards 37**

Annex C (normative) **Verification of essential health and safety requirements 42**

Bibliography 46

© ISO 2023 – All rights reserved

Documents
Document Sharing Hub
Full document details: BS EN ISO 3691-2:2023

Foreword

ISO (the International Organization for Standardization) is a worldwide federation of national standards bodies (ISO member bodies). The work of preparing International Standards is normally carried out through ISO technical committees. Each member body interested in a subject for which a technical committee has been established has the right to be represented on that committee. International organizations, governmental and non-governmental, in liaison with ISO, also take part in the work. ISO collaborates closely with the International Electrotechnical Commission (IEC) on all matters of electrotechnical standardization.

The procedures used to develop this document and those intended for its further maintenance are described in the ISO/IEC Directives, Part 1. In particular, the different approval criteria needed for the different types of ISO documents should be noted. This document was drafted in accordance with the editorial rules of the ISO/IEC Directives, Part 2 (see www.iso.org/directives).

Attention is drawn to the possibility that some of the elements of this document may be the subject of patent rights. ISO shall not be held responsible for identifying any or all such patent rights. Details of any patent rights identified during the development of the document will be in the Introduction and/or on the ISO list of patent declarations received (see www.iso.org/patents).

Any trade name used in this document is information given for the convenience of users and does not constitute an endorsement.

For an explanation of the voluntary nature of standards, the meaning of ISO specific terms and expressions related to conformity assessment, as well as information about ISO's adherence to the World Trade Organization (WTO) principles in the Technical Barriers to Trade (TBT), see www.iso.org/iso/foreword.html.

This document was prepared by Technical Committee ISO/TC 110, *Industrial trucks*, Subcommittee SC 2, *Safety of powered industrial trucks,* in collaboration with the European Committee for Standardization (CEN) Technical Committee CEN/TC 150, *Industrial trucks - Safety,* in accordance with the Agreement on technical cooperation between ISO and CEN (Vienna Agreement).

This second edition cancels and replaces the first edition (ISO 3691-2:2016), which has been technically revised.

The main changes are as follows:

— exclusions and limitations in the Scope have been clarified;

— references for European regional requirements have been updated;

— requirements defining the normal operator position necessary in order for the controls to function have been added;

— operator weight has been updated;

— information relating to truck modification has been updated;

— verification methods have been added as a new Annex C.

A list of all parts in the ISO 3691 series can be found on the ISO website.

Any feedback or questions on this document should be directed to the user's national standards body. A complete listing of these bodies can be found at www.iso.org/members.html.

© ISO 2023 – All rights reserved

Documents
Document Sharing Hub
Full document details: BS EN ISO 3691-2:2023

Introduction

This document is a type-C standard as stated in ISO 12100.

This document is of relevance, in particular, for the following stakeholder groups representing the market players with regard to machinery safety:

— machine manufacturers (small, medium and large enterprises);

— health and safety bodies (regulators, accident prevention organisations, market surveillance etc.).

Others can be affected by the level of machinery safety achieved with the means of the document by the above-mentioned stakeholder groups:

— machine users/employers (small, medium and large enterprises);

— machine users/employees (e.g. trade unions, organizations for people with special needs);

— service providers, e. g. for maintenance (small, medium and large enterprises);

— consumers (in case of machinery intended for use by consumers).

The above-mentioned stakeholder groups have been given the possibility to participate at the drafting process of this document.

The machinery concerned and the extent to which hazards, hazardous situations or hazardous events are covered are indicated in the Scope of this document.

When requirements of this type-C standard are different from those which are stated in type-A or type-B standards, the requirements of this type-C standard take precedence over the requirements of the other standards for machines that have been designed and built according to the requirements of this type-C standard.

The ISO 3691 series covers safety requirements and their verification for industrial trucks as defined in ISO 5053-1.

This document does not repeat all the technical rules which are state-of-the-art and which are applicable to the material used to construct the industrial truck. Reference will also need to be made to ISO 12100.

© ISO 2023 – All rights reserved
Documents
Document Sharing Hub
Full document details: BS EN ISO 3691-2:2023

Industrial trucks — Safety requirements and verification —

Part 2: Self-propelled variable-reach trucks

1 Scope

This document gives safety requirements and the means for their verification for self-propelled industrial variable-reach trucks and variable-reach container handlers/reach stackers as defined in ISO 5053-1 (hereafter referred to as trucks), equipped with forks or integral load-handling devices for normal industrial duties (e.g. fork arms or means, such as spreaders, for handling containers).

This document does not apply to:

— rough-terrain variable-reach trucks,

— rough-terrain variable-reach trucks for handling containers,

— lorry mounted trucks covered by ISO 20297-1,

— machines designed primarily for earth-moving (e.g. loaders and dozers), even when their buckets and blades are replaced with forks,

— machines from which the load can swing freely in all directions.

This document is not applicable to trucks manufactured before the date of its publication.

For the purposes of this document, fork arms and integrated attachments are considered to be a part of the truck, whereas attachments/equipment/tools mounted on the load carrier or on the fork arms which are removable by the user are not. Nevertheless, for interchangeable equipment, which is assembled with the truck by the operator in order to change the function of, or attribute a new function to, the truck, this document does provide requirements for:

— the interface with the truck,

— protection of the operator in the normal operating position from crushing and shearing hazards,

— operating and maintenance instructions,

— load charts,

— marking,

— provision for transportation, and,

— indicator lights for attachments for lifting containers

Any regional requirements additional to the provisions of this document are addressed in EN 16307-2:2023 and ISO/TS 3691-8.

This document deals with all significant hazards, hazardous situations or hazardous events, as listed in Annex B, with the exception of the following, relevant to the applicable machines when used as intended and under conditions of misuse which are reasonably foreseeable by the manufacturer.

© ISO 2023 – All rights reserved

Documents
Document Sharing Hub
Full document details: BS EN ISO 3691-2:2023

It does not establish requirements for hazards that can occur:

— during construction;

— when using trucks on public roads;

— when operating in potentially explosive atmospheres;

— when lifting persons; or

— during dismantling, disabling and scrapping.

This document does not provide requirements for:

— tools, lifting accessories or removeable attachments, which do not change the function or attribute a new function, mounted on the load carrier or fork arms;

— attachments/equipment mounted on the load carrier or on the fork arms which are removable by the user and which change the function or attribute a new function, except as stated above;

— the reliability of control systems and performance requirements for safety related parts of control systems; or

— the requirement for fitting an enclosed cab, whether pressurized or not.

2 Normative references

The following documents are referred to in the text in such a way that some or all of their content constitutes requirements of this document. For dated references, only the edition cited applies. For undated references, the latest edition of the referenced document (including any amendments) applies.

ISO 2328:2011, *Fork-lift trucks — Hook-on type fork arms and fork arm carriages — Mounting dimensions*

ISO 2330:2002, *Fork-lift trucks — Fork arms — Technical characteristics and testing*

ISO 2867:2011, *Earth-moving machinery — Access systems*

ISO 3287:1999, *Powered industrial trucks — Symbols for operator controls and other displays*

ISO 3411:2007, *Earth-moving machinery — Physical dimensions of operators and minimum operator space envelope*

ISO 3795:1989, *Road vehicles, and tractors and machinery for agriculture and forestry — Determination of burning behaviour of interior materials*

ISO 4413:2010, *Hydraulic fluid power — General rules and safety requirements for systems and their components*

ISO 5053-1:2020, *Industrial trucks — Vocabulary — Part 1: Types of industrial trucks*

ISO 5053-2:2019, *Industrial trucks — Vocabulary — Part 2: Fork arms and attachments*

ISO 5353:1995, *Earth-moving machinery, and tractors and machinery for agriculture and forestry — Seat index point*

ISO 6055:2004, *Industrial trucks — Overhead guards — Specification and testing*

ISO 6292:2020, *Powered industrial trucks and tractors — Brake performance and component strength*

ISO 10263-3:2009, *Earth-moving machinery — Operator enclosure environment — Part 3: Pressurization test method*

© ISO 2023 – All rights reserved
Documents
Document Sharing Hub
Full document details: BS EN ISO 3691-2:2023

ISO 10263-4:2009, *Earth-moving machinery — Operator enclosure environment — Part 4: Heating, ventilating and air conditioning (HVAC) test method and performance*

ISO 12100:2010, *Safety of machinery — General principles for design — Risk assessment and risk reduction*

ISO 13284:2022, *Industrial trucks — Fork arm extensions and telescopic fork arms — Technical characteristics and strength requirements*

ISO 13564-1:2012, *Powered industrial trucks — Test methods for verification of visibility — Part 1: Sit-on and stand-on operator trucks and variable-reach trucks up to and including 10 t capacity*

ISO 15870:2000, *Powered industrial trucks — Safety signs and hazard pictorials — General principles*

ISO 15871:2019, *Industrial trucks — Specifications for indicator lights for container handling and grappler arm operations*

ISO 21281:2005, *Construction and layout of pedals of self-propelled sit-down rider-controlled industrial trucks — Rules for the construction and layout of pedals*

ISO 22915-10:2008, *Industrial trucks — Verification of stability — Part 10: Additional stability test for trucks operating in the special condition of stacking with load laterally displaced by powered devices*

ISO 22915-11:2011, *Industrial trucks — Verification of stability — Part 11: Industrial variable-reach trucks*

ISO 22915-12:2015, *Industrial trucks — Verification of stability — Part 12: Industrial variable-reach trucks handling freight containers of 6 m (20 ft) length and longer*

ISO 22915-20:2008, *Industrial trucks — Verification of stability — Part 20: Additional stability test for trucks operating in the special condition of offset load, offset by utilization*

ISO 24135-1:2006, *Industrial trucks — Specifications and test methods for operator restraint systems — Part 1: Lap-type seat belts*

3 Terms and definitions

For the purposes of this document, the terms and definitions given in ISO 5053-1:2020, ISO 5053-2:2019 and ISO 12100:2010 and the following apply.

ISO and IEC maintain terminology databases for use in standardization at the following addresses:

— ISO Online browsing platform: available at https://www.iso.org/obp

— IEC Electropedia: available at https://www.electropedia.org/

3.1
self-propelled industrial variable-reach truck
seated-rider-operated, counterbalanced lift truck with one or more articulated arms [telescopic, non-slewing (3.13)] used for stacking loads and for operation on smooth, level, prepared and consolidated surfaces

3.2
actual capacity at maximum lift height with forks
maximum load, Q_2, in kg, specified by the manufacturer that the truck is capable of lifting to its maximum height in normal operating conditions

Note 1 to entry: This is equal to the maximum load, with centre of gravity, *G* (see Figure A.1), carried on the fork arms at the standard load centre distance, *D*, as specified in Annex A, and with the *boom* (3.7) adjusted to its maximum height.

© ISO 2023 – All rights reserved

Documents
Document Sharing Hub
Full document details: BS EN ISO 3691-2:2023

3.3
actual capacity at container position with spreader
maximum load, *Q*, in kg, with row, *d,* and height, *h*, specified by the manufacturer that the truck is capable of lifting to its maximum height in normal operating conditions

3.4
axle locking
mechanism designed to stop oscillation of the rear axle so as to improve truck stability

3.5
stabilizer
extendable or pivoting mechanical supports used to improve stability of a stationary truck

3.6
lateral levelling
act of changing the angular relationship between the *boom* (3.7) pivot and the ground in order to adjust the boom pivot to horizontal when the truck is standing on a side slope

Note 1 to entry: Used to ensure that the boom operates in a vertical plane.

3.7
boom
pivoting support member providing radial and telescoping (if equipped) movement of the load-engaging means

3.8
spreader
device fitted to the *boom* (3.7), designed to connect the lifting points of freight containers, swap bodies and semi-trailers

Note 1 to entry: This can include powered devices used to connect the lifting points of the load and an articulated mechanism to facilitate engagement.

3.9
overhead guard
device fitted to the truck for the purpose of protecting the operator against falling objects

3.10
load backrest
portion of the fork carriage serving to restrain the load when the load is tilted rearward or upward

3.11
normal operating position
position in which the operator is able to control all functions for driving and load handling as specified by the manufacturer

Note 1 to entry: Additional positions may be specified by the manufacturer if it is not possible to control all the functions of the truck from a single position. A rotating seat or stand-up end-control truck with more than one operating direction is considered as being or having a single operating position.

3.12
fork carrier
device fitted at the end of the *boom* (3.7) to connect and lock interchangeable attachments without the use of a tool

3.13
non-slewing
having a slewing movement not greater than 5° on either side of the longitudinal axis of the truck

Note 1 to entry: See Figure 1.

© ISO 2023 – All rights reserved
Documents
Document Sharing Hub
Full document details: BS EN ISO 3691-2:2023

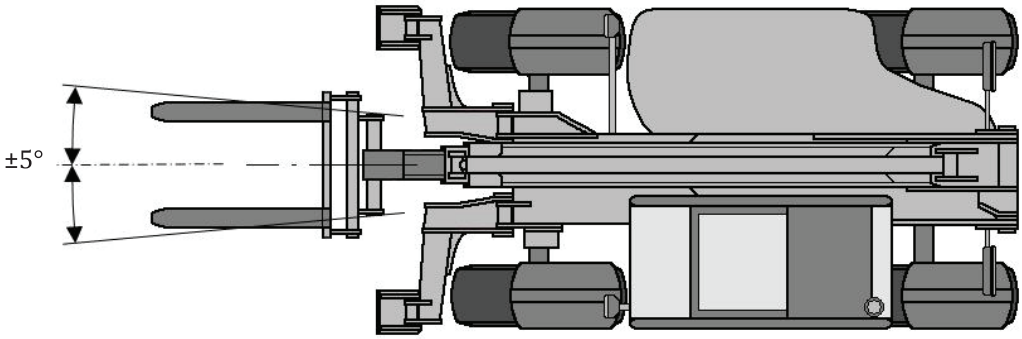

Figure 1 — Slewing movement ≤ 5° (non-slewing)

3.14
rated capacity with fork arms
load, Q_1, in kg, permitted by the manufacturer, that the truck type is capable of transporting and lifting in normal operating conditions with the *boom* (3.7) fully retracted

Note 1 to entry: For centre of gravity, *G*.

Note 2 to entry: The rated capacity is used to compare the capacity of different manufacturers' trucks and to provide the break points used in technical standards and statistics. The operating limits for the truck are defined by the *actual capacity* (3.2, 3.3).

3.15
rated capacity with spreader
load, Q_1, in kg, permitted by the manufacturer, that the truck type is capable of transporting and lifting in normal operating conditions with the *spreader* (3.8) in the position of the first container row at measurement d_1 and lift height 6,5 m

Note 1 to entry: For the second container, see Figure A.2.

4 Safety requirements and/or protective measures

4.1 General

4.1.1 Overall requirements

The truck shall conform to the safety requirements and/or protective measures of this clause.

In addition, the truck shall be designed according to the principles of ISO 12100:2010 for relevant but not significant hazards which are not dealt with by this document.

4.1.2 Normal climatic conditions

For truck operation, the following climatic conditions apply:

— average ambient temperature for continuous duty: +25 °C;

— maximum ambient temperature, short term (up to 1 h): +40 °C;

— lowest ambient temperature for trucks intended for use in normal indoor conditions: +5 °C;

— lowest ambient temperature for trucks intended for use in normal outdoor conditions: −20 °C;

— altitude: up to 2 000 m.

© ISO 2023 – All rights reserved

Documents
Document Sharing Hub
Full document details: BS EN ISO 3691-2:2023

4.1.3 Normal operating conditions

Normal operating conditions are the following:

— driving (travelling and lifting) on substantially firm, smooth, level and consolidated surfaces — the surface conditions on which the truck is designed to operate shall be specified in the instruction handbook (see 6.2);

— driving with the horizontal load centre of gravity approximately on the longitudinal centre plane of the truck;

— travelling with the boom retracted and, if fork arms are fitted, with these tilted backwards and both with and without a load, the load in the designated travel position.

If the above is not sufficient to allow the conditions for stability of a particular truck type to be specified, then the operating conditions shall be according to the International Standards referenced for stability in 4.8.

4.1.4 Sharp edges

There shall be no sharp edges or angles posing a hazard in the area of the operator in the normal operating position or in the area of access and egress during normal operation and daily checks.

NOTE For guidance, see ISO 12508.

4.1.5 Electrical requirements

Electrical requirements can be subject to regional requirements. See EN 16307-2:2023 and ISO/TS 3691-8:2019.

4.1.6 Stored energy components

Components which store energy and that would cause a risk during removal or disassembly, for example hydraulic accumulator or spring-applied brakes, shall be provided with a means to release the energy before removal or disassembly.

4.2 Starting/moving

4.2.1 Unauthorized starting

Trucks shall be provided with a device (e.g. key, code, magnetic card) which prevents starting without its use.

4.2.2 Unintended movement and inadvertent activation

4.2.2.1 General

Truck movement from the holding position, other than by actuation of the controls by the operator, due to drift or creep (e.g. by leakage), shall not occur.

4.2.2.2 Parking brake

A parking brake shall be provided complying with 4.3.1.

Failure of the control system of an automatically applied parking brake shall be indicated to the operator.

© ISO 2023 – All rights reserved
Documents
Document Sharing Hub
Full document details: BS EN ISO 3691-2:2023

4.2.2.3 Internal-combustion engine powered trucks

Internal-combustion engine powered trucks shall be fitted with a device which prevents the engine being started while the transmission is engaged.

4.2.2.4 Travel controls

Travel controls shall be so arranged that on level ground the truck will not move from rest until the transmission has been engaged.

4.2.2.5 Powered travel movement

Powered travel movement shall be possible only if the operator is in the normal operating position.

An interlock activated by a device that detects if the operator is not in the seated position satisfies this requirement.

When the truck is stationary, powered travel shall not occur automatically when the operator returns to the normal operating position without an additional operation (e.g. by requiring a resetting of the direction control or reactivation of the speed control).

4.3 Brakes

4.3.1 General

All industrial trucks shall be designed with service and parking brakes. Brakes shall conform to ISO 6292:2020.

The parking brake shall be equipped with a system preventing unintentional release. The parking brake force shall be applied by mechanical means.

Braking requirements can be subject to regional requirements, additional to the requirements of this document. See ISO/TS 3691-8:2019.

For sit-down rider trucks, the parking brake system shall be manually operable from the normal operating position or automatically applied by leaving the normal operating position.

Trucks with only non-automatically applied parking brake(s) shall have a warning to the operator to apply brakes before leaving the truck.

4.3.2 Failure of energy supply

In the event of a failure of the energy supply, the service brake shall be able to bring the truck to a controlled stop.

4.4 Manual control actuator

4.4.1 General

4.4.1.1 Location

The controls shall be confined within the plan view outline of the truck's overhead guard or falling object protective structure (FOPS).

NOTE See ISO 6682 for guidance on zones of comfort and reach for operator controls.

© ISO 2023 – All rights reserved

Documents
Document Sharing Hub
Full document details: BS EN ISO 3691-2:2023

4.4.1.2 Consistency with the truck motions

Movement of the controls shall be consistent with the motions of the truck being operated wherever practicable.

4.4.1.3 Multiple operators

If additional operating positions are fitted, for example for more than one operator, the operation of the controls shall only be possible from one operating position at a time, excepting the emergency disconnect switch in accordance with 4.1.5, which shall be operable from all positions.

4.4.1.4 Multiple operating positions

If more than one operating position is fitted for a single operator, the use of the controls for one of these operating positions shall preclude the use of the controls of another operating position. The exception to this is the emergency disconnect switch in accordance with 4.1.5, which shall be operable from all positions.

4.4.2 Travel and braking controls

4.4.2.1 General

The motion of the speed operating control shall be so designed that an increase in the movement of the control increases the travel speed. When the control is released, it shall return to the neutral position of the control actuator.

4.4.2.2 Pedal-operated travel and braking controls

Trucks with pedal-operated travel and braking controls shall conform to ISO 21281:2005.

4.4.2.3 Differential locking pedal

If the truck is equipped with a pedal-operated differential lock, depressing the pedal shall lock the differential.

If the truck is equipped with a differential lock which is engaged by other means (e.g. switch or hand lever), the engaged and disengaged positions shall be clearly marked.

4.4.2.4 Hand-operated direction control lever

The movement of a direction control lever shall correspond to the required direction of travel.

4.4.2.5 Hand-operated accelerator control

The control lever shall be a hold-to-run control: on release of the control, its movement shall return to minimum speed position. Movement of the control lever to front or clockwise shall increase speed.

4.4.2.6 Hand-operated transmission gear change lever

The positions for gear engagement shall be clearly identified.

© ISO 2023 – All rights reserved
Documents
Document Sharing Hub
Full document details: BS EN ISO 3691-2:2023

4.4.3 Steering controls

4.4.3.1 Steering direction

The following applies.

a) For trucks with a steering-wheel control, clockwise rotation of a steering wheel shall steer the truck to the right when the truck is travelling in the forward direction.

b) On trucks with a crab-steer mode (all wheels on the truck turn in the same direction), clockwise rotation of the steering wheel shall move the truck to the right when the truck is travelling in the forward direction and to the left when travelling in the reverse direction.

c) On trucks where the steering is controlled by means of a single lever controller, moving the lever to the right shall cause the truck to be steered to the right when the truck is travelling in the forward direction. If a reversible control unit or dual controls are fitted, moving the lever to the right shall also steer the truck to the operator's right when the truck is travelling in reverse with the operator facing in that direction.

4.4.3.2 Failure of power supply

In the event of an interruption of the power supplied to the steering system (including a dead motor or engine) it shall be possible to maintain the path being steered until the truck is brought to a controlled stop.

4.4.4 Load-handling controls

4.4.4.1 Controls

Controls shall return to neutral when released and stop load movements.

The controls for the load-handling functions shall be considered as a primary control, located within ergonomic reach of the operator and separated from the driving controls.

Trucks equipped with attachments which hold the load by power (e.g. paper clamp) shall feature control(s) with a secondary action, or other means, to prevent unintentional release of the load.

4.4.4.2 Multi-function controls

Where a control is designed and constructed to perform more than one function, each separate function shall be clearly marked. Each control function shall return to the neutral position when released and stop the corresponding load movement.

4.4.5 Other controls

4.4.5.1 Stabilizer control

For trucks equipped with stabilizers, a forward or downward motion of the control shall lower the stabilizer, and a rearward or upward motion shall raise the stabilizer.

Where independent or selectable controls for stabilizers are provided, the left control shall operate the left stabilizer and the right control shall operate the right stabilizer. If selectable controls are provided, a middle position may operate both stabilizers.

If other control methods are used, they shall follow the same logic.

© ISO 2023 – All rights reserved

Documents
Document Sharing Hub
Full document details: BS EN ISO 3691-2:2023