BS EN ISO 5360:2016

BSI Standards Publication

Anaesthetic vaporizers — Agent-specific filling systems

bsi.

...making excellence a habit.™

Document Sharing Hub

National foreword

This British Standard is the UK implementation of EN ISO 5360:2016. It supersedes BS EN ISO 5360:2012 which is withdrawn.

The UK participation in its preparation was entrusted to Technical Committee CH/121, Anaesthetic and respiratory equipment.

A list of organizations represented on this committee can be obtained on request to its secretary.

This publication does not purport to include all the necessary provisions of a contract. Users are responsible for its correct application.

© The British Standards Institution 2016.
Published by BSI Standards Limited 2016

ISBN 978 0 580 89578 4

ICS 11.040.10

Compliance with a British Standard cannot confer immunity from legal obligations.

This British Standard was published under the authority of the Standards Policy and Strategy Committee on 31 March 2016.

Amendments issued since publication

Date	Text affected

Documents
Document Sharing Hub

Full document details: BS EN ISO 5360:2016

EUROPEAN STANDARD

NORME EUROPÉENNE

EUROPÄISCHE NORM

EN ISO 5360

March 2016

ICS 11.040.10

Supersedes EN ISO 5360:2012

English Version

Anaesthetic vaporizers - Agent-specific filling systems (ISO 5360:2016)

Évaporateurs d'anesthésie - Systèmes de remplissage spécifiques à l'agent (ISO 5360:2016)

Anästhesiemittelverdampfer - Substanzspezifische Füllsysteme (ISO 5360:2016)

This European Standard was approved by CEN on 7 November 2015.

CEN members are bound to comply with the CEN/CENELEC Internal Regulations which stipulate the conditions for giving this European Standard the status of a national standard without any alteration. Up-to-date lists and bibliographical references concerning such national standards may be obtained on application to the CEN-CENELEC Management Centre or to any CEN member.

This European Standard exists in three official versions (English, French, German). A version in any other language made by translation under the responsibility of a CEN member into its own language and notified to the CEN-CENELEC Management Centre has the same status as the official versions.

CEN members are the national standards bodies of Austria, Belgium, Bulgaria, Croatia, Cyprus, Czech Republic, Denmark, Estonia, Finland, Former Yugoslav Republic of Macedonia, France, Germany, Greece, Hungary, Iceland, Ireland, Italy, Latvia, Lithuania, Luxembourg, Malta, Netherlands, Norway, Poland, Portugal, Romania, Slovakia, Slovenia, Spain, Sweden, Switzerland, Turkey and United Kingdom.

EUROPEAN COMMITTEE FOR STANDARDIZATION
COMITÉ EUROPÉEN DE NORMALISATION
EUROPÄISCHES KOMITEE FÜR NORMUNG

CEN-CENELEC Management Centre: Avenue Marnix 17, B-1000 Brussels

© 2016 CEN All rights of exploitation in any form and by any means reserved worldwide for CEN national Members.

Ref. No. EN ISO 5360:2016 E

Documents
Document Sharing Hub

Full document details: BS EN ISO 5360:2016

European foreword

This document (EN ISO 5360:2016) has been prepared by Technical Committee ISO/TC 121 "Anaesthetic and respiratory equipment" in collaboration with Technical Committee CEN/TC 215 "Respiratory and anaesthetic equipment", the secretariat of which is held by BSI.

This European Standard shall be given the status of a national standard, either by publication of an identical text or by endorsement, at the latest by September 2016, and conflicting national standards shall be withdrawn at the latest by March 2019.

Attention is drawn to the possibility that some of the elements of this document may be the subject of patent rights. CEN [and/or CENELEC] shall not be held responsible for identifying any or all such patent rights.

This document supersedes EN ISO 5360:2012.

This document has been prepared under a mandate given to CEN by the European Commission and the European Free Trade Association, and supports essential requirements of EU Directive(s).

For relationship with EU Directive(s), see informative Annex ZA, which is an integral part of this document.

According to the CEN-CENELEC Internal Regulations, the national standards organizations of the following countries are bound to implement this European Standard: Austria, Belgium, Bulgaria, Croatia, Cyprus, Czech Republic, Denmark, Estonia, Finland, Former Yugoslav Republic of Macedonia, France, Germany, Greece, Hungary, Iceland, Ireland, Italy, Latvia, Lithuania, Luxembourg, Malta, Netherlands, Norway, Poland, Portugal, Romania, Slovakia, Slovenia, Spain, Sweden, Switzerland, Turkey and the United Kingdom.

Endorsement notice

The text of ISO 5360:2016 has been approved by CEN as EN ISO 5360:2016 without any modification.

AVA Documents
Document Sharing Hub

Full document details: BS EN ISO 5360:2016

Annex ZA
(informative)

Relationship between this European Standard and the Essential Requirements of EU Directive 93/42/EEC on medical devices

This European standard has been prepared under a mandate given to CEN by the European Commission and the European Free Trade Association to provide a means of conforming to Essential Requirements of the New Approach Directive 93/42/EEC.

Once this standard is cited in the Official Journal of the European Union under that Directive and has been implemented as a national standard in at least one Member State, compliance with the clauses of this standard given in Table ZA.1 confers, within the limits of the scope of this standard, a presumption of conformity with the corresponding Essential Requirements of that Directive and associated EFTA regulations.

Table ZA.1 — Correspondence between this European Standard and EU Directive 93/42/EEC

Clause(s)/sub-clause(s) of this European Standard	Essential Requirements (ERs) of Directive 93/42/EEC	Qualifying remarks/notes
4, 5, 6, 7, 9, 10	7.5, first paragraph, first sentence	
14.3 f), 14.2.1 last paragraph	7.5, second paragraph	Only the presence of phthalates is addressed; Presumption of conformity to labelling requirement only provided if the symbol defined in EN 15896 is used
4, 5, 6, 7, 9 and 11	9.1	Clauses 4 to 7 of this standard specify the design of the filling system to ensure specificity for anaesthetic agent and avoid the anaesthetic agent escaping into environment. Standard specifies colour coding of the anaesthetic agents including their generic names for a safe connection to anaesthetic systems Information on restrictions on use is addressed in the clauses on labelling and instructions for use, see 14.1 c), 14.2.1 c), d), e), f), 14.2.2, 14.3 a) – d) and f).
14	13.1	
11	13.2	Standard specifies colour coding of the anaesthetic agents including their generic names.
14.1 a), 14.2.1 a)	13.3 a)	
11, 14.1 c), 14.2.1 b), 14.2.1 c)	13.3 b)	packaging is not addressed
14.1 b)	13.3 d)	Presumption of conformity to ER 13.3 d) only provided if the word “LOT” is used
14.2.1.d)	13.3 e)	
14.1 a), 14.2.1 a)	13.3 a)	

Documents
Document Sharing Hub

Full document details: BS EN ISO 5360:2016

14.2.1 e)	13.3 f)	Consistency across the Community is not addressed
14.2.1 f)	13.3 i)	
14.1 c), 14.2.1 c), 14.2.2,	13.3 j)	
14.2.2), 14.3 b)	13.3 k)	
14.1 b)	13.5	
14.3 a), 14.3 b)	13.6 a)	
14.3 c), 14.3 d)	13.6 d)	
14.3 g	13.6 h)	
14.3 h)	13.6 q)	

WARNING — Other requirements and other EU Directives may be applicable to the product(s) falling within the scope of this standard.

Documents
Document Sharing Hub

Full document details: BS EN ISO 5360:2016

Contents

Page

Foreword ..... **iv**
1 Scope **1**
2 Normative references **1**
3 Terms and definitions **1**
4 Bottle **2**
5 Bottle collar **3**
6 Bottle adaptor **6**
7 Filler receptacle **10**
8 Filling rate **12**
9 Leakage **14**
10 Overfilling protection **14**
11 Colour coding **14**
12 Usability **14**
13 Clinical evaluation **14**
14 Information provided by the manufacturer **15**
14.1 Marking 15
14.2 Labelling 15
14.3 Instructions for use 15
Annex A (informative) **Recommendations on materials** **17**
Annex B (informative) **Types of agent-specific filling systems** **18**
Annex C (normative) **Determination of total leakage into atmosphere of anaesthetic agent during filling** **19**
Bibliography **21**

© ISO 2016 – All rights reserved

Documents
Document Sharing Hub
Full document details: BS EN ISO 5360:2016

Foreword

ISO (the International Organization for Standardization) is a worldwide federation of national standards bodies (ISO member bodies). The work of preparing International Standards is normally carried out through ISO technical committees. Each member body interested in a subject for which a technical committee has been established has the right to be represented on that committee. International organizations, governmental and non-governmental, in liaison with ISO, also take part in the work. ISO collaborates closely with the International Electrotechnical Commission (IEC) on all matters of electrotechnical standardization.

The procedures used to develop this document and those intended for its further maintenance are described in the ISO/IEC Directives, Part 1. In particular the different approval criteria needed for the different types of ISO documents should be noted. This document was drafted in accordance with the editorial rules of the ISO/IEC Directives, Part 2 (see www.iso.org/directives).

Attention is drawn to the possibility that some of the elements of this document may be the subject of patent rights. ISO shall not be held responsible for identifying any or all such patent rights. Details of any patent rights identified during the development of the document will be in the Introduction and/or on the ISO list of patent declarations received (see www.iso.org/patents).

Any trade name used in this document is information given for the convenience of users and does not constitute an endorsement.

For an explanation on the meaning of ISO specific terms and expressions related to conformity assessment, as well as information about ISO's adherence to the WTO principles in the Technical Barriers to Trade (TBT) see the following URL: Foreword - Supplementary information.

The committee responsible for this document is ISO/TC 121, *Anaesthetic and respiratory equipment*, Subcommittee SC 1, *Breathing attachments and anaesthetic machines*.

This fourth edition cancels and replaces the third edition (ISO 5360:2012), of which it constitutes a minor revision with the following changes:

— Figure 5 has been technically revised;

— minor editorial modifications have been incorporated into the text.

© ISO 2016 – All rights reserved
Documents
Document Sharing Hub
Full document details: BS EN ISO 5360:2016

INTERNATIONAL STANDARD ISO 5360:2016(E)

Anaesthetic vaporizers — Agent-specific filling systems

1 Scope

This International Standard specifies requirements, including dimensions, for agent-specific filling systems for agent-specific anaesthetic vaporizers.

This International Standard does not specify construction materials.

NOTE 1 For recommendations on materials, see Annex A.

Because of the unique properties of desflurane, dimensions for this agent have not been specified in this International Standard.

NOTE 2 Designs of connection systems, which only permit engagement of the agent-specific bottle adaptor to the bottle when the bottle collar is in place, are encouraged.

2 Normative references

The following documents, in whole or in part, are normatively referenced in this document and are indispensable for its application. For dated references, only the edition cited applies. For undated references, the latest edition of the referenced document (including any amendments) applies.

ISO 1101, *Geometrical Product Specifications (GPS) — Geometrical tolerancing — Tolerances of form, orientation, location and run-out*

3 Terms and definitions

For the purposes of this document, the following terms and definitions apply.

3.1
agent-specific
having both a prescribed configuration and prescribed dimensions, which are specific for a prescribed liquid anaesthetic agent

3.2
agent-specific filling system
functional system of *agent-specific* (3.1) coded connections between an anaesthetic bottle and an *agent-specific* (3.1) *anaesthetic vaporizer* (3.3), consisting of, for example, a threaded *bottle neck* (3.7) with collar, *bottle connector* (3.6), *male adaptor* (3.9), and *filler receptacle* (3.8)

Note 1 to entry: Different types of agent-specific filling systems are shown in Annex B.

3.3
anaesthetic vaporizer
device designed to facilitate the change of an anaesthetic agent from a liquid to a vapour

3.4
bottle adaptor
assembly that is intended to connect a bottle for liquid anaesthetic agent to an *agent-specific* (3.1) *anaesthetic vaporizer* (3.3)

3.5
bottle collar
agent-specific (3.1) component on the neck of a bottle causing it to be *agent-specific* (3.1)

© ISO 2016 – All rights reserved

AVA Documents Document Sharing Hub
Full document details: BS EN ISO 5360:2016

3.6
bottle connector
agent-specific (3.1) component that fits the thread on the *bottle neck* (3.7) and mates with the *agent-specific* (3.1) *bottle collar* (3.5)

3.7
bottle neck
external threaded part of the bottle and the adjacent contour over which an *agent-specific* (3.1) collar is fitted

3.8
filler receptacle
receptacle for a bottle or a *bottle adaptor* (3.4) on an *agent-specific* (3.1) *anaesthetic vaporizer* (3.3)

3.9
male adaptor
part of a *bottle adaptor* (3.4) that mates with a *filler receptacle* (3.8) on an *agent-specific* (3.1) vaporizer

4 Bottle

Each bottle shall have the following:

a) name of the anaesthetic agent with which it is intended to be used marked on it;

b) either a bottle collar complying with Clause 5 and a threaded neck complying with Figure 1 and Table 1, or a permanently attached bottle adaptor complying with 6.2.

Dimensions in millimetres

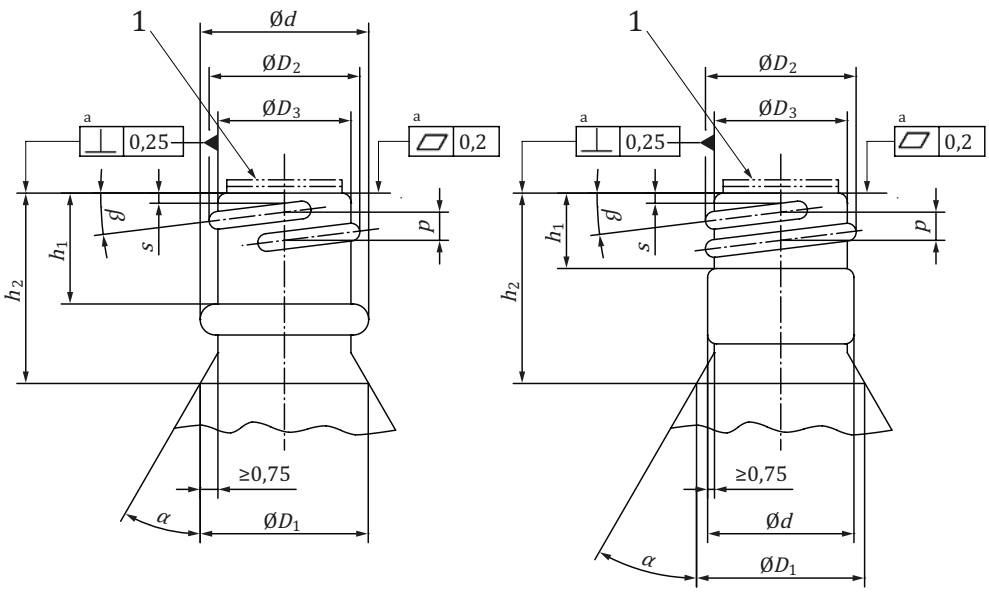

Key

1 optional pouring lip (dimension not specified)

a Flatness and perpendicularity tolerances in accordance with ISO 1101.

NOTE The dimensions shown form part of this International Standard. Other features are for illustrative purposes only. See Table 1.

Figure 1 — Two examples of threaded necks of bottles for anaesthetic agents

© ISO 2016 – All rights reserved
Documents
Document Sharing Hub
Full document details: BS EN ISO 5360:2016