BS EN ISO 5530-2:2025

BSI Standards Publication

Wheat flour — Physical characteristics of doughs

Part 2: Determination of rheological properties using an extensograph

Documents
Document Sharing Hub

Full document details: BS EN ISO 5530-2:2025

National foreword

This British Standard is the UK implementation of EN ISO 5530-2:2025. It is identical to ISO 5530-2:2025. It supersedes BS 4317-21:1999 and BS EN ISO 5530-2:2015, which are withdrawn.

The UK participation in its preparation was entrusted to Technical Committee AW/4, Cereals and pulses.

A list of organizations represented on this committee can be obtained on request to its committee manager.

Contractual and legal considerations

This publication has been prepared in good faith, however no representation, warranty, assurance or undertaking (express or implied) is or will be made, and no responsibility or liability is or will be accepted by BSI in relation to the adequacy, accuracy, completeness or reasonableness of this publication. All and any such responsibility and liability is expressly disclaimed to the full extent permitted by the law.

This publication is provided as is, and is to be used at the recipient's own risk.

The recipient is advised to consider seeking professional guidance with respect to its use of this publication.

This publication is not intended to constitute a contract. Users are responsible for its correct application.

© The British Standards Institution 2025
Published by BSI Standards Limited 2025

ISBN 978 0 539 00271 3

ICS 67.060

Compliance with a British Standard cannot confer immunity from legal obligations.

This British Standard was published under the authority of the Standards Policy and Strategy Committee on 31 January 2025.

Amendments/corrigenda issued since publication

Date	Text affected

Documents
Document Sharing Hub

Full document details: BS EN ISO 5530-2:2025

EUROPEAN STANDARD

NORME EUROPÉENNE

EUROPÄISCHE NORM

EN ISO 5530-2

January 2025

ICS 67.060

Supersedes EN ISO 5530-2:2014

English Version

Wheat flour - Physical characteristics of doughs - Part 2: Determination of rheological properties using an extensograph (ISO 5530-2:2025)

Farines de blé tendre - Caractéristiques physiques des pâtes - Partie 2: Détermination des caractéristiques rhéologiques au moyen de l'extensographe (ISO 5530-2:2025)

Weizenmehl - Physikalische Eigenschaften von Teigen - Teil 2: Bestimmung der rheologischen Eigenschaften mittels Extensograph (ISO 5530-2:2025)

This European Standard was approved by CEN on 27 September 2021.

CEN members are bound to comply with the CEN/CENELEC Internal Regulations which stipulate the conditions for giving this European Standard the status of a national standard without any alteration. Up-to-date lists and bibliographical references concerning such national standards may be obtained on application to the CEN-CENELEC Management Centre or to any CEN member.

This European Standard exists in three official versions (English, French, German). A version in any other language made by translation under the responsibility of a CEN member into its own language and notified to the CEN-CENELEC Management Centre has the same status as the official versions.

CEN members are the national standards bodies of Austria, Belgium, Bulgaria, Croatia, Cyprus, Czech Republic, Denmark, Estonia, Finland, France, Germany, Greece, Hungary, Iceland, Ireland, Italy, Latvia, Lithuania, Luxembourg, Malta, Netherlands, Norway, Poland, Portugal, Republic of North Macedonia, Romania, Serbia, Slovakia, Slovenia, Spain, Sweden, Switzerland, Türkiye and United Kingdom.

EUROPEAN COMMITTEE FOR STANDARDIZATION
COMITÉ EUROPÉEN DE NORMALISATION
EUROPÄISCHES KOMITEE FÜR NORMUNG

CEN-CENELEC Management Centre: Rue de la Science 23, B-1040 Brussels

© 2025 CEN All rights of exploitation in any form and by any means reserved worldwide for CEN national Members.

Ref. No. EN ISO 5530-2:2025 E

Documents
Document Sharing Hub

Full document details: BS EN ISO 5530-2:2025

European foreword

This document (EN ISO 5530-2:2025) has been prepared by Technical Committee ISO/TC 34 "Food products" in collaboration with Technical Committee CEN/TC 338 “Cereal and cereal products” the secretariat of which is held by AFNOR.

This European Standard shall be given the status of a national standard, either by publication of an identical text or by endorsement, at the latest by July 2025, and conflicting national standards shall be withdrawn at the latest by July 2025.

Attention is drawn to the possibility that some of the elements of this document may be the subject of patent rights. CEN shall not be held responsible for identifying any or all such patent rights.

This document supersedes EN ISO 5530-2:2014.

Any feedback and questions on this document should be directed to the users’ national standards body/national committee. A complete listing of these bodies can be found on the CEN website.

According to the CEN-CENELEC Internal Regulations, the national standards organizations of the following countries are bound to implement this European Standard: Austria, Belgium, Bulgaria, Croatia, Cyprus, Czech Republic, Denmark, Estonia, Finland, France, Germany, Greece, Hungary, Iceland, Ireland, Italy, Latvia, Lithuania, Luxembourg, Malta, Netherlands, Norway, Poland, Portugal, Republic of North Macedonia, Romania, Serbia, Slovakia, Slovenia, Spain, Sweden, Switzerland, Türkiye and the United Kingdom.

Endorsement notice

The text of ISO 5530-2:2025 has been approved by CEN as EN ISO 5530-2:2025 without any modification.

Documents
Document Sharing Hub

Full document details: BS EN ISO 5530-2:2025

Contents

Page

Foreword ... **iv**
1 Scope ... **1**
2 Normative references ... **1**
3 Terms and definitions ... **1**
4 Principle ... **2**
5 Reagents ... **3**
6 Apparatus ... **3**
7 Sampling ... **4**
8 Procedure ... **4**
8.1 Determination of the moisture content of the flour ... 4
8.2 Preparation of apparatus ... 4
8.3 Test portion ... 5
8.4 Preparation of the dough ... 5
8.5 Determination ... 6
9 Expression of results ... **6**
9.1 General ... 6
9.2 Water absorption ... 6
9.3 Resistance to stretching ... 6
9.3.1 Maximum resistance ... 6
9.3.2 Resistance at constant deformation ... 7
9.4 Extensibility, *E* ... 7
9.5 Energy ... 8
9.6 Ratio (*R*/*E*) ... 8
10 Precision ... **8**
10.1 Interlaboratory tests ... 8
10.2 Repeatability ... 8
10.3 Reproducibility ... 8
10.4 Comparison of two groups of measurements in two laboratories ... 9
11 Test report ... **9**
Annex A (informative) **Description of the extensograph** ... **10**
Annex B (informative) **Results of interlaboratory test** ... **15**
Annex C (informative) **Fidelity data** ... **52**
Bibliography ... **54**

© ISO 2025 – All rights reserved

Documents
Document Sharing Hub
Full document details: BS EN ISO 5530-2:2025

Foreword

ISO (the International Organization for Standardization) is a worldwide federation of national standards bodies (ISO member bodies). The work of preparing International Standards is normally carried out through ISO technical committees. Each member body interested in a subject for which a technical committee has been established has the right to be represented on that committee. International organizations, governmental and non-governmental, in liaison with ISO, also take part in the work. ISO collaborates closely with the International Electrotechnical Commission (IEC) on all matters of electrotechnical standardization.

The procedures used to develop this document and those intended for its further maintenance are described in the ISO/IEC Directives, Part 1. In particular, the different approval criteria needed for the different types of ISO document should be noted. This document was drafted in accordance with the editorial rules of the ISO/IEC Directives, Part 2 (see www.iso.org/directives).

ISO draws attention to the possibility that the implementation of this document may involve the use of (a) patent(s). ISO takes no position concerning the evidence, validity or applicability of any claimed patent rights in respect thereof. As of the date of publication of this document, ISO had not received notice of (a) patent(s) which may be required to implement this document. However, implementers are cautioned that this may not represent the latest information, which may be obtained from the patent database available at www.iso.org/patents. ISO shall not be held responsible for identifying any or all such patent rights.

Any trade name used in this document is information given for the convenience of users and does not constitute an endorsement.

For an explanation of the voluntary nature of standards, the meaning of ISO specific terms and expressions related to conformity assessment, as well as information about ISO's adherence to the World Trade Organization (WTO) principles in the Technical Barriers to Trade (TBT), see www.iso.org/iso/foreword.html.

This document was prepared by Technical Committee ISO/TC 34, *Food products*, Subcommittee SC 4, *Cereals and pulses*, in collaboration with the European Committee for Standardization (CEN) Technical Committee CEN/TC 338, *Cereal and cereal products,* in accordance with the Agreement on technical cooperation between ISO and CEN (Vienna Agreement).

This fourth edition cancels and replaces the third edition (ISO 5530-2:2012), which has been technically revised.

The main changes are as follows:

— a wheat flour interlaboratory test was performed in 2016 to evaluate the repeatability and reproducibility of the test method specified in this document, and the results have been added as Annex B;

— more detailed procedure for electronic devices has been added.

A list of all parts in the ISO 5530 series can be found on the ISO website.

Any feedback or questions on this document should be directed to the user's national standards body. A complete listing of these bodies can be found at www.iso.org/members.html.

© ISO 2025 – All rights reserved

Documents
Document Sharing Hub
Full document details: BS EN ISO 5530-2:2025

Wheat flour — Physical characteristics of doughs —

Part 2: Determination of rheological properties using an extensograph

1 Scope

This document specifies a method using an extensograph for the determination of the rheological properties of wheat flour doughs in an extension test. The recorded load–extension curve is used to assess the general quality of flour and its response to improving agents.

The method is applicable to experimental and commercial flours from wheat (*Triticum aestivum* L.).

NOTE 1 This document is related to ICC 114[5] and AACC Method 54-10[6].

NOTE 2 For dough preparation, a farinograph is used (see 6.2)

2 Normative references

The following documents are referred to in the text in such a way that some or all of their content constitutes requirements of this document. For dated references, only the edition cited applies. For undated references, the latest edition of the referenced document (including any amendments) applies.

ISO 712-1, *Cereals and cereal products — Determination of moisture content — Part 1: Reference method*

ISO 3696, *Water for analytical laboratory use — Specification and test methods*

ISO 5530-1, *Wheat flour — Physical characteristics of doughs — Part 1: Determination of water absorption and rheological properties using a farinograph*

3 Terms and definitions

For the purposes of this document, the following terms and definitions apply.

ISO and IEC maintain terminology databases for use in standardization at the following addresses:

— ISO Online browsing platform: available at https://www.iso.org/obp

— IEC Electropedia: available at https://www.electropedia.org/

3.1
energy
capacity to do work

Note 1 to entry: For the purposes of this document, energy is determined as the area under a recorded curve. The energy describes the work applied when *stretching* (3.6) a dough sample.

Note 2 to entry: When using a mechanical device, the area is measured by a planimeter and reported in square centimetres. In electronic devices, this area is calculated automatically by the software.

© ISO 2025 – All rights reserved

Documents
Document Sharing Hub
Full document details: BS EN ISO 5530-2:2025

3.2
extensibility
E
distance travelled by the recorder paper from the moment that the hook touches the test piece until rupture of (one of the strings of) the test piece

Note 1 to entry: In electronic devices, this is calculated automatically by the software.

Note 2 to entry: See 9.4 and Figure 1.

3.3
extensograph water absorption
volume of water required to produce a dough with a consistency of 500 farinograph unit (FU) after 5 min mixing, under specified operating conditions

Note 1 to entry: Extensograph water absorption is expressed in millilitres per 100 g of flour at 14,0 % mass fraction moisture content.

3.4
maximum resistance
R_m
mean of the maximum heights of the extensograph curves from two test pieces, provided that the difference between them does not exceed 15 % of their mean value

Note 1 to entry: See 9.3.1 and Figure 1.

3.5
ratio
R/E
quotient of the *maximum resistance*, R_m, (3.4) and the *extensibility* (3.2) or the resistance after 50 mm transposition of the recorder paper, R_{50}, and the extensibility

Note 1 to entry: In electronic devices, this is calculated automatically by the software.

Note 2 to entry: The ratio is an additional factor in the review of the dough behaviour.

3.6
resistance at constant deformation
R_{50}
mean of the heights of the extensograph curves after 50 mm transposition of the recorder paper from two test pieces, provided that the difference between them does not exceed 15 % of their mean value

Note 1 to entry: In electronic devices, this is calculated automatically by the software.

Note 2 to entry: See 9.3.2 and Figure 1.

3.7
stretching
resistance of dough to extension and the extent to which it can be stretched until breaking, under specified operating conditions

Note 1 to entry: The resistance is expressed in arbitrary units (extensograph unit, EU).

Note 2 to entry: The extent of stretching is expressed in millimetres.

4 Principle

Dough is prepared from flour, water and salt in a farinograph under specified conditions. A test piece is then moulded on the balling unit and moulder of the extensograph into a standard shape. After a fixed period of time, the test piece is stretched and the force required recorded. Immediately after these operations, the same test piece is subjected to two further cycles of moulding, rest period and stretching.

© ISO 2025 – All rights reserved

Documents
Document Sharing Hub
Full document details: BS EN ISO 5530-2:2025

The size and shape of the curves obtained are a guide to the physical properties of the dough. These physical properties influence the end-use quality of the flour.

5 Reagents

Use only reagents of recognized analytical grade, unless otherwise specified, and distilled or demineralized water conforming to grade 3 in accordance with ISO 3696.

5.1 Sodium chloride of recognized analytical grade.

5.2 Optional release material.

Rice flour or starch (to avoid that the dough is sticking to the moulder and roller)

6 Apparatus

The usual laboratory apparatus and, in particular, the following shall be used.

6.1 Extensograph,[1] with a thermostat consisting of a constant temperature water bath (see Annex A), with the following operating characteristics:

— rotational frequency of the balling unit: (83 ± 3) min^{-1} (r/min);

— rotational frequency of the moulder: (15 ± 1) min^{-1} (r/min);

— hook speed: (1,45 ± 0,05) cm/s;

— chart speed: (0,65 ± 0,01) cm/s; in electronic devices, this is recorded automatically by the device;

— force exerted per extensograph unit: (12,3 ± 0,3) mN/EU [(1,25 ± 0,03) gf/EU].

Some older instruments have a different calibration for force/unit deflection. The procedure specified can be used with such instruments, but it is necessary for the different calibration to be taken into account when comparing the results with instruments calibrated as above.

NOTE An electronic extensograph can be used, see Clause A.5.

6.2 Farinograph,[2] connected to a thermostat with the operating characteristics specified in ISO 5530-1.

6.3 Balance, capable of weighing to the nearest ±0,1 g.

6.4 Spatula, made of a non-metallic material.

6.5 Conical flask, of 250 ml capacity.

1) This document has been drawn up on the basis of the Brabender Extensograph, which is an example of a suitable product available commercially. This information is given for the convenience of users of this document and does not constitute an endorsement by ISO of this product. Equivalent products may be used if they can be shown to lead to the same results.

2) This document has been drawn up on the basis of the Brabender Farinograph, which is an example of a suitable product available commercially. This information is given for the convenience of users of this document and does not constitute an endorsement by ISO of the product named. Equivalent products may be used if they can be shown to lead to the same results.

© ISO 2025 – All rights reserved

Documents
Document Sharing Hub
Full document details: BS EN ISO 5530-2:2025

7 Sampling

Sampling is not part of the method specified in this document. A recommended sampling method is given in ISO 24333[4].

It is important that the laboratory receives a sample that is truly representative and that has not been damaged or changed during transport and storage.

8 Procedure

8.1 Determination of the moisture content of the flour

Determine the moisture content of the flour using the method specified in ISO 712-1 or by near infrared spectroscopy. The performances of the NIR should be demonstrated in accordance with ISO 12099 and reach at least one standard error of prediction (SEP) ≤ 0,15 % determined over the entire scope of this document.

NOTE In comparison with ISO 712-1, the error of prediction for ISO 12099 is higher.

8.2 Preparation of apparatus

8.2.1 Turn on the thermostat (6.2) of the farinograph and circulate the water until the required temperature is reached, prior to using the instrument. Before and during use, check the temperatures of:

— the thermostat;

— the mixing bowl of the farinograph, in the hole provided for this purpose;

— the extensograph cabinet.

All temperatures shall be (30 ± 0,2) °C.

8.2.2 For mechanical devices, adjust the arm of the pen of the extensograph so as to obtain a zero reading when a cradle with both its clamps plus 150 g is placed in position. For electronic devices, the zero adjustment is programmed to be done automatically at the start of the measurement.

8.2.3 Pour some water into the trough of each cradle support, so that the bottom is fully covered in order to get a constant humidity, and place the supports, cradles and clamps in the cabinet at least 15 min before use.

8.2.4 For mechanical devices, uncouple the mixer of the farinograph from the driving shaft and adjust the position of the counterweight(s) so as to obtain zero deflection of the pointer with the motor running at the specified rotational frequency (see ISO 5530-1:2025, 6.1). Switch off the motor and then couple the mixer. For electronic devices, the zero adjustment is programmed to be done automatically at the start of the measurement.

For mechanical devices, lubricate the mixer with a drop of water between the back-plate and each of the blades. Check that the deflection of the pointer is within the range (0 ± 5) FU with the mixing blades operating at the specified rotational frequency in the empty, clean bowl. If the deflection exceeds 5 FU, clean the mixer more thoroughly or eliminate other causes of friction. For electronic devices, the lubrication of the blades is done with silicon fat.

For mechanical devices, adjust the arm of the pen so as to obtain identical readings from the pointer and the recording pen.

For mechanical devices, adjust the damper so that, with the motor running, the time required for the pointer to go from 1 000 FU to 100 FU is (1,0 ± 0,2) s.

8.2.5 The water added to the flour should have a temperature of (30 ± 0,5) °C.

© ISO 2025 – All rights reserved

Documents
Document Sharing Hub
Full document details: BS EN ISO 5530-2:2025

8.3 Test portion

If necessary, bring the flour to a temperature of between 25 °C to 30 °C

Weigh, to the nearest 0,1 g, the equivalent of 300 g of flour having a moisture content of 14 % mass fraction. Let this mass, in grams, be *m*. See ISO 5530-1:2025, Table 1, for *m* as a function of moisture content.

Place the flour into the farinograph mixer. Cover the mixer and keep it covered until the end of mixing (see 8.4.2), except for the shortest possible time when water has to be added and the dough scraped down (see ISO 5530-1:2025, A.1.2).

8.4 Preparation of the dough

8.4.1 Place (6,0 ± 0,1) g for the 300 g mixer or (1,0 ± 0,1) g for the 50 g mixer of the sodium chloride (5.1) in the conical flask (6.5). Run in the amount of water that is necessary to prepare a dough of target consistency and dissolve the salt.

8.4.2 Mix in the farinograph mixer at the specified rotational frequency (see ISO 5530-1:2025, 6.1) for 1 min or slightly longer. Pour the salt solution (see 8.4.1) within less than 25 s through a funnel into the centre hole of the bottom part of the lid, when a whole-minute line on the recorder paper passes by the pen or is automatically recorded by the electronic devices. When the dough forms, scrape down the sides of the bowl with the spatula (6.4), adding any adhering particles to the dough without stopping the mixer. If the consistency is too high, add a little more water to obtain a consistency of 500 FU after mixing for 5 min. Stop mixing and clean the mixer.

In order to simplify the measurement and the reading, the recorder paper may be moved forward during the pre-mixing of the flour. Do not move it backwards. For electronic devices, a time is registered; the measurement can start at any time.

NOTE 1 With older models of the farinograph, where the bowl is covered by a single plate without a dosing hole in the right corner (see ISO 5530-1:2025, A.1.2), the salt solution is poured into the right-hand front corner of the bowl.

NOTE 2 If the first dough meets the requirements of 8.4.3, test pieces from it can be moulded (see 8.4.4) and stretched (see 8.5.1).

8.4.3 Make further mixings as necessary, until a dough is obtained:

— to which the salt solution and water have been added within 25 s;

— the consistency of which, measured at the centre of the curve after mixing for 5 min, is between 480 FU and 520 FU.

8.4.4 Take a support with two cradles from the cabinet of the extensograph (6.1). Remove their clamps.

Remove the dough from the mixer. Weigh a (150 ± 0,5) g test piece rapidly. Place it rapidly in the balling unit and perform 20 revolutions of the plate. Remove the dough from the balling unit and pass it once through the moulder, ensuring that the test piece enters the back centrally, base first. Roll the test piece off the moulder into the centre of a cradle and clamp it. Set the timer for 45 min. Weigh a second test piece. Ball, mould and clamp it in the same way. Place the support with two cradles and test pieces in the cabinet.

Very sticky doughs (e.g. when dough remains on the moulder or the roller) may be dusted lightly with rice flour or starch before being put into the moulder.

In the case of doughs showing substantial elastic recovery (which causes the upper part of the cradle to lift up when placing the dough in it), the clamps should be held down for a few seconds to ensure that they fix the dough properly.

Clean the farinograph mixer.

© ISO 2025 – All rights reserved

Documents
Document Sharing Hub
Full document details: BS EN ISO 5530-2:2025

8.5 Determination

8.5.1 Exactly 45 min after clamping the first test piece, place the first cradle in the balance arm of the extensograph (6.1); the bridge between the two halves of the cradle shall be on the left-hand side so as not to be touched by the stretching hook when travelling. Adjust the pen to zero force (not necessary for electronic devices). Immediately start the stretching hook.

Observe the test piece (see 9.4, paragraph 2). After rupture of the piece, remove the cradle.

NOTE In recent models of the extensograph, the hook automatically returns to its upper position. With older models, a switch can be used to stop the hook after breaking of the test piece and to initiate the return to its upper position.

8.5.2 Collect the dough from the cradle and the hook. Repeat the balling and moulding operations as specified in 8.4.4 on this test piece. Reset the timer for 45 min.

8.5.3 Turn the recorder paper back to the same starting position as for the first test piece force (not necessary for electronic devices). Repeat the stretching operation (see 8.5.1) on the second test piece. Collect the dough from the cradle and the hook. Repeat the balling and moulding operations (see 8.4.4) on the second test piece.

8.5.4 Repeat the stretching, balling and moulding operations specified in 8.5.1 to 8.5.3, returning the moulded test pieces to the cabinet. These operations take place after slightly more than 90 min from the end of mixing.

8.5.5 Repeat the operation specified in 8.5.1, stretching both test pieces in turn. This operation takes place after slightly more than 135 min from the end of mixing.

8.5.6 Other variations of this procedure, and evaluations of them, exist. However, they are not valid for use with this document. In order to carry out quick and time-saving measurements, another procedure may be suitable. The difference from the standard procedure is in the rest periods. Stretching after 45 min, 90 min and 135 min after mixing are replaced by stretching after 30 min, 60 min and 90 min after mixing. The shape and the size of the curves obtained differ from those of the standard extensograms. When the quick procedure is used, it is necessary to state this in the test report.

9 Expression of results

9.1 General

To facilitate the calculations, a computer may be used. The extensograph has to be modified by adding an electrical output for transferring the data to the computer. With the appropriate software, the computer evaluates the diagram in accordance with 9.2 to 9.5 and documents the diagram and the results.

9.2 Water absorption

Calculate the extensograph water absorption, expressed in millilitres per 100 g of flour at 14 % mass fraction moisture content for the 300 g mixer.

9.3 Resistance to stretching

9.3.1 Maximum resistance

Take as the maximum resistance, R_m, to stretching the mean of the maximum heights of the extensograph curves (see Figure 1) from the two test pieces, provided that the difference between them does not exceed 15 % of their mean value.

© ISO 2025 – All rights reserved

Documents
Document Sharing Hub
Full document details: BS EN ISO 5530-2:2025

When using mechanical devices, the result should be read with an accuracy to the nearest 5 EU.

Report each of the mean values of R_{m45}, R_{m90} and R_{m135} (mean values are calculated by electronic devices automatically).

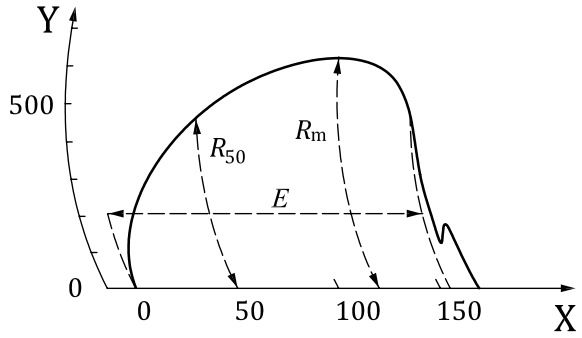

Key

X	time or extension (x/mm)	E	extensibility
Y	force (EU)	R_m	maximum resistance
		R_{50}	resistance after 50 mm transposition of the recorder paper

Figure 1 — Representative extensogram showing the commonly measured indices

9.3.2 Resistance at constant deformation

Some people prefer to measure the height of the curve at a fixed extension of the test piece, usually corresponding to 50 mm transposition of the recorder paper or electronic chart. The extension is measured from the moment that the hook touches the test piece, i.e. when the force is suddenly different from zero. This parameter was not evaluated in the ring tests.

Take as the result of the resistance to stretching at constant deformation, R_{50}, the mean of the heights of the extensograph curves after 50 mm transposition of the recorder paper or electronic chart (see Figure 1) from the two test pieces, provided that the difference between them does not exceed 15 % of their mean value.

When using mechanical devices, the result should be read with an accuracy to the nearest 5 EU.

Report each of the mean values of $R_{50,45}$, $R_{50,90}$ and $R_{50,135}$ (mean values are calculated by electronic devices automatically).

Owing to the greater depression of the cradle, a more resistant test piece is extended to a lesser extent at 50 mm transposition of the recorder paper or electronic chart than a less resistant test piece. It is possible, by means of a suitable template, to read the resistances of all test pieces at the same net extension. If such a template is used, it is necessary to mention this in the test report.

9.4 Extensibility, E

Measure the extensibility until rupture. Rupture is indicated on the extensograph curve either by a smooth fall of the curve almost to zero force, or by a sharp break in the curve (see Figure 1).

Beyond the breaking point, the course of the recording depends on the inertia of the lever system and on the time interval between the breaking of the two strings of the test piece. For measurement of the extensibility, the curve is supposed to proceed, from the breaking point, along a circular ordinate line (dashed line in Figure 1) down to zero force. To identify the breaking point on the curve properly, it is necessary to observe the test piece when breaking.

Take as the result of the extensibility the mean distance on the extensograph curves from the two test pieces, provided that the difference between them does not exceed 9 % of their mean value.

Report each of the mean values of E_{45}, E_{90} and E_{135} to the nearest millimetre.

© ISO 2025 – All rights reserved

Documents
Document Sharing Hub
Full document details: BS EN ISO 5530-2:2025

9.5 Energy

Determine the energy by measuring the area under the recorded curve using a planimeter (the area is calculated by electronic devices automatically). Report in square centimetres.

9.6 Ratio (R/E)

Determine the ratio R/E.

10 Precision

10.1 Interlaboratory tests

Interlaboratory tests were performed in 2016 by Cereal & Food Expertise (see Annex B).

NOTE The repeatability and reproducibility values derived from these interlaboratory tests are not necessarily applicable to other measurement ranges and matrices than those given.

10.2 Repeatability

The absolute difference between two independent single test results, obtained using the same method on identical test material in the same laboratory by the same operator using the same equipment within a short interval of time, will in not more than 5 % of cases be greater than the values given in Table 1.

Table 1 — Repeatability data obtained by using extensograph

Characteristic	45 min	90 min	135 min
Energy (cm^2)	r = 0,155 4 X – 1,909 88	r = 13,3	r = 0,160 72 X – 0,322 28
Extensibility (E, mm)	r = 13,8	r = 14,2	r = 13,9
Maximum resistance (R_m, EU)	r = 44,8	r = 61,8	r = 64,8
Resistance at constant deformation (R_{50}, EU)	r = 33,9	r = 45,8	r = 47,4
Ratio (R_m/E)	r = 0,37	r = 0,49	r = 0,51
Ratio (R_{50}/E)	r = –1,067 08 X + 2,105 88	r = 0,52	r = 0,44
NOTE X is the arithmetic mean of the two determinations.			

10.3 Reproducibility

The absolute difference between two single test results, obtained using the same method on identical test material in different laboratories with different operators using different equipment, will in not more than 5 % of cases be greater than the values given in Table 2.

© ISO 2025 – All rights reserved

Documents
Document Sharing Hub
Full document details: BS EN ISO 5530-2:2025

Table 2 — Reproducibility data obtained by using extensograph

Characteristic	45 min	90 min	135 min
Energy (cm^2)	R = 0,160 72 X – 3,495 52	R = 21,7	R = 0,356 16 X – 7,641 2
Extensibility (E, mm)	R = 21,1	R = 22,3	R = 23,4
Maximum resistance (R_m, EU)	R = 65,3	R = 95,1	R = 104,5
Resistance at constant deformation (R_{50}, EU)	R = 51	R = 76,6	R = 78,1
Ratio (R_m/E)	R = 0,55	R = 0,75	R = 0,78
Ratio (R_{50}/E)	R = –1,147 72 X + 2,399 32	R = 0,66	R = 0,69
NOTE X is the arithmetic mean of the two determinations.			

10.4 Comparison of two groups of measurements in two laboratories

The critical difference (CD_R) between two averaged values each obtained in two different laboratories from two test results under repeatability conditions is equal to Formula (1):

$$C_D = 2{,}8\sqrt{s_R{}^2 - s_r{}^2\left(1 - \frac{1}{2n_1} - \frac{1}{2n_2}\right)} = 2{,}8\sqrt{s_R{}^2 - 0{,}5 s_r{}^2} \quad (1)$$

where

s_r is the standard deviation of repeatability;

s_R is the standard deviation of reproducibility;

n_1 and n_2 are the number of test results corresponding to each averaged value.

See the calculated values for the different levels of each parameter.

Data are shown in Annex C.

11 Test report

The test report shall contain at least the following information:

a) all information necessary for the complete identification of the sample;

b) the sampling method used, if known;

c) the test method used, with reference to this document, i.e. ISO 5530-2;

d) all operating details not specified in this document, or regarded as optional, together with details of any incidents that could have influenced the test result(s);

e) the test result(s) obtained;

f) if the repeatability has been checked, the final calculated result obtained;

g) the date of the test.

© ISO 2025 – All rights reserved

Documents
Document Sharing Hub
Full document details: BS EN ISO 5530-2:2025

Annex A
(informative)

Description of the extensograph

A.1 General description

The extensograph comprises two units:

a) the extensograph unit itself (see Clause A.2);

b) a thermostat for the circulating water (see Clause A.3).

The extensograph is used in conjunction with the farinograph, which also comprises a thermostat (see ISO 5530-1).

A.2 Extensograph unit

A.2.1 General

The extensograph unit is mounted on a heavy cast-iron base plate having four levelling screws and consists of:

a) a balling unit or rounder (see A.2.2);

b) a moulder or shaper (see A.2.3);

c) cradles and clamps for holding the test pieces, and cradle supports;

d) a three-section rest cabinet (see A.2.4);

e) a device for stretching a test piece (see A.2.5);

f) means for recording the resistance to stretching and the extensibility of the test piece in the form of extensograms (see A.2.6).

The stretching device and means for recording are illustrated diagrammatically in Figure A.1.

© ISO 2025 – All rights reserved

Documents
Document Sharing Hub
Full document details: BS EN ISO 5530-2:2025

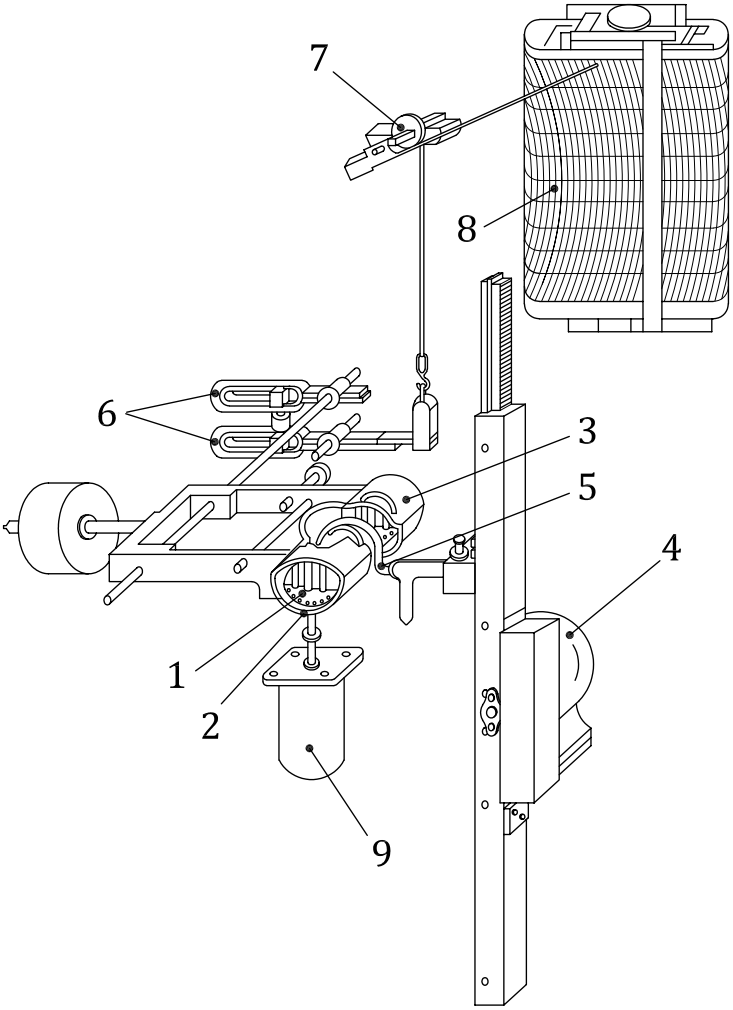

Key

1 test piece
2 cradle
3 clamp for cradle
4 electric motor
5 stretching hook
6 lever system
7 scale
8 recorder
9 dash-pot damper

Figure A.1 — Diagram of the stretching device and recorder of the mechanical extensograph

A.2.2 Balling unit

The balling unit consists of a bottomless box with a loaded lid. Beneath the box a flat plate rotates. In its centre, it carries a pin on which the dough is impaled. The rotational frequency of the balling unit shall be (83 ± 3) min^{-1}.

Water from the thermostat circulates through the hollow side walls of the box to control its temperature.

Some instruments made before 1965 can have a rotational frequency of 112 min^{-1}. If such an instrument is used, mention this in the test report.

A.2.3 Moulder

The moulder consists of a horizontal roller revolving inside an incomplete cylinder at a rotational frequency of (15 ± 1) min^{-1}. The cylinder has a metal plate attached to its inner wall. The dough is thus subjected to a moulding action between the roller and the metal plate.

© ISO 2025 – All rights reserved

Documents
Document Sharing Hub
Full document details: BS EN ISO 5530-2:2025

Water from the thermostat circulates through the hollow incomplete cylinder to control its temperature.

A.2.4 Rest cabinet

The temperature-controlled rest cabinet consists of three sections, each one for one cradle support with two cradles, and each one with a door.

The test pieces, having been balled and moulded, are rested in the cradles on their supports in the rest cabinet. Each of the cradle supports carries two cradles and has a trough containing water to prevent skinning of the test pieces.

A.2.5 Stretching device

The cylindrical test piece, in a cradle, is supported in a horizontal position by two arms attached to one end of a pivotally mounted lever, which carries a counterweight at the other end. A hook in contact with the centre of the upper side of the test piece is moved vertically downwards by the action of an electric motor, at a speed of (1,45 ± 0,05) cm/s, thereby stretching the test piece. Downward movement of the dough hook is continued until the test piece breaks.

The mechanism actuating the stretching hook has automatic limit switches, which terminate the movement when the hook reaches either the top or the bottom limit. In recent models of extensograph, the hook, having reached the bottom position, automatically returns to its top position.

The resistance of the dough to stretching results in a downward movement of the lever carrying the cradle with the test piece.

A.2.6 Recorder

Movement of the lever carrying the cradle with the test piece is transmitted by a further system of levers to a pen, which is thereby moved over a band of paper, recording the movement in the form of an extensogram.

Movements of the lever system and recorder pen are damped by a piston immersed in oil. The piston is connected to the lever carrying the cradle.

The paper for the recorder is supplied in the form of a roll. It is moved by an electric clock-type motor at a rate of (0,65 ± 0,01) cm/s. Along its length, it bears a printed scale in centimetres. Across its width, it bears a circular scale (radius 200 mm) with arbitrary units, running from 0 EU to 1 000 EU.

For electronic devices, the signal is registered digitally and displayed in the software.

A.3 Thermostat

The thermostat normally consists of a tank with water and contains the following parts.

a) An electric heating element.

b) A thermoregulator to control the heating element, capable of maintaining the temperature of the balling unit, moulder and rest cabinet of the extensograph at (30 ± 0,2) °C. Under adverse conditions, a slightly higher temperature of the water can be necessary. It shall be maintained with the same tolerance.

c) A thermometer.

d) A motor-driven pump and stirrer. The pump is connected to the extensograph by means of flexible tubing. It shall have sufficient capacity to maintain the temperature of the rest cabinet at (30 ± 0,2) °C.

e) A coil of metal tubing to cool the thermostat bath by a flow of tap water.

It is not recommended that a single thermostat be used for both the farinograph and extensograph. If this is done, however, the two instruments shall be served by separate pumps.

© ISO 2025 – All rights reserved

Documents
Document Sharing Hub
Full document details: BS EN ISO 5530-2:2025

A.4 Calibration of the extensograph

To give correct results, the lever system and scale of the extensograph should be adjustable. Mount a back-plate inside the moulder, the curve of which fits those of a special mould. Deviations in the curve of the back-plate cause deviations in the length and intersection of the dough pieces to be stretched. If there is any doubt about the curvature of the back-plate, its curvature should be checked and/or adjusted by the manufacturer.

For the mechanical system to check the balance system for proper functioning, load the system with a known mass. First, place the empty dough holder (200 g) with the two clamps (75 g each) at the end of the arms of the balance system in the same way as during the actual test. To simulate the mass of the dough test piece, suspend an additional mass of 150 g centrally from the holder by a string. The recorder, if properly adjusted, will read 0 EU. With an additional 500 g suspended from the holder, the recorder reads 400 EU; and after a further 500 g mass has been added, the reading rises to 800 EU, i.e.

Mechanical system:	Electronic system:
500 g (holder + clamp + 150 g) = 0 EU	500 g (sample weight) = 0 EU
500 g + 500 g (= 1 000 g) = 400 EU	500 g + 650 g (sample weights) = 500 EU
500 g + 500 g + 500 g (= 1 500 g) = 800 EU	500 g + 650 g + 650 g (sample weights) = 1 000 EU

Instead of holders and camps, for the calibration of electronic devices, special sample weights to fit into the lever are used.

When a total mass of 500 g is placed on the lever arm, in the position of the cradle, the lever arm shall be horizontal. Therefore, it is recommended that the mass of each combination of cradle and two clamps be checked.

The total mass shall be (350 ± 0,5) g. It is recommended that each of the cradles and clamps be marked to ensure that each combination of cradle and clamps fits the specified mass.

There is no method for absolute adjustment of farinograph extensograph combinations. It is possible to have the extensograph adjusted by the manufacturer to their standard. With old or worn instruments, this can be impossible. If good agreement between instruments is to be maintained, frequent checks are required.

A.5 Electronic extensograph

A.5.1 Application

An electronic extensograph measures the stretching properties of wheat flour dough in conformity with this document to determine the flour quality and to check for flour treatment with additives, such as ascorbic acid, proteinases or emulsifiers.

The process for measuring the stretching properties is as follows:

— preparation of wheat flour dough in a calibrated mechanical or electronic farinograph under defined conditions;

— shaping of the dough sample in the balling unit (homogenizer, rounder) and in the dough roller (moulder);

— proving of the dough in the proving cabinet;

— stretching of the dough in the extensograph-E until rupture.

The stretching properties of the dough, in particular the resistance to stretching and the extensibility, characterize the flour quality and, consequently, the baking and processing properties of the corresponding dough. Apart from the flour quality, they also show the influence of additives acting on the dough (including gluten-structure).

© ISO 2025 – All rights reserved

Documents
Document Sharing Hub
Full document details: BS EN ISO 5530-2:2025