BS EN ISO 5640:2024

BSI Standards Publication

Industrial valves — Mounting kits for part-turn valve actuator attachment

Documents
Document Sharing Hub

Full document details: BS EN ISO 5640:2024

National foreword

This British Standard is the UK implementation of EN ISO 5640:2024. It is identical to ISO 5640:2024. It supersedes BS EN 15081:2007, which is withdrawn.

The UK participation in its preparation was entrusted to Technical Committee PSE/18/5, Industrial valves, steam traps, actuators and safety devices against excessive pressure - Valve actuators.

A list of organizations represented on this committee can be obtained on request to its committee manager.

Contractual and legal considerations

This publication has been prepared in good faith, however no representation, warranty, assurance or undertaking (express or implied) is or will be made, and no responsibility or liability is or will be accepted by BSI in relation to the adequacy, accuracy, completeness or reasonableness of this publication. All and any such responsibility and liability is expressly disclaimed to the full extent permitted by the law.

This publication is provided as is, and is to be used at the recipient's own risk.

The recipient is advised to consider seeking professional guidance with respect to its use of this publication.

This publication is not intended to constitute a contract. Users are responsible for its correct application.

© The British Standards Institution 2024
Published by BSI Standards Limited 2024

ISBN 978 0 539 31455 7

ICS 23.060.01; 23.060.99

Compliance with a British Standard cannot confer immunity from legal obligations.

This British Standard was published under the authority of the Standards Policy and Strategy Committee on 30 November 2024.

Amendments/corrigenda issued since publication

Date	Text affected

Documents
Document Sharing Hub

Full document details: BS EN ISO 5640:2024

EUROPEAN STANDARD

NORME EUROPÉENNE

EUROPÄISCHE NORM

EN ISO 5640

November 2024

ICS 23.060.01

Supersedes EN 15081:2007

English Version

Industrial valves - Mounting kits for part-turn valve actuator attachment (ISO 5640:2024)

Robinetterie industrielle - Kits de montage de raccordement des actionneurs à fraction de tour (ISO 5640:2024)

Industriearmaturen - Montagesätze für Anschlüsse von Schwenkantrieben an Armaturen (ISO 5640:2024)

This European Standard was approved by CEN on 11 November 2024.

CEN members are bound to comply with the CEN/CENELEC Internal Regulations which stipulate the conditions for giving this European Standard the status of a national standard without any alteration. Up-to-date lists and bibliographical references concerning such national standards may be obtained on application to the CEN-CENELEC Management Centre or to any CEN member.

This European Standard exists in three official versions (English, French, German). A version in any other language made by translation under the responsibility of a CEN member into its own language and notified to the CEN-CENELEC Management Centre has the same status as the official versions.

CEN members are the national standards bodies of Austria, Belgium, Bulgaria, Croatia, Cyprus, Czech Republic, Denmark, Estonia, Finland, France, Germany, Greece, Hungary, Iceland, Ireland, Italy, Latvia, Lithuania, Luxembourg, Malta, Netherlands, Norway, Poland, Portugal, Republic of North Macedonia, Romania, Serbia, Slovakia, Slovenia, Spain, Sweden, Switzerland, Türkiye and United Kingdom.

EUROPEAN COMMITTEE FOR STANDARDIZATION
COMITÉ EUROPÉEN DE NORMALISATION
EUROPÄISCHES KOMITEE FÜR NORMUNG

CEN-CENELEC Management Centre: Rue de la Science 23, B-1040 Brussels

© 2024 CEN All rights of exploitation in any form and by any means reserved worldwide for CEN national Members.

Ref. No. EN ISO 5640:2024 E

Documents
Document Sharing Hub

Full document details: BS EN ISO 5640:2024

European foreword

The text of ISO 5640:2024 has been prepared by Technical Committee ISO/TC 153 "Valves" of the International Organization for Standardization (ISO) and has been taken over as EN ISO 5640:2024 by Technical Committee CEN/TC 69 “Industrial valves” the secretariat of which is held by AFNOR.

This European Standard shall be given the status of a national standard, either by publication of an identical text or by endorsement, at the latest by May 2025, and conflicting national standards shall be withdrawn at the latest by May 2025.

Attention is drawn to the possibility that some of the elements of this document may be the subject of patent rights. CEN shall not be held responsible for identifying any or all such patent rights.

This document supersedes EN 15081:2007.

Any feedback and questions on this document should be directed to the users’ national standards body/national committee. A complete listing of these bodies can be found on the CEN website.

According to the CEN-CENELEC Internal Regulations, the national standards organizations of the following countries are bound to implement this European Standard: Austria, Belgium, Bulgaria, Croatia, Cyprus, Czech Republic, Denmark, Estonia, Finland, France, Germany, Greece, Hungary, Iceland, Ireland, Italy, Latvia, Lithuania, Luxembourg, Malta, Netherlands, Norway, Poland, Portugal, Republic of North Macedonia, Romania, Serbia, Slovakia, Slovenia, Spain, Sweden, Switzerland, Türkiye and the United Kingdom.

Endorsement notice

The text of ISO 5640:2024 has been approved by CEN as EN ISO 5640:2024 without any modification.

Documents
Document Sharing Hub

Full document details: BS EN ISO 5640:2024

Contents

Page

Foreword ... **iv**

1 Scope ... **1**

2 Normative references ... **2**

3 Terms and definitions ... **2**

4 Design requirements ... **3**
4.1 General ... 3
4.2 Materials ... 3
4.3 Design temperature ... 3
4.4 Environmental corrosion protection ... 3
4.5 Mounting kit ... 4
4.5.1 Stiffness ... 4
4.5.2 Intermediate support style ... 4
4.6 Bolting ... 5
4.7 Coupling ... 6
4.8 Designation ... 6
4.9 Position indicator ... 6
4.10 Buried service ... 6
4.11 Safety requirement ... 6
4.12 Orientation ... 6
4.13 Additional means for support of the actuator ... 7
4.14 Valve/actuator package maintenance ... 7

5 Dimensions ... **7**
5.1 Bracket ... 7
5.2 Coupling design ... 9
5.2.1 General ... 9
5.2.2 Drive by key(s) ... 9
5.2.3 Drive by square head ... 9
5.2.4 Drive by flat head ... 9
5.2.5 Drive by improved flat head ... 9
5.2.6 Drive by involute spline ... 9
5.2.7 Other types of drive connections ... 9
5.3 Spools and adapter flanges ... 9

6 Marking ... **10**
6.1 General ... 10
6.2 Mandatory information ... 10
6.3 Optional information ... 10

7 Documentation ... **10**
7.1 Language ... 10
7.2 Product documentation ... 10

Annex A (normative) **Coupling clearance** ... **11**

Annex B (informative) **Proposed shaft details for ball and butterfly valves** ... **13**

Bibliography ... **16**

© ISO 2024 – All rights reserved

Documents
Document Sharing Hub
Full document details: BS EN ISO 5640:2024

Foreword

ISO (the International Organization for Standardization) is a worldwide federation of national standards bodies (ISO member bodies). The work of preparing International Standards is normally carried out through ISO technical committees. Each member body interested in a subject for which a technical committee has been established has the right to be represented on that committee. International organizations, governmental and non-governmental, in liaison with ISO, also take part in the work. ISO collaborates closely with the International Electrotechnical Commission (IEC) on all matters of electrotechnical standardization.

The procedures used to develop this document and those intended for its further maintenance are described in the ISO/IEC Directives, Part 1. In particular, the different approval criteria needed for the different types of ISO documents should be noted. This document was drafted in accordance with the editorial rules of the ISO/IEC Directives, Part 2 (see www.iso.org/directives).

ISO draws attention to the possibility that the implementation of this document may involve the use of (a) patent(s). ISO takes no position concerning the evidence, validity or applicability of any claimed patent rights in respect thereof. As of the date of publication of this document, ISO had not received notice of (a) patent(s) which may be required to implement this document. However, implementers are cautioned that this may not represent the latest information, which may be obtained from the patent database available at www.iso.org/patents. ISO shall not be held responsible for identifying any or all such patent rights.

Any trade name used in this document is information given for the convenience of users and does not constitute an endorsement.

For an explanation of the voluntary nature of standards, the meaning of ISO specific terms and expressions related to conformity assessment, as well as information about ISO's adherence to the World Trade Organization (WTO) principles in the Technical Barriers to Trade (TBT), see www.iso.org/iso/foreword.html.

This document was prepared by Technical Committee ISO/TC 153, *Valves*.

Any feedback or questions on this document should be directed to the user's national standards body. A complete listing of these bodies can be found at www.iso.org/members.html.

© ISO 2024 – All rights reserved

Documents
Document Sharing Hub
Full document details: BS EN ISO 5640:2024

Industrial valves — Mounting kits for part-turn valve actuator attachment

1 Scope

This document provides requirements for metallic mounting kits for part-turn valves and actuator attachments.

It includes all components transmitting torques from actuators to valves with a maximum flange torque up to 16 000 Nm (up to F30 flange type).

It applies to mounting kits for part-turn valves and actuators with integral attachment flanges and drive components as described in ISO 5211 (see Figure 1), when direct mounting of the actuator on valve is not practical. Figure 1 illustrates the two different types of mounting kits in the scope of this document.

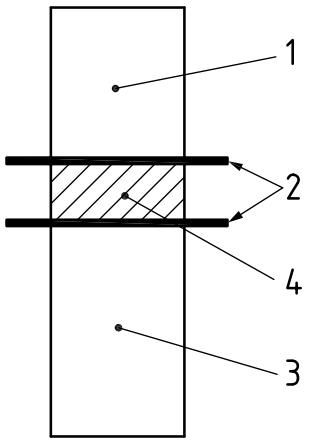

a) Direct interface with mounting kit

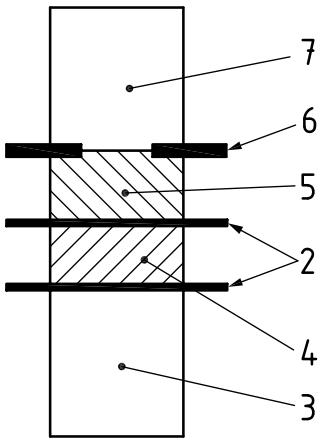

b) Direct interface with mounting kit (when combination of a multi-turn actuator and a gearbox)

Key

1 part-turn actuator
2 interface (see ISO 5211)
3 valve
4 mounting kit
5 gearbox
6 interface (see ISO 5210)
7 multi-turn actuator

Figure 1 — Mounting kit between part-turn actuator and valve

Stacking of mounting kits/intermediate supports is not within the scope of this document.

This document specifies methods for design and environmental corrosion protection.

When a reference is made to this document, all the requirements apply, unless otherwise agreed between the purchaser and the manufacturer/supplier, prior to order.

In this document, the term "valve" covers valve or shaft extension top-flange, and the term “actuator” covers part-turn actuator or combination of multi-turn actuator and gearbox.

Control valves are excluded from this document.

© ISO 2024 – All rights reserved

Documents
Document Sharing Hub
Full document details: BS EN ISO 5640:2024

2 Normative references

The following documents are referred to in the text in such a way that some or all of their content constitutes requirements of this document. For dated references, only the edition cited applies. For undated references, the latest edition of the referenced document (including any amendments) applies.

ISO 5211, *Industrial valves — Part-turn actuator attachments*

3 Terms and definitions

For the purposes of this document, the following terms and definitions apply.

ISO and IEC maintain terminology databases for use in standardization at the following addresses:

— ISO Online browsing platform: available at https://www.iso.org/obp

— IEC Electropedia: available at https://www.electropedia.org/

3.1
mounting kit
group of components comprising an *intermediate support* (3.2), bolting and optional *coupling* (3.3)

3.2
intermediate support
mechanical component (bracket, spool, adapter flange) that allows the attachment between a part-turn valve and actuator or gearbox

Note 1 to entry: For electric actuators refer to ISO 22153.

Note 2 to entry: For gearboxes refer to ISO 22109.

3.3
coupling
driven component that allows torque transmission from an actuator or gearbox driving component to the *valve shaft* (3.7)

3.4
coupling clearance
clearance to ensure that there is axial movement between the actuator or gearbox and the *valve shaft* (3.7) to avoid thrust being applied between the driving and driven components

Note 1 to entry: See Annex A.

3.5
part-turn actuator
actuator which transmits torque to the valve for a rotation of one revolution or less and does not have to withstand axial thrust

Note 1 to entry: A part-turn actuator may be a combination of a multi-turn actuator and part-turn gearbox.

3.6
valve top mounting face
feature of the valve body or an additional component which is part of the valve and which allows the attachment of actuating devices or *intermediate support* (3.2)

Note 1 to entry: For details on the valve top mounting face refer to ISO 5211.

3.7
valve shaft
valve stem
part of the valve transmitting the driving torque to the obturator

© ISO 2024 – All rights reserved

Documents
Document Sharing Hub
Full document details: BS EN ISO 5640:2024