BS EN ISO 772:2022

BSI Standards Publication

Hydrometry — Vocabulary and symbols

Documents
Document Sharing Hub

Full document details: BS EN ISO 772:2022

National foreword

This British Standard is the UK implementation of EN ISO 772:2022. It is identical to ISO 772:2022. It supersedes BS EN ISO 772:2011, which is withdrawn.

The UK participation in its preparation was entrusted to Technical Committee CPI/113, Hydrometry.

A list of organizations represented on this committee can be obtained on request to its committee manager.

Contractual and legal considerations

This publication has been prepared in good faith, however no representation, warranty, assurance or undertaking (express or implied) is or will be made, and no responsibility or liability is or will be accepted by BSI in relation to the adequacy, accuracy, completeness or reasonableness of this publication. All and any such responsibility and liability is expressly disclaimed to the full extent permitted by the law.

This publication is provided as is, and is to be used at the recipient's own risk.

The recipient is advised to consider seeking professional guidance with respect to its use of this publication.

This publication is not intended to constitute a contract. Users are responsible for its correct application.

© The British Standards Institution 2022
Published by BSI Standards Limited 2022

ISBN 978 0 580 97627 8

ICS 01.040.17; 17.120.20

Compliance with a British Standard cannot confer immunity from legal obligations.

This British Standard was published under the authority of the Standards Policy and Strategy Committee on 30 April 2022.

Amendments/corrigenda issued since publication

Date	Text affected

Documents
Document Sharing Hub

Full document details: BS EN ISO 772:2022

EUROPEAN STANDARD

NORME EUROPÉENNE

EUROPÄISCHE NORM

EN ISO 772

March 2022

ICS 01.040.17; 17.120.20

Supersedes EN ISO 772:2011

English Version

Hydrometry - Vocabulary and symbols (ISO 772:2022)

Hydrom?rie - Vocabulaire et symboles (ISO 772:2022)

Hydrometrie - Begriffe und Symbole (ISO 772:2022)

This European Standard was approved by CEN on 5 February 2022.

CEN members are bound to comply with the CEN/CENELEC Internal Regulations which stipulate the conditions for giving this European Standard the status of a national standard without any alteration. Up-to-date lists and bibliographical references concerning such national standards may be obtained on application to the CEN-CENELEC Management Centre or to any CEN member.

This European Standard exists in three official versions (English, French, German). A version in any other language made by translation under the responsibility of a CEN member into its own language and notified to the CEN-CENELEC Management Centre has the same status as the official versions.

CEN members are the national standards bodies of Austria, Belgium, Bulgaria, Croatia, Cyprus, Czech Republic, Denmark, Estonia, Finland, France, Germany, Greece, Hungary, Iceland, Ireland, Italy, Latvia, Lithuania, Luxembourg, Malta, Netherlands, Norway, Poland, Portugal, Republic of North Macedonia, Romania, Serbia, Slovakia, Slovenia, Spain, Sweden, Switzerland, Turkey and United Kingdom.

EUROPEAN COMMITTEE FOR STANDARDIZATION
COMITÉ EUROPÉEN DE NORMALISATION
EUROPÄISCHES KOMITEE FÜR NORMUNG

CEN-CENELEC Management Centre: Rue de la Science 23, B-1040 Brussels

© 2022 CEN All rights of exploitation in any form and by any means reserved worldwide for CEN national Members.

Ref. No. EN ISO 772:2022 E

Documents
Document Sharing Hub

Full document details: BS EN ISO 772:2022

European foreword

This document (EN ISO 772:2022) has been prepared by Technical Committee ISO/TC 113 "Hydrometry" in collaboration with Technical Committee CEN/TC 318 “Hydrometry” the secretariat of which is held by BSI.

This European Standard shall be given the status of a national standard, either by publication of an identical text or by endorsement, at the latest by September 2022, and conflicting national standards shall be withdrawn at the latest by September 2022.

Attention is drawn to the possibility that some of the elements of this document may be the subject of patent rights. CEN shall not be held responsible for identifying any or all such patent rights.

This document supersedes EN ISO 772:2011.

Any feedback and questions on this document should be directed to the users’ national standards body/national committee. A complete listing of these bodies can be found on the CEN website.

According to the CEN-CENELEC Internal Regulations, the national standards organizations of the following countries are bound to implement this European Standard: Austria, Belgium, Bulgaria, Croatia, Cyprus, Czech Republic, Denmark, Estonia, Finland, France, Germany, Greece, Hungary, Iceland, Ireland, Italy, Latvia, Lithuania, Luxembourg, Malta, Netherlands, Norway, Poland, Portugal, Republic of North Macedonia, Romania, Serbia, Slovakia, Slovenia, Spain, Sweden, Switzerland, Turkey and the United Kingdom.

Endorsement notice

The text of ISO 772:2022 has been approved by CEN as EN ISO 772:2022 without any modification.

Documents
Document Sharing Hub

Full document details: BS EN ISO 772:2022

Contents

Page

Foreword ..... **iv**
Introduction ..... **v**
1 Scope **1**
2 Normative references **1**
3 Terms and definitions **1**
4 Terms related to velocity-area methods **13**
5 Terms related to flow measurement structures **17**
6 Terms related to dilution method **30**
7 Terms related to instruments and equipment **32**
8 Terms related to sediment transport **38**
9 Terms related to precipitation **44**
10 Terms related to snow **45**
11 Terms related to groundwater **51**
12 Terms related to uncertainties in hydrometric determinations **61**
Annex A (informative) **Symbols used in hydrometry** **70**
Bibliography **73**
Index **74**

© ISO 2022 – All rights reserved

Documents
Document Sharing Hub
Full document details: BS EN ISO 772:2022

Foreword

ISO (the International Organization for Standardization) is a worldwide federation of national standards bodies (ISO member bodies). The work of preparing International Standards is normally carried out through ISO technical committees. Each member body interested in a subject for which a technical committee has been established has the right to be represented on that committee. International organizations, governmental and non-governmental, in liaison with ISO, also take part in the work. ISO collaborates closely with the International Electrotechnical Commission (IEC) on all matters of electrotechnical standardization.

The procedures used to develop this document and those intended for its further maintenance are described in the ISO/IEC Directives, Part 1. In particular, the different approval criteria needed for the different types of ISO documents should be noted. This document was drafted in accordance with the editorial rules of the ISO/IEC Directives, Part 2 (see www.iso.org/directives).

Attention is drawn to the possibility that some of the elements of this document may be the subject of patent rights. ISO shall not be held responsible for identifying any or all such patent rights. Details of any patent rights identified during the development of the document will be in the Introduction and/or on the ISO list of patent declarations received (see www.iso.org/patents).

Any trade name used in this document is information given for the convenience of users and does not constitute an endorsement.

For an explanation of the voluntary nature of standards, the meaning of ISO specific terms and expressions related to conformity assessment, as well as information about ISO's adherence to the World Trade Organization (WTO) principles in the Technical Barriers to Trade (TBT), see www.iso.org/iso/foreword.html.

This document was prepared by Technical Committee ISO/TC 113, *Hydrometry,* in collaboration with the European Committee for Standardization (CEN) Technical Committee CEN/TC 318, *Hydrometry,* in accordance with the Agreement on technical cooperation between ISO and CEN (Vienna Agreement).

This sixth edition cancels and replaces the fifth edition (ISO 772:2011) which has been technically revised. The main changes compared with the previous edition are as follows:

— terms related to precipitation have been added in a new Clause 9;

— additional terms have been added in Clause 10;

— Figures 1, 3, 4, 5, 6, 9, 11 and 12 have been modified and updated.

Any feedback or questions on this document should be directed to the user's national standards body. A complete listing of these bodies can be found at www.iso.org/members.html.

© ISO 2022 – All rights reserved
Documents
Document Sharing Hub
Full document details: BS EN ISO 772:2022

Introduction

In the preparation of this document, the following principles were adopted wherever possible:

a) to standardize suitable terms and symbols without perpetuating unsuitable ones;

b) to discard any term or symbol with differing meanings in different countries, or for different people, or for the same person at different times, and to replace that term or symbol by one which has an unequivocal meaning;

c) to exclude terms which are self-evident.

Terms in existing International Standards have been included as much as possible; however, these terms can be subject to future amendments.

NOTE Similar or identical terms can have separate definitions under the different categories.

It is recognized that it is not possible to produce a complete set of definitions which will be universally acceptable, but it is hoped that the definitions provided and the symbols used will find widespread acceptance and that their use will lead to a better understanding of hydrometric practices.

The terminology entries are presented in systematic order, grouped into sections according to particular methods of determination or in relation to particular subjects. Annex A lists the symbols used in this document.

The structure of each entry is in accordance with the ISO 10241 series. Country codes are in accordance with ISO 3166-1.

© ISO 2022 – All rights reserved

Documents
Document Sharing Hub
Full document details: BS EN ISO 772:2022

Documents
Document Sharing Hub

Hydrometry — Vocabulary and symbols

1 Scope

This document defines terms and symbols used in standards in the field of hydrometry.

2 Normative references

There are no normative references in this document.

3 Terms and definitions

ISO and IEC maintain terminological databases for use in standardization at the following addresses:

— ISO Online browsing platform: available at https://www.iso.org/obp

— IEC Electropedia: available at http://www.electropedia.org/

3.1
hydrometry
science and practice of measuring the components of the *hydrological cycle* (3.92), including *rainfall* (9.10), *water level* (3.64), flow and *sediment transport* (8.2) of surface waters, and *groundwater* (11.1) characteristics

3.2
hydrology
science that deals with the waters above and below the land surfaces of the Earth, their occurrence, circulation and distribution, their properties and their reaction with the environment

3.3
flow
water flowing on or below the land surface under gravitational influence

3.4
runoff
volume of water flowing through a given channel cross-section related to a given *drainage basin* (3.103) in a defined period of time

3.5
discharge
Q
volume of water flowing through a given channel cross-section in unit time

3.6
current
directed movement of water

3.7
steady flow
flow (3.3) in which parameters [such as *velocity* (3.113), pressure, density and temperature] are constant with respect to time

© ISO 2022 – All rights reserved

Documents
Document Sharing Hub
Full document details: BS EN ISO 772:2022

3.8
unsteady flow
flow (3.3) in which one or more parameters [such as *velocity* (3.113), pressure, density and temperature] change with respect to time

3.9
uniform flow
flow (3.3) in which the magnitude and direction of flow at a given moment are constant with respect to distance

Note 1 to entry: For uniform flow, the velocity vector is constant along every stream line. Uniform flow is possible only in an *open channel* (3.19) of constant slope and cross-section.

3.10
non-uniform flow
flow (3.3) in which the magnitude and direction of flow at a given moment are changing with respect to distance

3.11
critical flow
<open channel flow> *flow* (3.3) in an *open channel* (3.19) in which the specific energy is a minimum for a given *discharge* (3.5)

Note 1 to entry: Under this condition, the *Froude number* (3.89) is equal to unity and small surface disturbances cannot travel upstream.

3.12
subcritical flow
flow (3.3) in an *open channel* (3.19) at less than *critical velocity* (3.17), which has a *Froude number* (3.89) of less than unity and in which small surface disturbances can travel upstream

3.13
supercritical flow
flow (3.3) in an *open channel* (3.19) at more than *critical velocity* (3.17), which has a *Froude number* (3.89) of greater than unity and in which small surface disturbances cannot travel upstream

3.14
transverse flow
lateral flow
flow (3.3) horizontally perpendicular to the main direction of flow

Note 1 to entry: Transverse (lateral) flow is frequently associated with secondary flow.

Note 2 to entry: Transverse (lateral) flow in *open channels* (3.19) with a curved plan form causes superelevation of the water surface at the outside of the bend.

3.15
stratification
state of a water body that consists of two or more layers arranged according to their density, the lightest layer being on top and the heaviest at the bottom

3.16
critical depth
depth (3.78) of *flow* (3.3) at which *critical flow* (3.11) occurs

3.17
critical velocity
velocity (3.113) of *flow* (3.3) that has minimum specific energy for a given *discharge* (3.5) or has unit *Froude number* (3.89)

© ISO 2022 – All rights reserved
Documents
Document Sharing Hub
Full document details: BS EN ISO 772:2022

3.18
channel
course of a *river* (3.27), *stream* (3.26) or other watercourse

3.19
open channel
longitudinal boundary surface consisting of the bed and banks or sides within which water flows with a free surface

3.20
canal
man-made *channel* (3.18), usually of regular cross-sectional shape

3.21
stable channel
open channel (3.19) in which the bed and the sides remain essentially stable over a substantial period of time in the *reach* (3.34) under consideration, and in which the scour and *deposition* (10.5) during the rising and falling stages are negligible

3.22
unstable channel
open channel (3.19) that changes frequently and significantly in its plan form and/or cross-sectional form for the *reach* (3.34) under consideration

3.23
tidal channel
open channel (3.19) in which the *flow* (3.3) is subject to tidal influence

3.24
tide
periodic rise and fall of water due principally to the gravitational attraction of the sun and the moon

3.25
estuary
lower tidal *reaches* (3.34) of a *river* (3.27) that is freely connected with the sea which receives fresh water supplies from upland drainage areas

3.26
stream
water course, water flowing in an *open channel* (3.19)

3.27
river
large natural water course

3.28
large river
major river
large natural water course that generally flows into the sea

3.29
creek
brook
small natural water course

3.30
torrent
small natural water course that is characterized by steep slopes and significant rapid changes in *discharge* (3.5) and that can transport considerable volumes of solid material

© ISO 2022 – All rights reserved

Documents
Document Sharing Hub
Full document details: BS EN ISO 772:2022

3.31
alluvial river
river (3.27) which flows through alluvium formed from its own deposits

3.32
incised river
river (3.27) which has formed its *channel* (3.18) by a process of erosion

3.33
braided river
river (3.27) characterized by a wide and shallow *open channel* (3.19) in which *flow* (3.3) passes through a number of small interlaced *channels* (3.18)

3.34
reach
length of *open channel* (3.19) between two defined cross-sections

3.35
meandering channel
water course formed by natural flow processes and movement of sediments following generally an alternating regular sinuous path

3.36
thalweg
line joining the lowest points of successive cross-sections of a water course

3.37
unit discharge
discharge per unit width
q_u
discharge (3.5) through a unit width of a given vertical section

3.38
yield specific discharge
q
discharge (3.5) per unit area of catchment or *aquifer* (11.15)

3.39
stream gauging
discharge measurement
flow measurement
stream flow measurement
river gauging
all of the operations necessary for the measurement of *discharge* (3.5) of a *stream* (3.26)

3.40
gauge
device installed at a gauging station for measuring the level of the surface of water relative to a datum

3.41
left bank
bank to the left of an observer looking downstream

3.42
right bank
bank to the right of an observer looking downstream

© ISO 2022 – All rights reserved
Documents
Document Sharing Hub
Full document details: BS EN ISO 772:2022

3.43
channel bed
invert
stream bed
stream bottom
channel bottom
lower part of the stream channel situated between the banks

3.44
bed slope
bottom slope
S_o
difference in elevation of the bed per unit horizontal distance, measured in the direction of *flow* (3.3)

Note 1 to entry: The slope is usually mathematically negative in the direction of flow.

3.45
bed profile
shape of the bed in a longitudinal vertical plane

3.46
side slope
difference in elevation between the bottom and top of a bank per unit horizontal distance

3.47
surface slope
S_w
inclination of the surface of the *stream* (3.26) in a *reach* (3.34) measured in the direction of *flow* (3.3)

3.48
fall
difference in elevation of the water surface between the extremities of a defined *reach* (3.34) at a given instant of time

EXAMPLE As recorded at a *slope station* (3.71).

3.49
top width
width of the *open channel* (3.19) measured across the *stream* (3.26) at the water surface normal to the direction of *flow* (3.3)

3.50
wetted perimeter
P_w
contact length between a *stream* (3.26) of flowing water and its containing *open channel* (3.19), measured in a direction normal to the *flow* (3.3)

3.51
wetted cross-section
<of a stream> section normal to the mean direction of *flow* (3.3) bounded by the free surface and *wetted perimeter* (3.50)

3.52
gauging section
measuring section
section at which *discharge* (3.5) measurements are taken

3.53
high water mark
flood mark
mark left on a structure or any other object indicating exceptional stages of flood

© ISO 2022 – All rights reserved

Documents
Document Sharing Hub
Full document details: BS EN ISO 772:2022

3.54
debris line
trash line
traces of any kind left on the banks or obstacles or flood plain by a flood

Note 1 to entry: The debris line may be used to determine the highest level attained by the water surface during a flood.

3.55
surface velocity
flow (3.3) *velocity* (3.113) at a given point on the surface

3.56
mean velocity
<at a cross-section> *flow* (3.3) *velocity* (3.113) at a given cross-section of a *stream* (3.26), obtained by dividing the *discharge* (3.5) by the cross-sectional area

3.57
slush ice
mass of loosely packed *anchor ice* (3.105) that is released from the bottom, or *frazil ice* (3.104) that floats or accumulates under *surface ice* (3.107)

3.58
velocity head
theoretical vertical height to which liquid particles can be elevated by kinetic energy

Note 1 to entry: It is expressed as the square of the *velocity* (3.113) divided by twice the acceleration due to gravity.

3.59
gauged head
elevation of the free surface above the horizontal datum of a section

3.60
total head
energy head
H
sum of the elevation of the free surface above the horizontal datum of a section plus the *velocity head* (3.58) based on the *mean velocity* (3.56) at that section

Note 1 to entry: The total head, *H*, is given by the following formula:

$$H = h + \alpha \frac{\bar{v}^2}{2g}$$

where

h is the gauged head of *water level* (3.64);

$\bar{v}$ is the mean velocity of the water;

α is the Coriolis coefficient;

g is the acceleration due to gravity.

Note 2 to entry: The Coriolis coefficient ($\alpha \geq 1$), also known as “energy coefficient” or “energy correction factor”, takes into account the non-uniform velocity distribution. In many cases, α is assumed to equal unity.

© ISO 2022 – All rights reserved
Documents
Document Sharing Hub
Full document details: BS EN ISO 772:2022

3.61
total head line
energy head line
plot of the *total head* (3.60) in the direction of *flow* (3.3)

3.62
energy gradient
difference in *total head* (3.60) per unit horizontal distance, measured in the direction of *flow* (3.3)

3.63
energy loss
head loss
difference in *total head* (3.60) between two cross-sections in the direction of *flow* (3.3)

3.64
water level
stage
gauge height
elevation of the free surface of a *stream* (3.26), lake or reservoir relative to a specified datum

3.65
reference gauge
stage gauge that *discharge* (3.5) is normally linked to

3.66
stage-discharge relation
rating curve
rating table
equation, curve or table that expresses the relation between the stage and the *discharge* (3.5) in an *open channel* (3.19) at a given cross-section

3.67
hydrograph
<open channel flow> graphical representation of changes of hydrometric parameters with respect to time

Note 1 to entry: Typically, stage and discharge hydrographs are used for open channel flows.

3.68
cumulative volume curve
curve in which the cumulative value of a hydrometric parameter is plotted against time

Note 1 to entry: Integral of the *hydrograph* (3.67), such as cumulative discharge curve.

3.69
storage curve
table
curve depicting the volume of stored water plotted against *water level* (3.64)

3.70
gauging station
site on a *stream* (3.26), *river* (3.27) or lake at which systematic measurements of *water level* (3.64), *velocity* (3.113) or *discharge* (3.5) or any combination of the three are made

3.71
slope station
twin-gauge station
gauging station (3.70) at which two water-level *gauges* (3.40) define a *reach* (3.34) for measurement of water-surface slope as an essential parameter for establishing a *stage-discharge relation* (3.66)

© ISO 2022 – All rights reserved

Documents
Document Sharing Hub
Full document details: BS EN ISO 772:2022

3.72
control
physical properties of a cross-section or a *reach* (3.34) of an *open channel* (3.19), either natural or artificial, that govern the relation between stage and *discharge* (3.5) at a location in the open channel

3.73
rating
relation between *discharge* (3.5) and other variables, or the taking of observations and making of calculations needed to establish the relation

3.74
unit-fall rating
relation between stage and *discharge* (3.5) when the *fall* (3.48) is equal to one

3.75
afflux
rise in *water level* (3.64) immediately upstream of, and due to, an obstruction

3.76
backwater curve
profile of water surface, along an *open channel* (3.19), from the raised surface at an obstruction or confluence to the point upstream at which the *flow* (3.3) is at normal *depth* (3.78)

Note 1 to entry: The term is also used to denote all liquid surface profiles that are non-uniform with respect to distance upstream or downstream. However, this usage is deprecated.

3.77
drawdown curve
profile of the liquid surface when its *surface slope* (S_w) (3.47) exceeds the *bed slope* (S_o) (3.44)

Note 1 to entry: From the point at which the bed slope increases, or bed level drops abruptly, to the point at which normal *depth* (3.78) occurs, the profile along an *open channel* (3.19) is convex upwards in an upstream direction and concave upwards in a downstream direction.

3.78
depth
D
linear dimension measured in the vertical direction from the water surface to the bed

3.79
peak stage
maximum instantaneous stage during a given period

3.80
friction
drag
boundary shear resistance that opposes the *flow* (3.3) of a liquid

3.81
conveyance
K
carrying capacity of a *channel* (3.18)

Note 1 to entry: The term "conveyance factor" is also used, e.g. in the formula:

$$K = QS^{-1/2}$$

where

K is the conveyance factor;

© ISO 2022 – All rights reserved
Documents
Document Sharing Hub
Full document details: BS EN ISO 772:2022

Q is the total *discharge* (3.5);

S is the *energy gradient* (3.62).

3.82
hydraulic jump
sudden transition from *supercritical flow* (3.13) to *subcritical flow* (3.12)

Note 1 to entry: Immediately upstream of the hydraulic jump, the *velocity* (3.113) and the *depth* (3.78) are respectively greater and less than their critical values. Beyond the jump, the velocity and the depth are respectively less and greater than their critical values.

3.83
hydraulic mean depth
mean depth
D_m
area of the cross-section of water flowing in an *open channel* (3.19) divided by the width of the open channel at the water surface

3.84
hydraulic radius
r_h
wetted cross-sectional area of water flowing in an *open channel* (3.19) divided by the length of the *wetted perimeter* (3.50) at that cross-section

3.85
gauge datum
elevation of the zero of the *gauge* (3.40) to which the level of the liquid surface is referred

Note 1 to entry: The gauge datum is related to a *benchmark* (3.86).

3.86
benchmark
permanent mark, the elevation of which should be related, where practicable, to a national datum

3.87
gauge/float well
stilling well/tube
chamber open to the atmosphere and connected with the *stream* (3.26) in such a way as to permit the measurement of the *water level* (3.64) in relatively still water

3.88
roughness coefficient
coefficient that characterizes the roughness of the channel cross-section and which is taken into account when computing the resistance to *flow* (3.3) or the *energy gradient* (3.62)

Note 1 to entry: The common types are the Manning's/Strickler n, Chezy C or an element roughness height, k.

3.89
Froude number
Fr
mean velocity (3.56) divided by the square root of the product of the *hydraulic mean depth* (3.83) and the acceleration due to gravity

$$Fr = \frac{\bar{v}}{(gD_m)^{1/2}}$$

where

$\bar{v}$ is the mean velocity of the liquid;

© ISO 2022 – All rights reserved

Documents
Document Sharing Hub
Full document details: BS EN ISO 772:2022

g is the acceleration due to gravity;

D_m is the hydraulic mean depth of the cross-section.

Note 1 to entry: The Froude number is dimensionless.

3.90
Reynolds number
Re
ratio of the forces of inertia to forces of *viscosity* (11.68)

Note 1 to entry: For *open channels* (3.19):

$$Re = \frac{\bar{v} r_h}{\eta}$$

where

$\bar{v}$ is the *mean velocity* (3.56) of the liquid;

r_h is the *hydraulic radius* (3.84) of the cross-section;

η is the *kinematic viscosity* (11.69) of the liquid.

Note 2 to entry: The Reynolds number is dimensionless.

3.91
free surface flow
flow (3.3) within a closed or open conduit, under gravity and having a free surface

Note 1 to entry: Where the flow exceeds the free surface capacity of the conduit, the flow will become surcharged with the consequent disappearance of the free surface. Instances of surcharging of short duration do not normally affect the overall concept of free surface flow in closed conduits.

3.92
hydrological cycle
constant movement of water in all states of its form, above, on and below the Earth's surface

3.93
hydrogeology
study of subsurface water in its geological context

3.94
live storage
reservoir storage which can be drawn off for users downstream

3.95
total storage
reservoir storage between the lowest bed level and the top *water level* (3.64)

3.96
flood storage
volume of water temporarily held above the top *water level* (3.64) of a reservoir during a flood event

Note 1 to entry: Flood storage is not retained in the reservoir but is discharged through an overflow until the normal top water level is reached.

© ISO 2022 – All rights reserved
Documents
Document Sharing Hub
Full document details: BS EN ISO 772:2022

3.97
standing wave
stationary wave
curved symmetrically shaped wave on the water surface and on the *channel bed* (3.43) that is virtually stationary

Note 1 to entry: When standing waves form, the water surface and the bed surfaces are roughly parallel and in phase.

3.98
tributary
surface or underground *stream* (3.26) which contributes its water, continuously or intermittently, to another stream

3.99
river delta
reach (3.34) of a *river* (3.27) when it approaches a body of quieter water with very gradual *bed slope* (S_0) (3.44) and *surface slope* (S_w) (3.47), and, at low *velocity* (3.113), deposits its sediment and divides out into *channels* (3.18) on either side of the deposits, resulting in the formation of deltas

3.100
annual flood
highest momentary peak *discharge* (3.5), recorded at the respective point of observation, which is equalled or exceeded once every year

3.101
annual storage within-the-year storage
difference between the maximum and minimum volumes in storage over a year of reservoir operation

3.102
base flow
sustained flow of a *stream* (3.26) resulting from outflow of *groundwater* (11.1) and from drainage of large lakes and swamps

Note 1 to entry: Base flow includes water sustained in *glaciers* (10.9), snow and other sources, not a result of direct *runoff* (3.4).

3.103
drainage basin
catchment area
part of the land area enclosed by a topographic divide from which direct surface *runoff* (3.4) from *precipitation* (9.9) drains by gravity into a *stream* (3.26) or other water body

3.104
frazil ice
fine spicules, plates or discoids of ice suspended in water that are generally formed by the supercooling of turbulent water

Note 1 to entry: Frazil ice may float or accumulate under *surface ice* (3.107) or adhere to the *channel bed* (3.43) as *anchor ice* (3.105).

3.105
anchor ice
submerged ice found attached to the bed, irrespective of the nature of its formation

3.106
rime ice
white mass of tiny ice crystals or granular ice tufts formed on exposed objects due to atmospheric moisture

© ISO 2022 – All rights reserved

Documents
Document Sharing Hub
Full document details: BS EN ISO 772:2022

3.107
surface ice
ice cover
ice sheet
layer of ice formed on the surface of a lake or *river* (3.27)

3.108
flow regime
state of *flow* (3.3) in alluvial *streams* (3.26) characterized by a bed configuration of *ripples* (3.111), *dunes* (3.109) (lower regime), plane bed (transition), *standing waves* (3.97) and *antidunes* (3.110) (upper regime)

Note 1 to entry: The lower-regime flow is subcritical. The upper-regime flow is supercritical.

3.109
dune
large bed form having a triangular profile, a gentle upstream slope and a steep downstream slope

Note 1 to entry: Dunes are formed in quiet flow and thus are out of phase with any possible water surface disturbance they produce. They travel slowly downstream as sand is moved across their comparatively gentle upstream slopes and deposited on their steeper downstream slopes.

3.110
antidune
bed form of a curved symmetrically shaped sand or gravel wave that may move upstream, remain stationary or move downstream

Note 1 to entry: Antidunes are curved in a wave train but they are in phase and interact strongly with gravity water surface waves.

3.111
ripple
small triangular-shaped bed form similar to a *dune* (3.109)

Note 1 to entry: Ripples have much smaller and more uniform amplitudes and lengths than dunes. Ripple wavelengths are less than 0,6 m and wave heights are less than 0,06 m.

3.112
transition
crossover
inflection *reach* (3.34) between two meander loops in which the main *flow* (3.3) crosses from one side of the *channel* (3.18) to the other

Note 1 to entry: The *depth* (3.78) of flow in a transition is usually reduced from normal depth and is more uniform than in the curved reach.

3.113
velocity
speed of *flow* (3.3) past a point in a specified direction

3.114
gauge height of zero flow
highest point on the *thalweg* (3.36) downstream from the *gauge* (3.40) in a natural or artificial *channel* (3.18)

3.115
shift adjustment
correction made to the recorded *water level* (3.64) to compensate for vertical movement of the bed or for shifting of the control reach

© ISO 2022 – All rights reserved
Documents
Document Sharing Hub
Full document details: BS EN ISO 772:2022

3.116
shift diagram
curve or set of curves expressing the relation between *water level* (3.64) and *shift adjustment* (3.115) for a given *rating* (3.73)

3.117
turbulent flow
flow (3.3) in which water particles move in irregular paths that is not laminar or streamline flow and for which the *Reynolds number* (3.90) is greater than the critical Reynolds number

3.118
laminar flow
flow (3.3) of a fluid in which the viscous forces are predominant and in which, in channel flow, the fluid particles move in approximately definite and relatively smooth paths with no significant transverse mixing

Note 1 to entry: The *Reynolds number* (3.90) is smaller than 500 to 2 000 in flow channels and smaller than 1 to 10 in flow through porous media.

Note 2 to entry: Groundwater flow is laminar flow under natural conditions.

4 Terms related to velocity-area methods

4.1
current-meter
instrument for measuring water *velocity* (3.113)

4.2
drift
<measuring boat> distance that a measuring boat travels during the time taken to make a stationary *velocity* (3.113) observation/measurement

4.3
period of pulsation
average period of a cycle of pulsation during which the *velocity* (3.113) in the cross-section fluctuates between limiting high and low values

4.4
sounding
operation of measuring the *depth* (3.78) from the free surface to the bed

4.5
air line correction
correction to the *sounding line* (7.16) measurement applied to that part of the sounding line above the liquid surface

Note 1 to entry: See Figure 1.

© ISO 2022 – All rights reserved

Documents
Document Sharing Hub
Full document details: BS EN ISO 772:2022

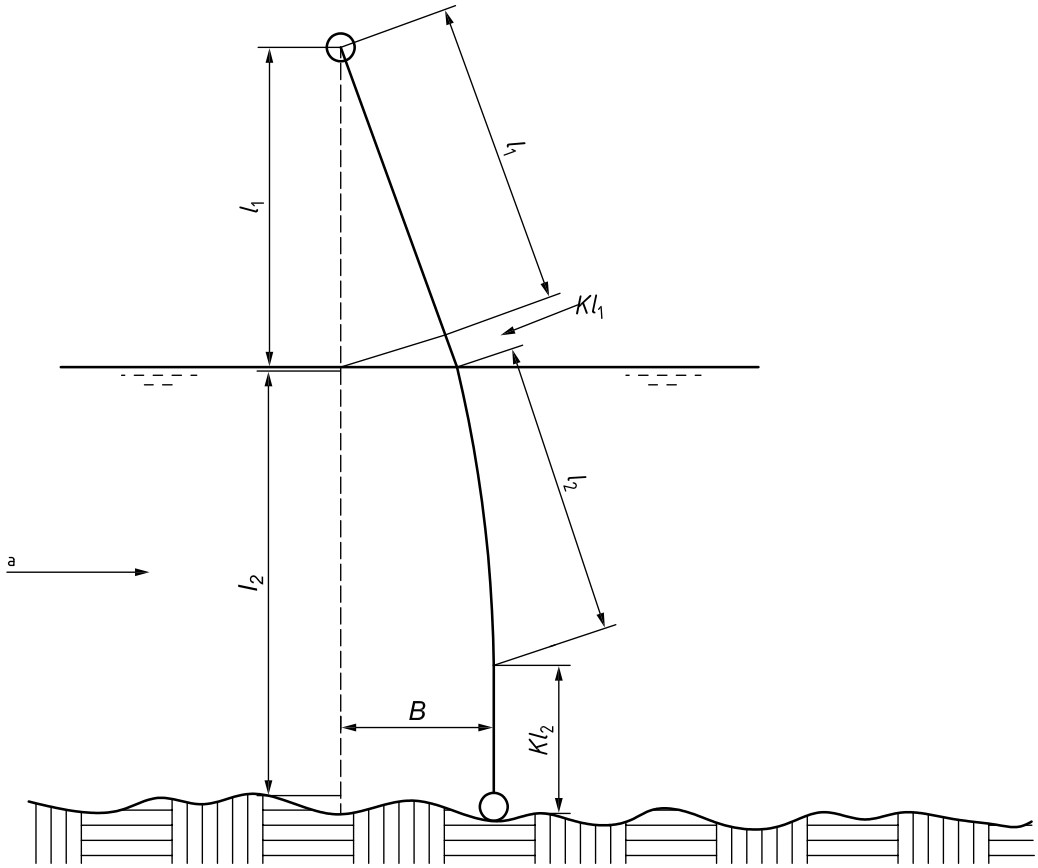

Key

kl_1	*air line correction* (4.5)	B	*drift* (4.2)
kl_2	*wet line correction* (4.6)	a	Direction of flow.

Figure 1 — Sounding line corrections

4.6
wet line correction
correction to the *sounding line* (7.16) measurement applied to that part of the sounding line below the liquid surface

Note 1 to entry: See Figure 1.

4.7
standard current-meter
calibrated *current-meter* (4.1) used as a basis of comparison with other current-meters

4.8
velocity integration method
<velocity-area measurement> method of measuring the *velocity* (3.113) along a *vertical* (4.29), involving the raising and lowering of a *current-meter* (4.1) at a constant rate through the entire *depth* (3.78) of the vertical

4.9
point velocity method
method of measuring the *velocity* (3.113) along a *vertical* (4.29) by placing a *current-meter* (4.1) at a number of designated points in the vertical

Note 1 to entry: The velocity is usually measured at one, two, three, five or six points on the vertical.

© ISO 2022 – All rights reserved
Documents
Document Sharing Hub
Full document details: BS EN ISO 772:2022

4.10
one-point method
method in which observations of *velocity* (3.113) are made in each *vertical* (4.29) at one point below the surface

4.11
multi-point method
method in which observations of *velocity* (3.113) are made in each *vertical* (4.29) at two points or more points (up to six) below the surface

4.12
moving boat method
method of measuring *discharge* (3.5) from a boat by traversing the *stream* (3.26) along the *gauging section* (3.52) while continuously measuring *velocity* (3.113), *depth* (3.78) and distance travelled, and angle of current velocity

4.13
cubature
numerical technique for computing *discharge* (3.5) in a *tidal channel* (3.23) at a cross-section from the rates of change in volume of water up to the tidal limit, with algebraic allowance for the fresh water discharges entering the channel

Note 1 to entry: The maximum volume is usually that occurring at high water of spring *tide* (3.24).

4.14
looped stage-discharge curve
hysteresis of the stage-discharge relation
effect on the *stage-discharge relation* (3.66) at a *gauging station* (3.70) where, for the same *water level* (3.64), the *discharge* (3.5) on the rising stage is different from that on the falling stage

4.15
sensitivity of the stage-discharge relation
measure of the change in stage of a *gauging station* (3.70) due to a change in *discharge* (3.5)

Note 1 to entry: When a small change in discharge produces a relatively large change in stage, the relation is said to be sensitive. When a large change in discharge produces a relatively small change in stage, the relation is said to be non-sensitive.

4.16
stilling well lag
difference at a given instant between the channel stage and the stilling well stage

4.17
stage fall-discharge relation
slope-stage-discharge relation
family of curves that expresses the relationship between the free water surface slope (S_w) stage and *discharge* (3.5) in a given *reach* (3.34) of an *open channel* (3.19) subject to variable backwater

4.18
seiche
oscillation of the surface of a liquid caused mainly by winds and variations in atmospheric pressure

4.19
salt-water wedge
wedge-like intrusion of a large mass of salt water flowing in from the sea under the fresh water in a tidal waterway

4.20
flood flow
flow (3.3) corresponding to or exceeding the natural *bankfull stage* (4.21)

© ISO 2022 – All rights reserved

Documents
Document Sharing Hub
Full document details: BS EN ISO 772:2022

4.21
bankfull stage
water level (3.64) at which an open watercourse just overflows its natural banks

4.22
tidal amplitude
one-half of the difference in height between consecutive high water and low water, hence half the *tide* (3.24) range

4.23
tidal prism
volume of water flowing into a *tidal channel* (3.23) on high *tide* (3.24)

4.24
index velocity method
method used to compute the *discharge* (3.5) by multiplying mean channel *velocity* (3.113) and cross-sectional area using outputs from index velocity rating and cross-sectional area, which are derived from stage-area rating, respectively

4.25
rating change
any change in the *stage-discharge relation* (3.66) due to temporary or permanent, sudden or gradual modifications of the *controls* (3.72)

4.26
rating shift
correction of the *stage-discharge relation* (3.66), usually the offsets of one or several *controls* (3.72) to account for a *rating change* (4.25)

4.27
velocity-area method
method of determining *discharge* (3.5) from the area of the cross-section, bounded by the *wetted perimeter* (3.50) and the free surface, while integrating the component *velocities* (3.113) in the cross-section

4.28
slope-area method
indirect method of determining *discharge* (3.5) in a *reach* (3.34) which is based on the friction (energy) slope (S), the reach roughness, the *wetted perimeters* (3.50) and the flow areas of the various *wetted cross-sections* (3.51) in the reach

4.29
vertical
vertical line on which *velocity* (3.113) measurements or *depth* (3.78) measurements are made

4.30
vertical velocity curve
vertical velocity distribution
variation in *velocity* (3.113) in a *stream* (3.26) or *river* (3.27) between the surface and bed which can be represented as a curve for that specific *vertical* (4.29)

4.31
vertical velocity coefficient
coefficient applied to a single velocity determination at any *depth* (3.78) on a vertical to infer the *mean velocity* (3.56) on that *vertical* (4.29)

© ISO 2022 – All rights reserved
Documents
Document Sharing Hub
Full document details: BS EN ISO 772:2022

4.32
reference current-meter
current-meter (4.1) that is immersed at a fixed position in the cross-section during the *discharge* (3.5) measurement

Note 1 to entry: For slight changes in discharge during the gauging operation, it is assumed that the change in *velocity* (3.113) indicated by the reference current-meter is proportional to the change in discharge.

4.33
float gauging
measurement of *velocity* (3.113) of a *stream* (3.26) by means of a *float* (7.19) or floats

4.34
mean section segment
area bounded by two consecutive *verticals* (4.29) in a cross-section, the bed of the *open channel* (3.19) and the water surface

Note 1 to entry: See Figure 2.

4.35
mid-section segment
area at a *vertical* (4.29) defined by the *depth* (3.78) at that vertical multiplied by one-half of the distance between the preceding and succeeding verticals

Note 1 to entry: See Figure 2.

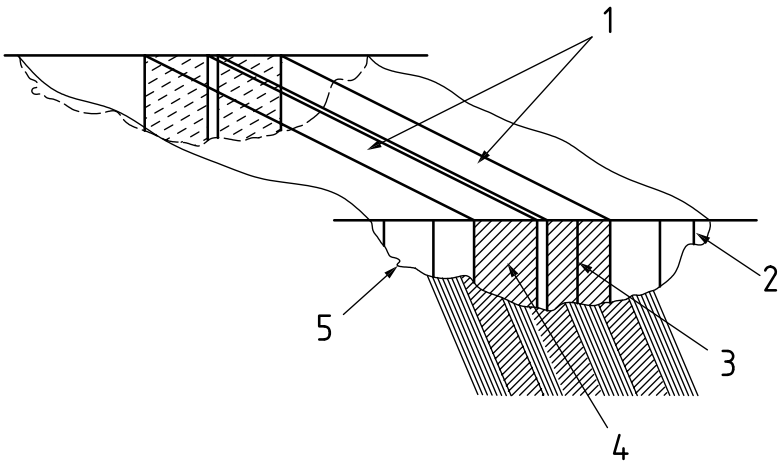

Key

1 stream panels
2 *vertical* (4.29)
3 *mid-section segment* (4.35)
4 *mean section segment* (4.34)
5 *bed profile* (3.45)

Figure 2 — Geometric definitions

5 Terms related to flow measurement structures

5.1
flow measurement structure
hydraulic structure [e.g. *weir* (5.2), *flume* (5.49), gate] installed in an *open channel* (3.19) where in most cases the *discharge* (3.5) can be derived from the measured upstream *water level* (3.64)

© ISO 2022 – All rights reserved

Documents
Document Sharing Hub
Full document details: BS EN ISO 772:2022

5.2
weir
overflow structure that may be used for controlling the upstream *water level* (3.64) or for measuring *discharge* (3.5) or both

Note 1 to entry: See Figure 3.

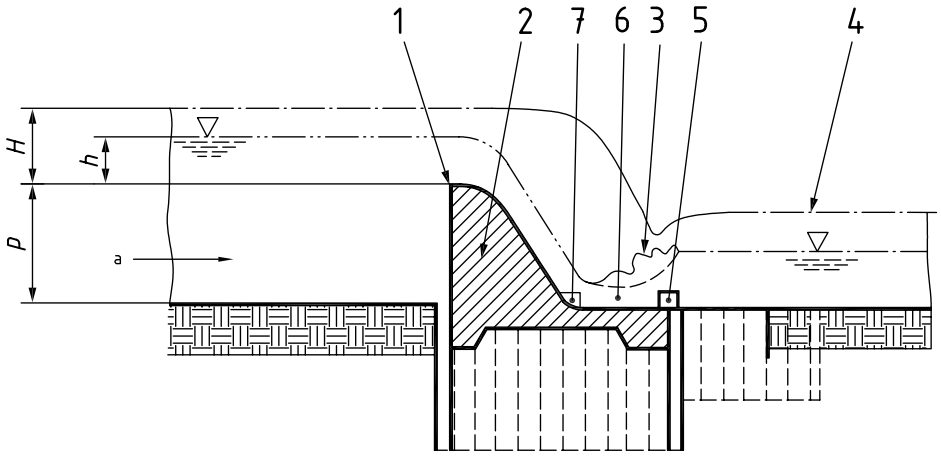

Key

1 weir crest
2 *weir block* (5.8)
3 *hydraulic jump* (3.82)
4 *total head line* (3.61)
5 *control block* (5.19)
6 *stilling basin* (5.20)
7 *baffle* (5.18)
H total head over crest
h head over crest
p *height of weir* (5.3)
a Direction of flow.

Figure 3 — Weir

5.3
height of weir
apex height
height from the upstream bed to the lowest point of the crest

5.4
head over the weir
elevation of the water surface above the lowest point of the crest, measured at a point sufficiently upstream to be unaffected by the *drawdown curve* (3.77) of the *weir* (5.2)

Note 1 to entry: The distance upstream of the point of measurement depends on the type of weir used.

5.5
upstream total head
elevation of the *total head* (3.60) relative to the flume invert level or the level of lowest point of the crest, measured upstream of the structure

5.6
downstream total head
elevation of the *total head* (3.60) relative to the flume invert level or the level of lowest point of the crest, measured downstream of the structure

© ISO 2022 – All rights reserved
Documents
Document Sharing Hub
Full document details: BS EN ISO 772:2022

5.7
weir abutment
abutment
wing wall
wall at the side of a *channel* (3.18), generally parallel to the longitudinal axis of the *weir* (5.2), against which the weir terminates

5.8
weir block
weir body
part of a *weir* (5.2) lying between the *weir abutments* (5.7) and over which the water flows

5.9
full-width weir
suppressed weir
weir (5.2) whose crest fills the width of the *channel* (3.18) in which it is placed, thus eliminating the side contraction of the *stream* (3.26)

5.10
divide wall
wall running in the direction of *flow* (3.3) and separating the individual sections of a *compound structure* (5.47)

5.11
glacis
sloping downstream face of a *weir block* (5.8) and continuation of the crest

5.12
weir slope
ratio of the horizontal to the vertical components of the upstream face, the downstream face or the *cross-slope* (5.15) of a *weir* (5.2)

5.13
upstream face weir slope
ratio of the horizontal to the vertical components of the upstream face of a *weir* (5.2)

5.14
downstream face weir slope
ratio of the horizontal to the vertical components of the downstream face of a *weir* (5.2)

5.15
cross-slope
ratio of the horizontal to the vertical components of the slope of a *weir* (5.2)

5.16
approach channel
reach (3.34) of the *channel* (3.18) upstream of the gauging structure in which suitable flow conditions have to be established to ensure correct gauging

5.17
straightening vane
guide vane
device placed in the approach to improve flow conditions

Note 1 to entry: A similar purpose is served by the use of *baffles* (5.18).

5.18
baffle
wall or block placed downstream of a structure to dissipate energy or to cause improved velocity distribution

© ISO 2022 – All rights reserved

Documents
Document Sharing Hub
Full document details: BS EN ISO 772:2022

5.19
control block
baffle pier
energy-breaking block
block constructed in a *channel* (3.18) or *stilling basin* (5.20) to increase turbulence and thereby dissipate the energy of water flowing at high *velocity* (3.113)

Note 1 to entry: See Figure 3 for the application of a control block to a weir construction.

5.20
stilling basin
basin constructed downstream of a structure to dissipate the energy of fast-flowing water and to protect the bed and banks from erosion

Note 1 to entry: See Figure 3.

5.21
separation pocket
<at a corner or at a point of large curvature> region of recirculating *flow* (3.3) in a structure caused by separation of the main flow from the structure

Note 1 to entry: This phenomenon can occur at *broad-crested weirs* (5.31) which do not have rounded upstream or downstream corners or which do not have a crest of sufficient length in the direction of flow.

5.22
separation pocket
<triangular-profile weir> near-cylindrical volume of slowly moving water immediately downstream of the crest of the structure

5.23
throat
part of a *flume* (5.49) at which *critical flow* (5.29) occurs, usually where the wetted cross-sectional area is at a minimum

Note 1 to entry: The throat can be rectangular, trapezoidal, U-shaped or another specially designed shape.

5.24
modular flow
free flow
flow (3.3) over or through a structure when the upstream *water level* (3.64) is independent of the downstream water level for a given *discharge* (3.5)

5.25
discharge coefficient
coefficient in the discharge equation depending on the type and shape of the measuring structure and the *head over the weir* (5.4)

5.26
modular limit
submergence ratio (5.28) for *flow* (3.3) over a *weir* (5.2) at which the upstream *water level* (3.64) just begins to be affected by the downstream water level for a given *discharge* (3.5)

5.27
drowned flow
non-modular flow
submerged flow
flow (3.3), over or through a structure, when it is affected by changes in the *water level* (3.64) downstream

© ISO 2022 – All rights reserved
Documents
Document Sharing Hub
Full document details: BS EN ISO 772:2022

5.28
submergence ratio
ratio of the *downstream total head* (5.6) to the *upstream total head* (5.5) in a structure

5.29
critical flow
<flow measurement structures> flow conditions for which the *total head* (3.60) above the *channel bed* (3.43) reaches a minimum at a given *discharge* (3.5) and for given channel dimensions

Note 1 to entry: The water *depth* (3.78) for these flow conditions is called *critical depth* (3.16) and occurs during the *transition* (3.112) from *subcritical flow* (3.12) to *supercritical flow* (3.13).

Note 2 to entry: Critical flow in overflow structures and undershot gates occurs at the critical section, also called the "control section". Critical flow in a measuring structure is a condition for *modular flow* (5.24).

5.30
double gauging
measurement of two simultaneous but independent heads to facilitate measurement in the *drowned flow* (5.27) range

Note 1 to entry: The usual head measurement locations lie between 3 H_{max} upstream of the *weir* (5.2) and 3 H_{max} downstream of the weir, where H_{max} is the maximum total head over the weir crest.

5.31
broad-crested weir
weir (5.2) with a horizontal longitudinal crest which has a length equal to or greater than the maximum operating head

Note 1 to entry: The streamlines above the crest are approximately straight and parallel, at least over a short distance.

Note 2 to entry: The maximum operating head is the maximum head up to which the weir can be used for *discharge* (3.5) measurement as per the limits of design.

Note 3 to entry: See Figure 4.

© ISO 2022 – All rights reserved

Documents
Document Sharing Hub
Full document details: BS EN ISO 772:2022