BS EN ISO 9300:2022

BSI Standards Publication

Measurement of gas flow by means of critical flow nozzles

Documents
Document Sharing Hub

Full document details: BS EN ISO 9300:2022

National foreword

This British Standard is the UK implementation of EN ISO 9300:2022. It is identical to ISO 9300:2022. It supersedes BS EN ISO 9300:2005, which is withdrawn.

The UK participation in its preparation was entrusted to Technical Committee CPI/30/2, Differential pressure methods.

A list of organizations represented on this committee can be obtained on request to its committee manager.

Contractual and legal considerations

This publication has been prepared in good faith, however no representation, warranty, assurance or undertaking (express or implied) is or will be made, and no responsibility or liability is or will be accepted by BSI in relation to the adequacy, accuracy, completeness or reasonableness of this publication. All and any such responsibility and liability is expressly disclaimed to the full extent permitted by the law.

This publication is provided as is, and is to be used at the recipient's own risk.

The recipient is advised to consider seeking professional guidance with respect to its use of this publication.

This publication is not intended to constitute a contract. Users are responsible for its correct application.

© The British Standards Institution 2022
Published by BSI Standards Limited 2022

ISBN 978 0 539 13213 7

ICS 17.120.10

Compliance with a British Standard cannot confer immunity from legal obligations.

This British Standard was published under the authority of the Standards Policy and Strategy Committee on 31 August 2022.

Amendments/corrigenda issued since publication

Date	Text affected

Documents
Document Sharing Hub

Full document details: BS EN ISO 9300:2022

EUROPEAN STANDARD

NORME EUROPÉENNE

EUROPÄISCHE NORM

EN ISO 9300

June 2022

ICS 17.120.10

Supersedes EN ISO 9300:2005

English Version

Measurement of gas flow by means of critical flow nozzles (ISO 9300:2022)

Mesurage de débit de gaz au moyen de tuyères en régime critique (ISO 9300:2022)

Durchflussmessung von Gasen mit Venturidüsen bei kritischer Strömung (ISO 9300:2022)

This European Standard was approved by CEN on 17 June 2022.

CEN members are bound to comply with the CEN/CENELEC Internal Regulations which stipulate the conditions for giving this European Standard the status of a national standard without any alteration. Up-to-date lists and bibliographical references concerning such national standards may be obtained on application to the CEN-CENELEC Management Centre or to any CEN member.

This European Standard exists in three official versions (English, French, German). A version in any other language made by translation under the responsibility of a CEN member into its own language and notified to the CEN-CENELEC Management Centre has the same status as the official versions.

CEN members are the national standards bodies of Austria, Belgium, Bulgaria, Croatia, Cyprus, Czech Republic, Denmark, Estonia, Finland, France, Germany, Greece, Hungary, Iceland, Ireland, Italy, Latvia, Lithuania, Luxembourg, Malta, Netherlands, Norway, Poland, Portugal, Republic of North Macedonia, Romania, Serbia, Slovakia, Slovenia, Spain, Sweden, Switzerland, Turkey and United Kingdom.

EUROPEAN COMMITTEE FOR STANDARDIZATION
COMITÉ EUROPÉEN DE NORMALISATION
EUROPÄISCHES KOMITEE FÜR NORMUNG

CEN-CENELEC Management Centre: Rue de la Science 23, B-1040 Brussels

© 2022 CEN All rights of exploitation in any form and by any means reserved worldwide for CEN national Members.

Ref. No. EN ISO 9300:2022 E

Documents
Document Sharing Hub

Full document details: BS EN ISO 9300:2022

European foreword

This document (EN ISO 9300:2022) has been prepared by Technical Committee ISO/TC 30 "Measurement of fluid flow in closed conduits" in collaboration with CCMC.

This European Standard shall be given the status of a national standard, either by publication of an identical text or by endorsement, at the latest by December 2022, and conflicting national standards shall be withdrawn at the latest by December 2022.

Attention is drawn to the possibility that some of the elements of this document may be the subject of patent rights. CEN shall not be held responsible for identifying any or all such patent rights.

This document supersedes EN ISO 9300:2005.

Any feedback and questions on this document should be directed to the users' national standards body/national committee. A complete listing of these bodies can be found on the CEN website.

According to the CEN-CENELEC Internal Regulations, the national standards organizations of the following countries are bound to implement this European Standard: Austria, Belgium, Bulgaria, Croatia, Cyprus, Czech Republic, Denmark, Estonia, Finland, France, Germany, Greece, Hungary, Iceland, Ireland, Italy, Latvia, Lithuania, Luxembourg, Malta, Netherlands, Norway, Poland, Portugal, Republic of North Macedonia, Romania, Serbia, Slovakia, Slovenia, Spain, Sweden, Switzerland, Turkey and the United Kingdom.

Endorsement notice

The text of ISO 9300:2022 has been approved by CEN as EN ISO 9300:2022 without any modification.

Documents
Document Sharing Hub

Full document details: BS EN ISO 9300:2022

Contents

Page

Foreword v

1 Scope 1

2 Normative references 1

3 Terms and definitions 1
3.1 Pressure 1
3.2 Temperature 2
3.3 Nozzle 2
3.4 Flow 3
3.5 Flow rate 4
3.6 Gas 5

4 Symbols and abbreviations 6

5 Basic equations 9
5.1 Gas behaviour 9
5.1.1 Isentropic process 9
5.1.2 State equation 9
5.2 Isentropic flow of a perfect gas 9
5.2.1 Flowing area 9
5.2.2 Static pressure 9
5.2.3 Static temperature 10
5.3 Theoretical variables at the critical point 10
5.3.1 General 10
5.3.2 Critical pressure 10
5.3.3 Critical temperature 10
5.3.4 Critical density 10
5.3.5 Critical velocity 10
5.4 Theoretical mass flow rates 10
5.4.1 General 10
5.4.2 Theoretical mass flow rate of a perfect gas 10
5.4.3 Theoretical mass flow rate of real gas 11
5.5 Mass flow rate 11

6 General requirements 11

7 Applications for which the method is suitable 12

8 CFN 12
8.1 General requirements for both the standard CFN types 12
8.1.1 General 12
8.1.2 Materials 12
8.1.3 Contraction and throat 13
8.1.4 Diffuser 13
8.2 Requirements for each standard types of CFN 14
8.2.1 Standard CFNs ..... Error! Bookmark not defined.
8.2.2 Toroidal-throat CFN 15
8.2.3 Cylindrical-throat CFN 16

9 Installation requirements 18
9.1 General requirements for both the standard configurations 18
9.1.1 Standard configurations 18
9.1.2 Upstream pressure tapping 18
9.1.3 Downstream pressure tapping 19

AVA Documents
Document Sharing Hub

© ISO 2022 – All rights reserved

Full document details: BS EN ISO 9300:2022

9.1.4 Temperature measurement ... 19
9.1.5 Density measurement ... 20
9.1.6 Drain hole ... 20
9.1.7 Downstream condition ... 20
9.2 Pipe configuration ... 21
9.2.1 General ... 21
9.2.2 Upstream pipe ... 21
9.2.3 Pressure measurement ... 22
9.2.4 Temperature measurement ... 22
9.3 Chamber configuration ... 23
9.3.1 General ... 23
9.3.2 Upstream chamber ... 23
9.3.3 Pressure measurement ... 23
9.3.4 Temperature measurement ... 23
9.3.5 Back-pressure ratio ... 23

10 Calculations ... 23
10.1 General ... 23
10.2 Calculation of mass flow rate, q_m ... 23
10.3 Calculation of discharge coefficient, C_d ... 24
10.4 Calculation of critical flow function, C^* or C^*_D ... 25
10.5 Conversion of measured pressure into stagnation pressure ... 25
10.6 Conversion of measured temperature into stagnation temperature ... 25
10.7 Calculation of viscosity ... 25

11 Estimation of critical back-pressure ratio ... 26
11.1 For a traditional diffuser at Reynolds numbers higher than 2×10^5 ... 26
11.2 For any diffuser at low Reynolds numbers ... 27
11.3 For CFNs without diffuser or with very short diffuser ... 28

12 Uncertainties in the measurement of flow rate ... 28
12.1 General ... 28
12.2 Practical computation of uncertainty ... 29
12.3 Correlated uncertainty components ... 30

Annex A (informative) Discharge coefficient values ... 32

Annex B (informative) Critical flow function ... 34

Annex C (informative) Critical flow function values — Pure gases and air ... 37

Annex D (informative) Computation of critical mass flux for critical flow nozzles with high nozzle throat to upstream pipe diameter ratio, $\beta > 0{,}25$ ... 62

Annex E (informative) Diameter correction method ... 66

Annex F (informative) Adjustment of discharge coefficient curve on a data set ... 71

Annex G (informative) Discharge coefficient ... 79

Annex H (informative) Critical back pressure ratio ... 84

Annex I (informative) Viscosity values – Pure gases and air ... 92

Annex J (informative) Supplement ... 108

Bibliography ... 116

© ISO 2022 – All rights reserved

Documents
Document Sharing Hub
Full document details: BS EN ISO 9300:2022

Foreword

ISO (the International Organization for Standardization) is a worldwide federation of national standards bodies (ISO member bodies). The work of preparing International Standards is normally carried out through ISO technical committees. Each member body interested in a subject for which a technical committee has been established has the right to be represented on that committee. International organizations, governmental and non-governmental, in liaison with ISO, also take part in the work. ISO collaborates closely with the International Electrotechnical Commission (IEC) on all matters of electrotechnical standardization.

The procedures used to develop this document and those intended for its further maintenance are described in the ISO/IEC Directives, Part 1. In particular, the different approval criteria needed for the different types of ISO documents should be noted. This document was drafted in accordance with the editorial rules of the ISO/IEC Directives, Part 2 (see www.iso.org/directives).

Attention is drawn to the possibility that some of the elements of this document may be the subject of patent rights. ISO shall not be held responsible for identifying any or all such patent rights. Details of any patent rights identified during the development of the document will be in the Introduction and/or on the ISO list of patent declarations received (see www.iso.org/patents).

Any trade name used in this document is information given for the convenience of users and does not constitute an endorsement.

For an explanation of the voluntary nature of standards, the meaning of ISO specific terms and expressions related to conformity assessment, as well as information about ISO's adherence to the World Trade Organization (WTO) principles in the Technical Barriers to Trade (TBT), see www.iso.org/iso/foreword.html.

ISO 9300 was prepared by Technical Committee ISO/TC 30, *Measurement of fluid flow in closed conduits*, Subcommittee SC 2, *Pressure differential devices*, in collaboration with the European Committee for Standardization (CEN) Technical Committee CEN/SS F05, *Measuring instruments*, in accordance with the Agreement on technical cooperation between ISO and CEN (Vienna Agreement).

This third edition cancels and replaces the second edition (ISO 9300:2005), which has been technically revised.

The main changes are as follows:

— the discharge coefficient curve is given by a single equation each for the toroidal- and cylindrical-throat critical flow nozzles (CFNs) that covers both the laminar and turbulent boundary layer regimes;

— the discharge coefficient curve of the cylindrical-throat CFN is updated based on the recent experimental and theoretical data;

— the quadrant CFN and detachable diffuser are introduced;

— the basic equations used to measure the discharge coefficient are listed;

— the premature unchoking phenomenon is explained to give attention to the unpredictable unchoking at low Reynolds numbers;

— REFPROP is introduced for the calculations of critical flow function and viscosity as well as their fitted curves are given for some pure gases and air;

Documents
Document Sharing Hub

© ISO 2022 – All rights reserved

Full document details: BS EN ISO 9300:2022

— the diameter correction method is introduced to fit the experimental discharge coefficient data to a reference curve;

— the detailed method to match the discharge coefficient curve on an experimental data set is described;

— the background of the specifications is given.

Any feedback or questions on this document should be directed to the user's national standards body. A complete listing of these bodies can be found at www.iso.org/members.html.

© ISO 2022 – All rights reserved
Documents
Document Sharing Hub
Full document details: BS EN ISO 9300:2022

Measurement of gas flow by means of critical flow nozzles

1 Scope

This document specifies the geometry and method of use (installation in a system and operating conditions) of critical flow nozzles (CFNs) used to determine the mass flow rate of a gas flowing through a system basically without the need to calibrate the CFN. It also gives the information necessary for calculating the flow rate and its associated uncertainty.

This document is applicable to nozzles in which the gas flow accelerates to the critical velocity at the minimum flowing section, and only where there is steady flow of single-phase gas. When the critical velocity is attained in the nozzle, the mass flow rate of the gas flowing through the nozzle is the maximum possible for the existing inlet condition, while the CFN can only be used within specified limits, e.g. the CFN throat to inlet diameter ratio and Reynolds number. This document deals with the toroidal- and cylindrical-throat CFNs for which direct calibration experiments have been made in sufficient number to enable the resulting coefficients to be used with certain predictable limits of uncertainty.

2 Normative references

There are no normative references in this document.

3 Terms and definitions

For the purposes of this document, the following terms and definitions apply.

ISO and IEC maintain terminology databases for use in standardization at the following addresses:

— ISO Online browsing platform: available at https://www.iso.org/obp

— IEC Electropedia: available at https://www.electropedia.org/

3.1 Pressure

3.1.1
static pressure
pressure of the flowing gas (see Annex J)

Note 1 to entry: The static pressure is measured through a *wall pressure tapping* (3.1.3).

3.1.2
stagnation pressure
pressure which would exist in a flowing gas stream if the stream were brought to rest by an isentropic process

© ISO 2022 – All rights reserved

Documents
Document Sharing Hub
Full document details: BS EN ISO 9300:2022

3.1.3
wall pressure tapping
hole drilled in the wall of a conduit to measure the *static pressure* (3.1.1) of the flowing gas in the conduit

3.2 Temperature

3.2.1
static temperature
temperature of the flowing gas (see Annex J)

Note 1 to entry: The static temperature cannot be measured exactly by a temperature sensor fixed in the conduit .

3.2.2
stagnation temperature
temperature which would exist in a flowing gas stream if the stream were brought to rest by an isentropic process (see Annex J).

3.2.3
recovery temperature (wall temperature, measured temperature)
temperature of the gas touching the wall (see Annex J)

Note 1 to entry: The temperature sensor fixed on a conduit measures the recovery temperature.

3.3 Nozzle

3.3.1
contraction
portion of the *nozzle* (3.3.5) upstream of the *throat* (3.3.2) intended to accelerate the flow and attain the supposed flow field at the *critical point* (3.4.4)

3.3.2
throat
portion of the *nozzle* (3.3.5) where the cross section is minimum

Note 1 to entry: This document deals with nozzles with toroidal- and cylindrical-throats.

3.3.3
diffuser
divergent portion of the *nozzle* (3.3.5) behind the *throat* (3.3.2) intended to recover the pressure

3.3.4
traditional diffuser
frustum *diffuser* (3.3.3) machined as one piece

3.3.5
nozzle
device inserted in a system intended to use for measurement of the flow rate through system, which consists of *contraction* (3.3.1) and *throat* (3.3.2), or *contraction* (3.3.1), *throat* (3.3.2), and *diffuser* (3.3.3)

3.3.6
critical flow nozzle
CFN
nozzle (3.3.5) that attains the *critical flow* (3.4.2)

© ISO 2022 – All rights reserved
Documents
Document Sharing Hub
Full document details: BS EN ISO 9300:2022

3.3.7
normal precision nozzle
NPN
nozzle (3.3.5) machined by a lathe, with the surface polished to achieve the desired roughness

3.3.8
high precision nozzle
HPN
nozzle (3.3.5) machined by a lathe that can achieve mirror finish without polishing the surface, thus it has the form exactly as designed

3.4 Flow

3.4.1
isentropic flow
theoretical flow along which the thermodynamic process is adiabatic and reversible (see Annex J)

3.4.2
critical flow
flow in a *nozzle* (3.3.5) that has attained the maximum flow rate of the *nozzle* (3.3.5) for a given set of inlet conditions (see Annex J)

3.4.3
choke
attaining the *critical flow* (3.4.2) in a *nozzle* (3.3.5) (see Annex J)

3.4.4
critical point
location in the *CFN* (3.3.6) where the flow attains the *critical velocity* (3.4.11)

3.4.5
critical pressure
p^*
static pressure (3.1.1) at the *critical point* (3.4.4) (see Annex J)

3.4.6
critical pressure of perfect gas
p^*_{P}
theoretical *static pressure* (3.1.1) at the *critical point* (3.4.4) assuming the *isentropic flow* (3.4.1) of *perfect gas* (3.6.1)

3.4.7
critical temperature
T^*
static temperature (3.2.1) at the *critical point* (3.4.4)

3.4.8
critical temperature of perfect gas
T^*_{P}
theoretical *static temperature* (3.2.1) at the *critical point* (3.4.4) assuming the *isentropic flow* (3.4.1) of *perfect gas* (3.6.1)

© ISO 2022 – All rights reserved

Documents
Document Sharing Hub
Full document details: BS EN ISO 9300:2022

3.4.9
critical density
ρ^*
density at the *critical point* (3.4.4)

3.4.10
critical density of perfect gas
ρ^*_P
theoretical density at the *critical point* (3.4.4) assuming the *isentropic flow* (3.4.1) of *perfect gas* (3.6.1)

3.4.11
critical velocity
c^*
flow velocity at the *critical point* (3.4.4) (see Annex J)

3.4.12
critical velocity of perfect gas
c^*_P
theoretical flow velocity at the *critical point* (3.4.4) assuming the *isentropic flow* (3.4.1) of *perfect gas* (3.6.1)

3.5 Flow rate

3.5.1
mass flow rate
q_m
mass of the gas passing through the *CFN* (3.3.6) per unit time

Note 1 to entry: In this document, the term "mass flow rate" without any adjective always refers to the true mass flow rate through the CFN.

3.5.2
theoretical mass flow rate of perfect gas
$q_{\mathrm{th,P}}$
theoretical mass flow rate through the *CFN* (3.3.6) assuming one-dimensional *isentropic flow* (3.4.1) of *perfect gas* (3.6.1)

3.5.3
theoretical mass flow rate of real gas
$q_{\mathrm{th,R}}$
theoretical mass flow rate through the *CFN* (3.3.6) assuming one-dimensional *isentropic flow* (3.4.1) of *real gas* (3.6.1)

3.5.4
volume flow rate
q_V
volume of the gas passing through the conduit, in which the *CFN* (3.3.6) is installed, per unit time at a designated location (see Annex J)

Note 1 to entry: The volume flow rate at the designated location, where the density is ρ, is given by:

$$q_V = \frac{q_m}{\rho}$$

© ISO 2022 – All rights reserved
Documents
Document Sharing Hub
Full document details: BS EN ISO 9300:2022

3.5.5
Reynolds number

$$R_e = \frac{4q_m}{\pi d \mu_0}$$

dimensionless parameter calculated from the throat diameter, *mass flow rate* (3.5.1), and gas dynamic viscosity at *CFN* (3.3.6) inlet stagnation condition (see Annex J)

3.5.6
discharge coefficient

$$C_d = \frac{q_m}{q_{th,R}}$$

ratio of the *mass flow rate* (3.5.1) to theoretical one of *real gas* (3.6.1) at the same inlet stagnation condition

3.5.7
critical pressure ratio
ratio of the *critical pressure* (3.4.5) of *perfect gas* (3.6.1) to the inlet *stagnation pressure* (3.1.2)

3.5.8
back-pressure ratio
ratio of the *static pressure* (3.1.1) at the diffuser exit to the inlet *stagnation pressure* (3.1.2)

3.5.9
local Mach number
M_a
ratio of the flow velocity to local acoustic one

3.5.10
Mach number in the upstream conduit
M_{aC}
ratio of the mean axial flow velocity over the cross-section of upstream conduit to the acoustic velocity at the same location

Note to entry: It is not necessary for M_{aC} to be accurate and it may be approximated by:

$$M_{aC} = \frac{q_m}{\frac{\pi D^2}{4}\rho_0} \frac{1}{\sqrt{\gamma \frac{R}{M} T_0}}$$

3.5.11
uncertainty
parameter, associated with the results of a measurement, that characterizes the dispersion of the values that could reasonably be attributed to the measurand

3.6 Gas

3.6.1
perfect gas
theoretical gas whose *isentropic exponent* (3.6.6) equals to the specific heat that is constant at any gas condition and also *compressibility factor* (3.6.3) is always unity

© ISO 2022 – All rights reserved

Documents
Document Sharing Hub
Full document details: BS EN ISO 9300:2022

3.6.2
real gas
actual gas whose *isentropic exponent* (3.6.6) and *compressibility factor* (3.6.3) depend on its pressure and temperature

3.6.3
compressibility factor
Z
correction factor for the deviation of the real gas constant from the universal one (see Annex J)

3.6.4
critical flow function
C^*
dimensionless function that relates the thermodynamic properties of the gas at the throat of *CFN* (3.3.6) to its inlet stagnation condition assuming one-dimensional *isentropic flow* (3.4.1)

3.6.5
critical flow function for the flow rate equation using density
$C^*_D = C^* \sqrt{Z_0}$
alternative *critical flow function* (3.6.4) to be used in the equation of *mass flow rate* (3.5.1) that uses density

3.6.6
isentropic exponent
κ
ratio of the relative variation in pressure to the corresponding relative variation in density under isentropic process

4 Symbols and abbreviations

Symbol	Description	Dimension	SI unit
a, b, c, d, e, f, n	Coefficients for Formula (17)	Dimensionless	—
A	Flowing area	L^2	m^2
A^*	Flowing area at the critical point	L^2	m^2
A_2	Cross-sectional area of nozzle exit	L^2	m^2
A_{nt}	Cross-sectional area at the critical point at the operating CFN temperature	L^2	m^2
c	Local acoustic velocity	LT^{-1}	$m \cdot s^{-1}$
c^*	Local acoustic velocity at the critical point	LT^{-1}	$m \cdot s^{-1}$
c^*_P	Local acoustic velocity at the critical point of perfect gas	LT^{-1}	$m \cdot s^{-1}$
C_{c^*}	Parameter for the equation of C^*	Dimensionless	—
C_μ	Parameter for the equation of μ	Dimensionless	—
C_d	Discharge coefficient	Dimensionless	—
C_d^{target}	Target discharge coefficient obtained when applying the DCM	Dimensionless	—
C_d^{ISO}	Discharge coefficient calculated by using Formula (17)	Dimensionless	—
C^*	Critical flow function	Dimensionless	—
C^*_D	Critical flow function for the flow rate equation using density	Dimensionless	—
C^*_P	Critical flow function of perfect gas	Dimensionless	—
C^*_{DA}	Critical flow function of dry air	Dimensionless	—
C^*_{HA}	Critical flow function of humid air	Dimensionless	—

© ISO 2022 – All rights reserved
AVA Documents Document Sharing Hub
Full document details: BS EN ISO 9300:2022

Symbol	Description	Dimension	SI unit
$C_{i,j}$	Coefficient to calculate C^*	b	b
c_v	Covariance	Dimensionless	—
D	Diameter of the inlet conduit	L	m
d_{DCM}	Throat diameter corrected by the DCM	L	m
d_{nt}	Throat diameter at the operating CFN temperature	L	m
d_{nt0}	Measured throat diameter (at temperature T_{nt0})	L	m
d_{ORI}	Throat diameter used at the calibration for the DCM	L	m
d_p	Diameter of the wall pressure tapping breakthrough into the conduit	L	m
H_R	Relative humidity	%	—
k	Coverage factor	Dimensionless	—
l	Diffuser length	L	m
l_1	Distance between Etoile straightener outlet and nozzle inlet plane	L	m
l_2	Length of Etoile straightener	L	m
M	Molar mass	M	$kg\ mol^{-1}$
M_a	Local Mach number	Dimensionless	—
M_{a2}	Local Mach number at the CFN exit assuming the fully subsonic flow in the diffuser	Dimensionless	—
M_{aC}	Local Mach number at the location of the inlet pressure tapping	Dimensionless	—
p	Static pressure of the gas	$ML^{-1}T^{-2}$	Pa
p_0	Stagnation pressure of the gas at the CFN inlet	$ML^{-1}T^{-2}$	Pa
p_1	Static pressure of the gas measured through the upstream wall pressure tapping	$ML^{-1}T^{-2}$	Pa
p_2	Static pressure of the gas at the diffuser exit	$ML^{-1}T^{-2}$	Pa
p_{2i}	Theoretical static pressure of the gas at the diffuser exit when the nozzle is choked but the flow in the diffuser is fully subsonic	$ML^{-1}T^{-2}$	Pa
p_{den}	Static pressure in the gas at densitometer	$ML^{-1}T^{-2}$	Pa
P_r	The Prandtl number	Dimensionless	—
p^*	Static pressure at the critical point	$ML^{-1}T^{-2}$	Pa
p^*_P	Theoretical static pressure at the critical point of perfect gas	$ML^{-1}T^{-2}$	Pa
q_m	Mass flow rate (True mass flow rate)	MT^{-1}	$kg{\cdot}s^{-1}$
$q_{th,P}$	Theoretical mass flow rate of perfect gas	MT^{-1}	$kg{\cdot}s^{-1}$
$q_{th,R}$	Theoretical mass flow rate of real gas	MT^{-1}	$kg{\cdot}s^{-1}$
q_V	Volume flow rate	MT^{-1}	$kg{\cdot}s^{-1}$
R	Universal gas constant (8,314 5 J/(mol·K))	$M\ L^2T^{-2}\Theta^{-1}$	$J{\cdot}mol^{-1}K^{-1}$
R_a	Arithmetic average roughness	L	m
Re	Reynolds number	Dimensionless	—
Re^{ORI}	The Reynolds number at the calibration for the DCM	Dimensionless	—
R_f	Recovery factor	Dimensionless	—
r_c	Radius of inlet contraction	L	m
r_{CBP}	Critical back-pressure ratio	Dimensionless	—
r_{nt}	Radius in the vicinity of throat inlet in cylindrical-throat CFN	L	m
T	Static temperature of the gas	Θ	K
T_0	Stagnation temperature of the gas at the CFN inlet	Θ	K
T_1	Measured temperature of the gas at the CFN inlet	Θ	K
T_{den}	Static temperature at densitometer	Θ	K
T_m	Measured temperature	Θ	K

AVA Documents
Document Sharing Hub

© ISO 2022 – All rights reserved

Full document details: BS EN ISO 9300:2022

Symbol	Description	Dimension	SI unit
T_{nt0}	Temperature when throat diameter was measured	Θ	K
T^*	Static temperature at the critical point	Θ	K
T^*_p	Theoretical static temperature at the critical point of perfect gas	Θ	K
T_{c*}	Parameter for the equation of C^*	Θ	K
T_μ	Parameter for the equation of μ	Θ	K
u	Standard uncertainty (k = 1)	[b]	—
u_c	Combined standard uncertainty (k = 1)	[b]	—
U	Expanded uncertainty (with specified coverage factor, k)	[b]	U
$V_{i,j}$	Coefficient to calculate viscosity	[b]	U
U	Expanded uncertainty (with specified coverage factor, k)	[b]	U
x_i	Mole fraction of the i-th component	Dimensionless	—
Z	Compressibility factor	Dimensionless	—
Z_0	Compressibility factor at upstream stagnation condition	Dimensionless	—
Z_{den}	Compressibility factor at densitometer	Dimensionless	—
α	Linear expansion coefficient of the nozzle material	Θ^{-1}	K^{-1}
β	Diameter ratio of the throat and conduit (d_{nt}/D)	Dimensionless	—
δ	Absolute uncertainty	[a]	[a]
γ	Heat capacity ratio	Dimensionless	—
κ	Isentropic exponent	Dimensionless	—
μ_0	Dynamic viscosity of the gas at the inlet stagnation conditions	$ML^{-1}T^{-1}$	Pa·s
μ	Dynamic viscosity of the gas	$ML^{-1}T^{-1}$	Pa·s
θ	Angle of the frustum diffuser wall against the nozzle AOS	Dimensionless	rad
ρ	Density of the gas	ML^{-3}	kg
ρ_0	Gas density at the inlet stagnation conditions at nozzle inlet	ML^{-3}	$kg{\cdot}m^{-3}$
ρ_{den}	Gas density measured by a densitometer	ML^{-3}	$kg{\cdot}m^{-3}$
ρ^*	Theoretical density of the gas at the critical point	ML^{-3}	$kg{\cdot}m^{-3}$
ρ^*_p	Theoretical density of the gas at the critical point of perfect gas	ML^{-3}	$kg{\cdot}m^{-3}$

M = mass

L = length

T = time

Θ = temperature

[a] Same as the corresponding quantity.

[b] Depending on each terms of the equation.

© ISO 2022 – All rights reserved

Documents
Document Sharing Hub
Full document details: BS EN ISO 9300:2022

Abbreviation	Description
AOS	axis of symmetry
CFN	critical flow nozzle
CL	center line
DCM	diameter correction method
HPN	high precision nozzle
NPN	normal precision nozzle
IP	inlet plane
PUP	premature unchoking phenomenon
TLS	tangential line of surface

5 Basic equations

5.1 Gas behaviour

5.1.1 Isentropic process

The pressure, temperature, and density of gas in the isentropic process are related by Formulae (1) and (2);

$$\frac{p^{\gamma-1}}{T^{\gamma}} = \text{const.} \tag{1}$$

$$\frac{p}{\rho^{\gamma}} = \text{const.} \tag{2}$$

5.1.2 State equation

The behaviour of real gas is described by Formula (3);

$$\frac{p}{\rho} = \left(\frac{RZ}{M}\right)T \tag{3}$$

5.2 Isentropic flow of a perfect gas

5.2.1 Flowing area

The flowing area is related to the local Mach number by Formula (4);

$$A = \frac{1}{M_{\mathrm{a}}}\left[\frac{(\gamma-1)M_{\mathrm{a}}^{2}+2}{\gamma+1}\right]^{\frac{1}{2}\frac{\gamma+1}{\gamma-1}} A_{\mathrm{nt}} \tag{4}$$

5.2.2 Static pressure

The static pressure is related to the local Mach number by Formula (5);

$$p = \left(1+\frac{\gamma-1}{2}M_{\mathrm{a}}^{2}\right)^{-\frac{\gamma}{\gamma-1}} p_0 \tag{5}$$

© ISO 2022 – All rights reserved

Documents
Document Sharing Hub
Full document details: BS EN ISO 9300:2022

5.2.3 Static temperature

The static temperature is related to the local Mach number by Formula (6);

$$T = \frac{2}{2+(\gamma-1)M_a^{\ 2}} T_0 \tag{6}$$

5.3 Theoretical variables at the critical point

5.3.1 General

The theoretical variables at the critical point are derived assuming the isentropic flow of perfect gas.

5.3.2 Critical pressure

The theoretical static pressure at the critical point is given by Formula (7);

$$p^*_{\mathrm{P}} = \left(\frac{2}{\gamma+1}\right)^{\frac{\gamma}{\gamma-1}} p_0 \tag{7}$$

5.3.3 Critical temperature

The theoretical static temperature at the critical point is given by Formula (8);

$$T^*_{\mathrm{P}} = \frac{2}{\gamma+1} T_0 \tag{8}$$

5.3.4 Critical density

The theoretical density at the critical point is given by Formula (9);

$$\rho^*_{\mathrm{P}} = \left(\frac{2}{\gamma+1}\right)^{\frac{1}{\gamma-1}} \rho_0 \tag{9}$$

5.3.5 Critical velocity

The theoretical flow velocity at the critical point is given by Formula (10);

$$c^*_{\mathrm{P}} = \sqrt{\gamma \frac{R}{M} T^*_{\mathrm{P}}} \tag{10}$$

5.4 Theoretical mass flow rates

5.4.1 General

The theoretical mass flow rates are derived assuming one-dimensional isentropic flow of perfect or real gas.

5.4.2 Theoretical mass flow rate of a perfect gas

The theoretical mass flow rate of a perfect gas is defined by the product of flowing area, local acoustic velocity, and density at the critical point assuming one-dimensional isentropic flow of a perfect gas, i.e. $Z = 1$ and $k = \gamma$, which is given by Formula (11);

© ISO 2022 – All rights reserved
Documents
Document Sharing Hub
Full document details: BS EN ISO 9300:2022

$$q_{\mathrm{th,P}} \equiv A^* c^*_{\mathrm{P}}\, \rho^*_{\mathrm{P}} = A^* C^*_{\mathrm{P}} \frac{p_0}{\sqrt{\left(\frac{R}{M}\right) T_0}} \tag{11}$$

5.4.3 Theoretical mass flow rate of real gas

The theoretical mass flow rate of real gas is defined by the product of flowing area, local acoustic velocity, and density at the critical point assuming one-dimensional isentropic flow of real gas, which is given by Formula (12);

$$q_{\mathrm{th,R}} \equiv A^* c^* \rho^* = A^* C^* \frac{p_0}{\sqrt{\left(\frac{R}{M}\right) T_0}} \tag{12}$$

5.5 Mass flow rate

The mass flow rate of CFN is given by Formulae (13) or (14);

$$q_m = C_{\mathrm{d}}\, q_{\mathrm{th,R}} \tag{13}$$

or

$$q_m = C_{\mathrm{d}} \left(A^* C^*_{\mathrm{D}} \sqrt{p_0 \rho_0} \right) \tag{14}$$

6 General requirements

a) The flow shall be steady-state and single-phase with no condensation to the critical point (throat).

b) A sufficiently low back-pressure ratio shall be applied on the CFN to maintain the critical flow.

NOTE The typical pressure ratio required to operate the CFN with a sufficiently long diffuser can be about 0,8 at high Reynolds numbers, e.g., greater than 2×10^5 (corresponding to ca. 50 m^3/h CFN at the atmospheric pressure); however, it is often necessary to keep the ratio lower than 0,5 at low Reynolds numbers or sometimes 0,25 at very low Reynolds numbers (see Clause 11 and Annex H).

c) The thermodynamic properties of the gas, C^* and M (or C^*_{D} and ρ when a densitometer is used), are required at low uncertainties (see 10.4).

NOTE For a gas mixture, accurate gas composition is required to calculate C^* at sufficiently low uncertainty.

If the following requirements cannot be achieved, the CFN will have to be flow calibrated at the same condition as in its application.

d) The gas should have no significant relaxation effect (see B.5).

e) The temperatures of the gas and CFN should be stable (see Annex J).

f) The form and surface in the contraction and throat should be accurately machined as specified in Clause 8 (see Annex G).

g) The form of the CFN will be verified periodically, especially in the contraction and throat (see Annex G).

NOTE The contraction and throat can be deformed over time by the impact of any solids contained in the gas.

AVA Documents Document Sharing Hub

© ISO 2022 – All rights reserved

Full document details: BS EN ISO 9300:2022

The contraction and throat shall retain their cleanliness and hence surface finish. If this cannot be guaranteed, the measurement shall not be claimed to conform to this document, and flow calibration is recommended.

7 Applications for which the method is suitable

Each application should be evaluated to determine whether a CFN or some other device is the most suitable.

The most common applications for CFNs are to act as working or reference standards to calibrate other flowmeters, as check or transfer standards to verify or compare calibration facilities, as controllers of flow rates, and so on.

Important considerations are:

a) The mass and volume flow rates through the CFN are independent of the downstream condition.

b) The volume flow rate through the conduit where the CFN is installed is almost constant at any upstream pressure if the temperature is stable.

NOTE Multiple CFNs installed in parallel (e.g. the chamber configuration) are required to vary the volume flow rate through the CFN system for a fixed upstream pressure (see 9.3 and Annex J).

Some other considerations are:

c) Accurate measurements of the pressure and temperature (or density when using a densitometer) are required only at the upstream location of the CFN.

d) The downstream pressure should be monitored or estimated to confirm that the CFN is choked.

e) The mass flow rate measured by the CFN is proportional to the inlet stagnation pressure; accordingly, the maximum mass flow rate that can be achieved by the CFN is practically limited by the maximum inlet pressures. (see Annex J)

8 CFN

8.1 General requirements for both the standard CFN types

8.1.1 General

This section specifies the common requirements to the toroidal- and cylindrical-throat CFNs.

To perform the measurement of flow rate at the uncertainty specified in 10.3.2 by using the discharge coefficient specified in 10.3.1, the CFN shall comply with the specifications in 8.1.2 to 8.1.4 and 8.2.

Verification of the form and dimensions by CMM are mandatory, and if the manufacturing tolerances specified in this section including the roughness cannot be achieved or verified by inspections, flow calibration is recommended.

8.1.2 Materials

The CFN shall be made of material suitable for the intended application. Some considerations are that:

Documents
Document Sharing Hub

© ISO 2022 – All rights reserved

Full document details: BS EN ISO 9300:2022

a) it should be possible to finish or machine the surface to the conditions required in 8.1.3 and 8.2,

NOTE Some materials are unsuitable due to pits, voids and lack of homogeneity.

b) the material, together with any surface treatment used, shall not be subject to corrosion in the intended service, and

c) the material should be dimensionally stable and should have known and repeatable thermal expansion characteristics, so that the throat diameter correction in Formula (16) can be made.

8.1.3 Contraction and throat

The contraction and throat of the CFN shall be

a) axisymmetric around the centreline (axis of symmetry, AOS) of the CFN,

b) smoothly finished so that the surface roughness should be

for d_{nt} > 13 mm: $R_a = 15 \times 10^{-6}\ d_{nt}$ as a maximum requirement, and

for $d_{nt} \leq 13$ mm: R_a = 200 nm as a maximum requirement

c) free from dirt or any other contaminants.

It is difficult to machine the contraction and throat as specified, on which the discharge coefficient directly depends, and also to measure the throat diameter accurately, particularly in small nozzles, thus great care should be taken.

Great care is also necessary when polishing the contraction and throat because it may result in significant deformation of the surface.

8.1.4 Diffuser

The only requirement on the diffuser is that it shall not disturb the flow at the throat; therefore, the form of diffuser is not specified.

Besides the traditional diffuser, the requirement allows no diffuser, detachable diffusers[2], and steps exactly at the throat and/or in the diffuser[12] (see Annex J).

The traditional diffuser should be integrated in the nozzle by being machined as one piece. It should be controlled such that any steps, discontinuities, irregularities, and lack of concentricity do not exceed 1% of the local diameter. The length should be not less than d_{nt}. If there is a diameter discontinuity in the diffuser, then the diameter should increase (not decrease) toward the downstream. The arithmetic average roughness of the conical divergent section should not exceed $10^{-4} d_{nt}$. In the specified Reynolds number range, the critical back-pressure ratio of a traditional diffuser may be estimated in accordance with Clause 11.

Some phenomenon (premature unchoking phenomenon, PUP, see Annex H) impacts diffuser performance in an unpredictable manner at low Reynolds numbers[4][12]. If the critical back-pressure ratio is essential for the system operation at low Reynolds numbers, e.g., lower than 2×10^5, the actual critical back-pressure ratio should be measured experimentally using the very CFN with its own conduit for the application because the phenomenon may depend significantly on a slight difference of the CFN form and/or quality as well as its installing condition[9][11].

It is recommended to make the diffuser as long as possible[10], at least $4d_{nt}$, to reduce the risk of the occurrence of PUP. If the diffuser is detachable, it can be exchanged by a longer one if the need arises. Additional detachable diffusers may be attached behind the integrated diffuser without affecting the discharge coefficient (see Figure J.1).

© ISO 2022 – All rights reserved

Documents
Document Sharing Hub
Full document details: BS EN ISO 9300:2022

The inlet of the diffuser, regardless of whether it is integrated or detachable, shall be machined very carefully not to damage or block the throat, so as when attaching the detachable diffuser.

8.2 Requirements for each standard type of CFN

© ISO 2022 – All rights reserved
Documents
Document Sharing Hub
Full document details: BS EN ISO 9300:2022

8.2.1 Toroidal-throat CFN

There are two forms of the standard CFNs:

a) toroidal-throat CFN;

b) cylindrical-throat CFN.

Besides the requirements in 8.1, the toroidal- and cylindrical-throat CFNs shall comply with 8.2.2 and 8.2.3, respectively.

8.2.2 Toroidal-throat CFN

8.2.2.1 Besides the requirements in 8.1, the toroidal-throat CFN shall comply with the specifications in 8.2.2.2 to 8.2.2.7. The requirements are summarized in Figure 1.

8.2.2.2 The inlet plane (IP) is defined as the physical or virtual plane perpendicular to the nozzle AOS intersecting the contraction at a diameter equal to $(2{,}5 \pm 0{,}1)d_{nt}$, regardless of the form upstream of the IP.

8.2.2.3 The contraction downstream of the IP (to the right of IP on Figure 1) shall be a portion of a torus. At the throat, the tangential line of surface (TLS) shall be parallel to the nozzle AOS. A short torus, in which the throat TLS is not parallel to the nozzle AOS, shall be avoided because it may result serious error even if the deficit is very small. To reduce the risk of throat being damaged in the application, the torus preferably extends over the throat into the diffuser portion for some extent, e.g., to ca. $0{,}1d_{nt}$ downstream of the throat, in which the TLS of the torus end is an angle of approximately 3° to the nozzle AOS.

8.2.2.4 If the diffuser is integrated in the nozzle as one piece, great care shall be taken when machining the diffuser beyond throat because even a slight backlash of the lathe may produce unexpected forms exactly at the throat that may effect on the discharge coefficient significantly. Careful inspection of the throat form should be performed after machining, and then if any irregularity is found at the throat, the CFN should be flow calibrated.

8.2.2.5 The form upstream of the IP is not specified provided it does not disturb the flow in contraction; however, it should be axisymmetric and its surface at each axial location should have a diameter greater than or equal to the extension of torus behind the IP.

8.2.2.6 The radius of the torus between the IP and throat may be constant or vary smoothly between $1{,}8d_{nt}$ and $2{,}2d_{nt}$ provided the varying radius does not disturb the flow at the throat. Examples of the torus with constant and variable radii are shown in Figure 1.

8.2.2.7 The half-angle of traditional diffuser should be between 3,0° and 6,0°, which contacts with the torus end smoothly at the same TLS as in Figure 1.

© ISO 2022 – All rights reserved

Documents
Document Sharing Hub
Full document details: BS EN ISO 9300:2022

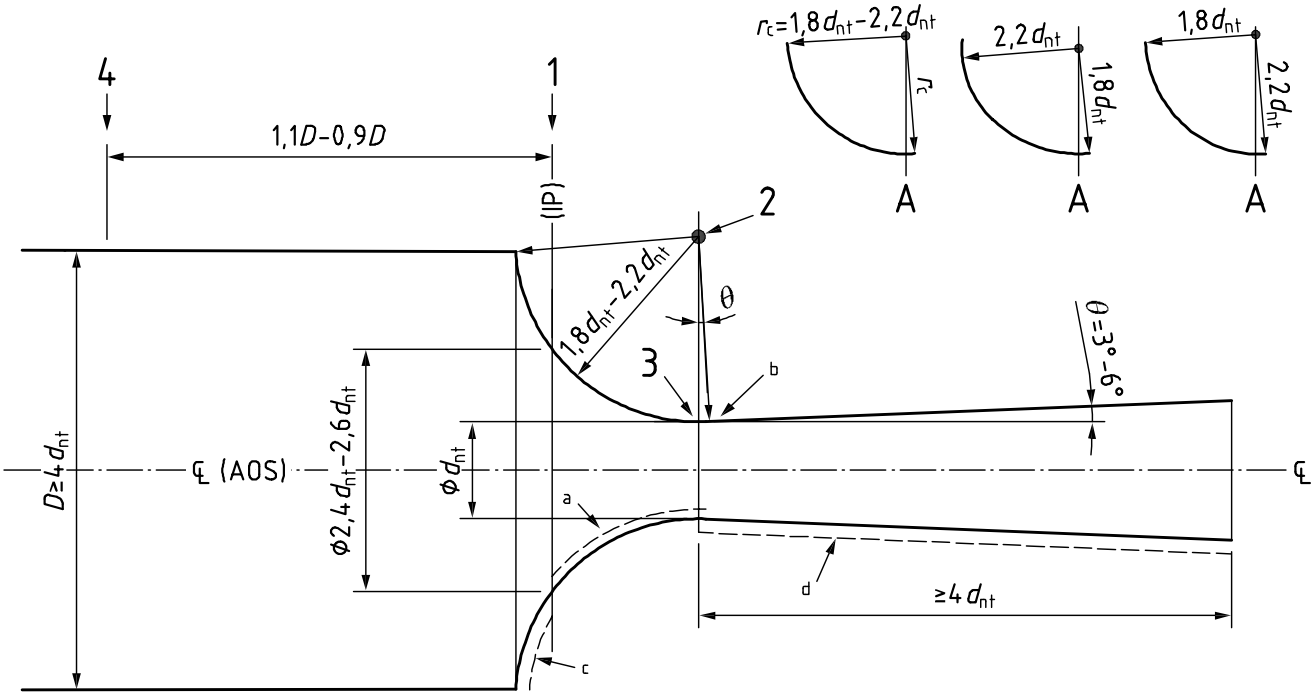

Key

1 inlet plane (IP) (definition, not necessary to be a physical plane, see 8.2.2.2.)
2 centre of the inlet torus
3 throat
4 location of pressure tapping

A examples of the inlet torus (constant and variable radii)

[a] See 8.2.2.3 and 8.2.2.6.
[b] Contact plane of the inlet torus and traditional diffuser (typical form).
[c] See 8.2.2.5 (typical form).
[d] See 8.2.2.7 and 8.1.4 (typical form).

Figure 1 — Toroidal-throat CFN

8.2.3 Cylindrical-throat CFN

8.2.3.1 Besides the requirements in 8.1, the cylindrical-throat CFN shall comply with the specifications in 8.2.3.2 to 8.2.3.10. The requirements are summarized in Figure 2.

8.2.3.2 The inlet plane (IP) is defined at the physical plane of the nozzle front surface.

8.2.3.3 The contraction shall be a quarter of a torus tangential on one hand to the IP and on the other hand to the throat.

8.2.3.4 The contraction shall have the curvature of d_{nt} and shall not deviate from the torus by more than ± 0,001 d_{nt}.

8.2.3.5 The throat shall be a cylinder with the length d_{nt} and diameter d_{nt}.

8.2.3.6 The throat diameter d_{nt} shall be defined by the mean diameter at the throat outlet section. The mean diameter shall be determined by measuring at least four angularly equally distributed

© ISO 2022 – All rights reserved
Documents
Document Sharing Hub
Full document details: BS EN ISO 9300:2022

diameters on the cylindrical throat outlet. No diameter along the throat length shall deviate by more than ± 0,001 d_{nt} from the mean diameter.

8.2.3.7 The transition between contraction and throat should be inspected to verify that the local radius of surface r_c in the plane in which the nozzle AOS lies is never less than 0,5d_{nt} throughout the circumference formed by the contact plane of the contraction and throat. Figure 3 illustrates this requirement.

8.2.3.8 The length of the throat shall not deviate from d_{nt} by more than 0,05d_{nt}. The connection between the throat and diffuser shall also be inspected to have no defect.

8.2.3.9 The surface of contraction and throat shall be properly polished so that the arithmetic average roughness height does not exceed 15 x 10^{-6} d_{nt}, where it can be measured.

8.2.3.10 The half-angle of traditional diffuser should be between 3° and 4°.

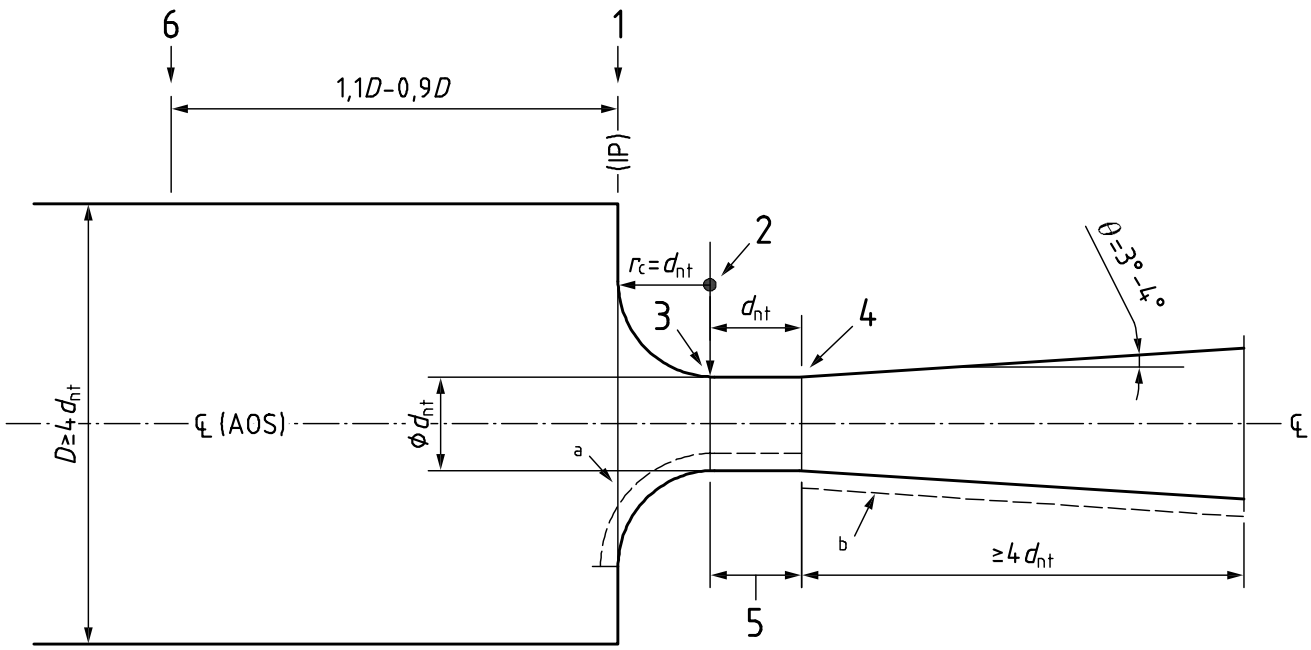

Key

1 inlet plane (physical plane)
2 centre of the inlet torus
3 throat inlet
4 throat exit
5 throat
6 location of pressure tapping

a Cylindrical throat. In this portion, the arithmetic average roughness *Ra* shall not exceed 15 × $10^{-6}d_{nt}$ and the contour shall not deviate from toroidal and cylindrical forms by more than ±0,001d_{nt}.

b The length should be greater than d_{nt} but preferably than 4d_{nt}.

Figure 2 — Cylindrical throat CFN

© ISO 2022 – All rights reserved

Documents
Document Sharing Hub
Full document details: BS EN ISO 9300:2022

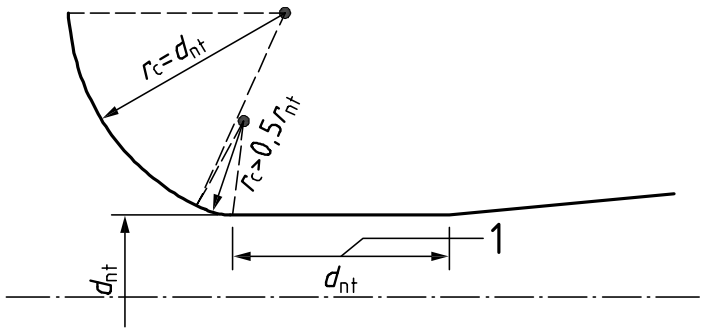

Key
1 throat

Figure 3 — Detail of connection between quarter of torus and cylindrical throat (transition region)

9 Installation requirements

9.1 General requirements for both the standard configurations

9.1.1 Standard configurations

The CFN shall be installed in either of

a) the pipe configuration: a pipe of circular cross-section with $\beta \leqq 0,25$, or

b) the chamber configuration: a large volume (chamber or plenum) upstream the CFN such that β is effectively zero.

The pipe configuration shall contain only a single CFN and shall meet the requirements of 9.2 and 9.1.2 to 9.1.7.

The chamber configuration may contain multiple CFNs in a cluster and shall meet the requirements of 9.3 and 9.1.2 to 9.1.7.

9.1.2 Upstream pressure tapping

The upstream static pressure of CFN shall be measured through one or more wall pressure tappings drilled through the pipe or chamber wall upstream of the CFN.

The wall pressure tappings may be located at upstream or downstream locations specified in 9.2.3 and 9.3.3 provided that they have been demonstrated that the measured pressure can be used reliably to give the upstream stagnation pressure (see Annex J).

If the flow over the pressure tappings cannot be approximated to be at rest, e.g., $\beta < 0,15$, the tapping hole shall meet the following requirements as summarized in Figure 4:

a) the centreline shall be perpendicular to the nozzle AOS,

b) the cross-section of breakthrough into the conduit shall be circular,

© ISO 2022 – All rights reserved
Documents
Document Sharing Hub
Full document details: BS EN ISO 9300:2022

c) the form in the wall shall be cylindrical with a minimum length of $2{,}5d_p$ from the breakthrough where d_p is the diameter of breakthrough,

d) the edge of breakthrough shall be square or rounded to a radius not exceeding $0{,}1d_p$, and

e) the edge of breakthrough shall be free from burrs.

Visual inspections shall confirm that these requirements are met.

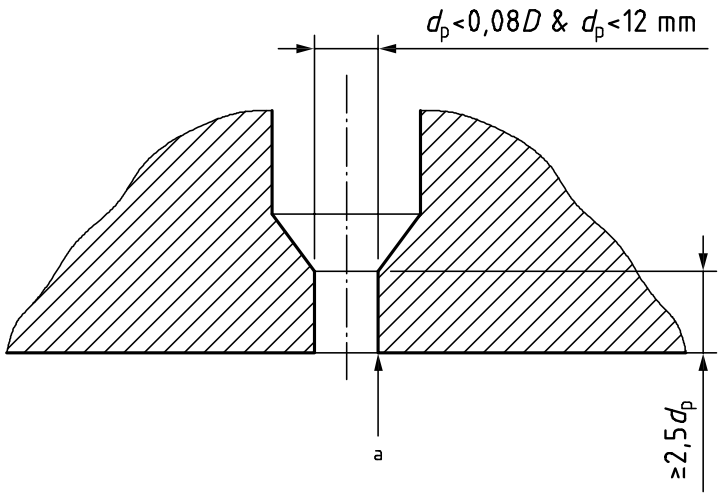

Key

a Edge of hole flush with internal surface of conduit, burr-free and square to a radius not exceeding $0{,}1d_p$.

Figure 4 — Detail of the wall pressure tapping

9.1.3 Downstream pressure tapping

The downstream pressure shall be measured through one or more wall pressure tappings, or estimated, in order to ensure that the nozzle is or all the nozzles are choked. The flow exhausted from the CFN exit should not directly impinge upon any of the pressure tappings.

In some applications, the outlet pressure can be determined without the use of a wall pressure tapping, for example, when the CFN discharges directly into a large space of known pressure, e.g. into atmosphere or large tank, the downstream pressure of the CFN may be represented by the pressure in the large space (see Annex J).

9.1.4 Temperature measurement

The upstream temperature shall be measured using one or more sensors located upstream of the CFN. There is no need to measure the downstream temperature.

The temperature sensor shall not disturb the upstream pressure measurement; to ensure this is the case, the sensor shall not be aligned with the upstream pressure tapping in the flow direction.

Particular care has to be exercised in the selection of the temperature sensor and the insulation of conduit if the stagnation temperature of the flowing gas differs significantly from that of the environment, e.g. by more than 5 K. In such cases, the sensor shall be insensitive to the effect of thermal radiation and the conduit shall be well lagged to minimize heat transfer between the flowing gas and environment (see Annex J). If the temperatures of the flowing gas and the conduit wall differ

© ISO 2022 – All rights reserved

Documents
Document Sharing Hub
Full document details: BS EN ISO 9300:2022

significantly, it is extremely difficult to measure the gas temperature accurately. The heat conduction from the conduit to the sensor shield shall be minimized.

9.1.5 Density measurement

For some applications, it may be desirable to measure directly the gas density upstream of the nozzle; for example, when the molar mass of the gas is not known with sufficient accuracy. The densitometer shall be installed upstream of the inlet pressure and temperature tappings.

To achieve accurate measurement of the flow rate, particular attention shall be paid to:

a) The densitometer shall not disturb the upstream static pressure and temperature measurements.

b) If the densitometer is located in a bypass line from the upstream pipeline or chamber of CFNs, checks shall be carried out to ensure that the gas in the densitometer is the same as that flowing in the pipeline or chamber.

c) The pressure and temperature at the densitometer should be as close as possible to those upstream of the CFN in order to minimize the corrections. The stagnation density of the CFN shall be calculated by Formula (15):

$$\rho_0 = \rho_{\mathrm{den}} \frac{p_0}{p_{\mathrm{den}}} \cdot \frac{T_{\mathrm{den}}}{T_0} \cdot \frac{Z_{\mathrm{den}}}{Z_0} \tag{15}$$

9.1.6 Drain hole

The pipe or chamber may be provided with drain holes to remove the condensate or other foreign substances that may collect in some applications. There shall be no flow through these drain holes while the measurement is in progress.

The drain holes shall be located upstream of the upstream wall pressure tappings in an axial plane different from that of the wall pressure tapping in order not to disturb the upstream static pressure measurement.

The drain holes should preferably follow the specifications of the pressure tapping shown in Figure 4. The axial distance from the drain hole to the plane of the inlet wall pressure tapping shall be greater than 1*D*.

9.1.7 Downstream condition

There is no specification required on the downstream pipe and chamber provided it does not disturb the critical flow in the CFN or CFNs.

© ISO 2022 – All rights reserved
Documents
Document Sharing Hub
Full document details: BS EN ISO 9300:2022

9.2 Pipe configuration

9.2.1 General

Besides 9.1, the pipe configuration shall conform to 9.2.2 to 9.2.4. The requirements are summarized in Figure 5.

9.2.2 Upstream pipe

The upstream pipe shall:

a) be straight,

b) have a circular cross-section,

c) be concentric around the nozzle AOS within $\pm$ 0,02D,

d) have a diameter of greater than $4d_{\mathrm{nt}}$ ($\beta \leq$ 0,25),

e) not deviate from circularity by more than 0,01D for up to 3D upstream the IP, and

f) have an arithmetic average roughness of smaller than $10^{-4}D$ for up to 3D upstream the IP.

If these requirements cannot be met, specific tests are recommended to investigate the influence of the installation conditions or to determine C_{d} by flow calibration using the same pipe.

In the case when $\beta >$ 0,25, the mass flow rate calculated in accordance with Clause 10 may be corrected in accordance with Annex D; however, particular care shall be taken because the static pressure measurement of a high-speed flow may easily result a serious error depending on the location, form, and/or quality of the pressure tapping. Furthermore, the ambiguity of the recovery factor may affect significantly on the measurement and also the pressure drop between the upstream pressure tapping and IP may not be negligible (see Annex J).

Swirl shall not exist in the upstream pipe. If there is certain flow velocity existed in the upstream pipe, swirl-free conditions may be ensured by installing a flow straightener of the design shown in Figure 5 (Étoile straightener) at a distance $l_1 > 5D$ upstream of the IP. Other flow conditioners may be used according to ISO 5167-1 for the upstream installation[1].

© ISO 2022 – All rights reserved

Documents
Document Sharing Hub
Full document details: BS EN ISO 9300:2022

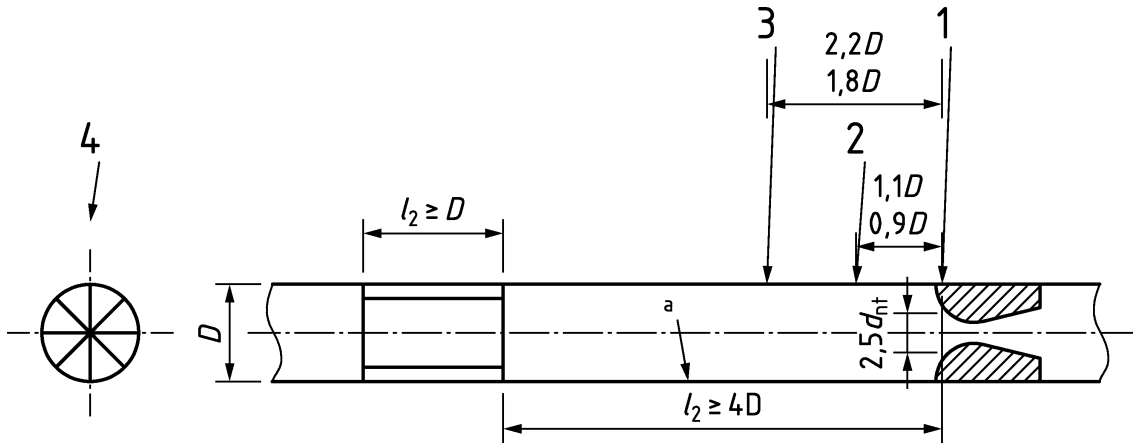

Key

1 IP (Inlet plane)
2 location of pressure tapping
3 location of temperature sensor
4 Etoile straightener with vane thickness adequate to prevent buckling (if the flow velocity in conduit is not negligible)

a In this portion, the surface roughness shall not exceed $10^{-4}D$.

Figure 5 — Installation requirements in a pipe

9.2.3 Pressure measurement

The location of the upstream pressure tapping should be at a distance between 0,9*D* and 1,1*D* upstream of the IP.

If there are multiple tappings, all of them shall be in a plane perpendicular to the nozzle AOS.

The downstream pressure may be measured through a pressure tapping located within 0,5 *D* downstream of the diffuser exit. Locations further downstream can also be used provided there is no substantial pressure change. Other downstream tapping locations may be acceptable if an unchoking test (see H.4) is performed using that tapping location.

9.2.4 Temperature measurement

The upstream temperature may be measured at 1,8*D* to 2,2*D* upstream of the IP. The diameter of the sensor shall be not greater than 0,04*D*.

If it is impracticable to use a sensor of diameter less than 0,04*D*, the sensing element shall be so located that it can be demonstrated that it does not affect the upstream pressure measurement. The sensor may be located further upstream, provided that it has been demonstrated that the measured temperature can be used reliably to give the nozzle inlet stagnation temperature. See Annex J.

© ISO 2022 – All rights reserved
Documents
Document Sharing Hub
Full document details: BS EN ISO 9300:2022

9.3 Chamber configuration

9.3.1 General

Besides 9.1, the chamber configuration shall conform to 9.3.2 to 9.3.5.

9.3.2 Upstream chamber

The CFN can be assumed to be installed in a large volume (chamber) if its nozzle AOS is at least $5d_{nt}$ away from all the chamber walls.

If multiple CFNs are installed in a chamber in parallel, the minimum distance between the nozzle AOSs of any CFNs shall be greater than 6 times the largest throat diameter in order to avoid interference between CFNs[13] to [19]. Testing is recommended to ensure that the performance is not degraded by the interferences between each CFNs and also between each CFNs and chamber walls.

9.3.3 Pressure measurement

The wall pressure tapping in the upstream chamber should preferably be located in a wall perpendicular to the IP and within a distance of $(10 \pm 1)d_{nt}$ from the IP.

9.3.4 Temperature measurement

The temperature sensor in the upstream chamber shall not be located where the flow is stagnated in order to ensure that the measured temperature represents the gas temperatures flowing into each CFN. Multiple sensors are recommended in a large chamber because of the high possibility of the stagnation of flow and/or temperature stratification.

9.3.5 Back-pressure ratio

If multiple CFNs are installed in a chamber, the back-pressure ratio across the chamber shall be smaller than the smallest value among the critical back-pressure ratios of all CFNs. See Annex H.

10 Calculations

10.1 General

If the CFN satisfies the requirements in Clauses 8 and 9, its mass flow rate should be calculated in accordance with 10.2 to 10.6.

It is noted again that the temperature of the CFN in operation is assumed to be in equilibrium with that of the gas because of the isentropic assumption (see Annex J); accordingly, the temperature of the CFN itself is represented by that of the gas in this document. If there is any significant temperature difference observed between the gas, CFN, conduit, and environment, the user should be consulted by an expert [56] (see Annex J).

10.2 Calculation of mass flow rate, q_m

The mass flow rate through a CFN should be calculated by Formula (13) or (14) where A_{nt} should be the cross-section of throat when the CFN is measuring the flow rate, thus calculated by Formula (16);

© ISO 2022 – All rights reserved

Documents
Document Sharing Hub
Full document details: BS EN ISO 9300:2022

$$A_{\mathrm{nt}} = \frac{\pi d_{\mathrm{nt}}^{\ 2}}{4} = \frac{\pi d_{\mathrm{nt0}}^{\ 2}}{4}\left[1 + 2\alpha\left(T_1 - T_{\mathrm{nt,0}}\right)\right]^2 \tag{16}$$

It is noted that this equation is not for correcting the effect of non-isentropic flow caused by large temperature differences. See 10.1 and Annex J.

10.3 Calculation of discharge coefficient, C_{d}

10.3.1 The discharge coefficient of the CFN should be calculated by Formula (17);

$$C_{\mathrm{d}} = \left(a - bR_{\mathrm{e}}^{\ -n}\right) - \frac{\left(c - dR_{\mathrm{e}}^{\ -n}\right)}{1 + \exp\left(e - \frac{R_{\mathrm{e}}}{f}\right)} \tag{17}$$

The coefficients a, b, c, d, e, f, and n are given in Table 1 for each type of CFN (see Annexes F and G). They are valid in each specified Reynolds number range.

Table 1 — Coefficients a, b, c, d, e, f and n

Toroidal-throat CFN	
$2{,}1 \times 10^4 < R_{\mathrm{e}} < 3{,}2 \times 10^7$	$a = 0{,}9990$ $b = 3{,}415$ $c = 0{,}0031$ $d = 0{,}690$ $e = 10$ $f = 120\ 000$ $n = +0{,}5$
Cylindrical-throat CFN	
$1{,}5 \times 10^5 < R_{\mathrm{e}} < 1{,}2 \times 10^7$	$a = 1{,}0000$ $b = 6{,}341$ $c = 0{,}009$ for air $c = 0{,}008$ for natural gas $d = 3{,}000$ $e = 6$ $f = 170\ 000$ $n = +0{,}5$

If the gas has the significant vibrational relaxation effect, e.g. CO_2 and SF_6, the discharge coefficient may cause more than 1 % if the steady state critical flow function (see 10.4) is used in small CFNs. See B.5.

For the purpose of calculation verification, the values of discharge coefficient are given in Annex A.

10.3.2 The relative uncertainty of the discharge coefficients calculated by using Formula (17) and Table 1 is 0,3 % at the 95 % confidence level.

© ISO 2022 – All rights reserved
Documents
Document Sharing Hub
Full document details: BS EN ISO 9300:2022

10.4 Calculation of critical flow function, C^* or C^*_D

The value of critical flow function may be computed by any method of demonstrable accuracy. It is noted that most of the methods normally suppose that the state change of gas along the flow is in equilibrium, thus they cause serious errors if the gas cannot reach an equilibrium state owing to the rapid change in the fluid properties. See B.5.

Some examples of the applicable method to calculate C^* and C^*_D for natural gases are AGA Report No. 8[20][21], ISO 12213[22] to [24][31] to [35], and ISO 20765[25][26] as the state equation. This approach ensures a relative uncertainty on C^* of 0,1 % at 95 % confidence level. Alternatively, any other state equation with comparable uncertainty can be used.

The REFPROP, thermodynamic database[40], may be one of the most convenient and accurate ways to calculate C^*. It realizes the calculations based on all the state equations in the standards mentioned above. See B.3 and Annex J.

For some gases, the values of C^* shall be calculated in accordance with Annex C without using any specific software. The equations were obtained by curve fittings on the calculation results produced by REFPROP 10.0.

10.5 Conversion of measured pressure into stagnation pressure

The inlet stagnation pressure, p_0, should be calculated by Formula (18):

$$p_0 = \left(1 + \frac{\kappa - 1}{2} M_a^{\,2}\right)^{\frac{\kappa}{\kappa - 1}} p_1 \tag{18}$$

If $\beta \leq 0{,}15$, the conversion is ignorable, thus p_0 is given by Formula (19):

$$p_0 = p_1 \tag{19}$$

10.6 Conversion of measured temperature into stagnation temperature

The inlet stagnation temperature, T_0, should be calculated by Formula (20):

$$T_0 = \frac{2 + (\kappa - 1) M_a^{\,2}}{2 + R_f (\kappa - 1) M_a^{\,2}} T_1 \tag{20}$$

If $\beta \leq 0{,}25$, the effect is negligible, thus T_0 is given by Formula (21):

$$T_0 = T_1 \tag{21}$$

The recovery factor R_f may be calculated by any reliable method. If $\beta \leq 0{,}25$, it may be approximated by Formula (22):

$$R_f = \sqrt{P_r} \tag{22}$$

where P_r is the Prandtl number of the gas. See Annex J.

10.7 Calculation of viscosity

The value of viscosity may be computed by any method of demonstrable accuracy. The REFPROP may be one of the most convenient and accurate ways to calculate the viscosity.

Documents
Document Sharing Hub

© ISO 2022 – All rights reserved

Full document details: BS EN ISO 9300:2022

For some gases, the value of viscosity may be calculated in accordance with Annex I without using any specific software. The equations were obtained by curve fits to the calculation results produced by REFPROP 10.0

11 Estimation of critical back-pressure ratio

11.1 For a traditional diffuser at Reynolds numbers higher than 2 × 10^5

The critical back-pressure ratio r_{CBP} for the traditional diffuser at Reynolds numbers higher than 2 × 10^5 may be estimated by Formula (23)[3];

$$r_{CBP} = 0,8\frac{p_{2i}}{p_0} + 0,2\left(\frac{2}{\kappa+1}\right)^{\frac{k}{k-1}} \tag{23}$$

where p_{2i} is the theoretical static pressure at the diffuser exit when the nozzle attains the critical flow velocity but the flow in the diffuser is fully subsonic and fully attached, assuming one-dimensional isentropic flow. Formula (23) is graphed in Figure 6, by which the values of r_{CBP} may be estimated using A_2/A_{nt} or length of the frustum diffuser l at each wall half-angle θ. As seen in the figure, the pressure ratio r_{CBP} will not significantly become higher by lengthening the diffuser such that $A_2/A_{nt} > 4$, e.g., $l/d_{nt} > 7$ at $\theta = 4°$.

© ISO 2022 – All rights reserved
Documents
Document Sharing Hub
Full document details: BS EN ISO 9300:2022

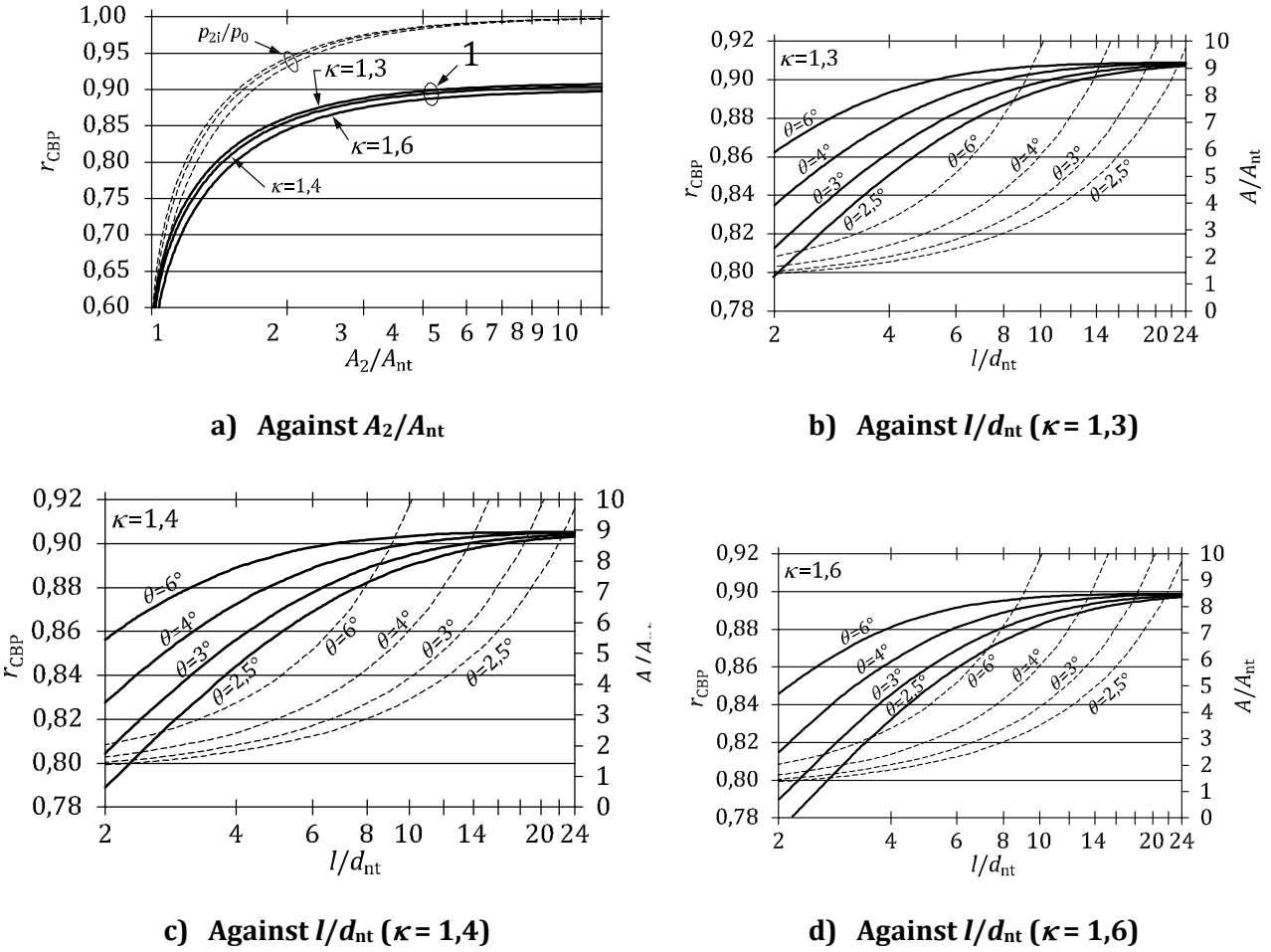

a) Against A_2/A_{nt}

b) Against l/d_{nt} (κ = 1,3)

c) Against l/d_{nt} (κ = 1,4)

d) Against l/d_{nt} (κ = 1,6)

Key

1 Formula (23)

——— r_{CBP}

- - - - - A/A_{nt}

Figure 6 — Maximum permissible back-pressure ratio r_{CBP} calculated by Formula (23)

κ is not necessary to be accurate because the sensitivity on κ is not so high as seen in Figure 6 as well as Formula (23) gives only an estimation.

Higher back-pressure ratios may be used provided that it can be verified that the CFN chokes at those ratios. Pressure ratios of 0,9 may be achieved at high Reynolds numbers if the diffuser is sufficiently long and has an adequate form and quality.

11.2 For any diffuser at low Reynolds numbers

For any CFN with a diffuser, it is practically impossible to predict r_{CBP} at low Reynolds number, e.g. lower than 2×10^5, because premature unchoking phenomenon (PUP) may occur that results in serious decrease in the discharge coefficient by an amount that is difficult to quantify. See 8.1.4 and Annex H. When the Reynolds number is lowered, the decrease of discharge coefficient caused by the PUP starts from an ignorable amount at a Reynolds number specific to each CFN and installing condition, and then, depending on the Reynolds number, it can reach several 10 % at the back-pressure ratios where the CFN should choke by the diffuser effect in theory (where the back-pressure ratio is greater than the critical pressure ratio). The amount of decrease at a specific back-pressure ratio at a specific Reynolds number is practically unpredictable.

© ISO 2022 – All rights reserved

Documents
Document Sharing Hub
Full document details: BS EN ISO 9300:2022

If the Reynolds number is in the range where PUP is suspected, but is not sufficiently low to be of concern, most CFNs should choke at a back-pressure ratio slightly smaller than the critical pressure ratio (e.g. 0,5, see Figure H.1); however, if the Reynolds number approaches the lowest extreme of this document, it is recommended to keep the back-pressure ratio less than 0,25[7] to [12].

If the exact critical back-pressure ratio is essential for the system operation, it is recommended to measure r_{CBP} using the given CFN with its own upstream and downstream conduits (see Annex J). The PUP may be very sensitive to the CFN form and also to its installing condition.

11.3 For CFNs without diffuser or with very short diffuser

For CFNs without a diffuser or with a very short diffuser such as l = 0,1d_{nt}, it is recommended to keep the back-pressure ratio always smaller than 0,35 regardless of the Reynolds number. If the difference of flow rate by 0,1 % is ignorable for the application, the critical back-pressure ratio of 0,5 (or slightly smaller ratio than the critical pressure ratio, see Figure H.5) may be applicable.

12 Uncertainties in the measurement of flow rate

12.1 General

The uncertainty associated with each measurement of mass flow rate is an essential consideration[41][44][46][48] and shall be calculated and reported whenever a measurement is claimed to conform to this document. The uncertainty for a mass flow rate measurement may be expressed in relative terms as a percentage, in relative (dimensionless) terms, or in absolute terms with the same units as the given mass flow rate. Uncertainty may be expressed as a standard uncertainty, u (at a confidence level of 68 %), or as a combined standard uncertainty, u_c, or as an expanded uncertainty U, which is usually the final result with a 95 % confidence level. The uncertainty for mass flow rate as determined using Formula (13) is most simply evaluated using relative uncertainties expressed as a percentage. The quantities and notation herein refer to relative uncertainties expressed as percentages of the average value. Uncertainty calculations should be performed in accordance with ISO/IEC Guide 98-1[42][43].

In general, the expanded uncertainty for a measurand can be calculated from the combined standard uncertainty, comprising the relative Type A uncertainty, which is obtained using statistics, and the relative Type B uncertainty, which is obtain using methods other than statistics. These are combined by root-sum-of-squares (RSS) as given by Formula (24);

$$U(y) = ku_c(y) = k\sqrt{u_A^2(y) + u_B^2(y)} \tag{24}$$

where k is the coverage factor and k = 1 indicates a 68 % confidence level and k = 2 is generally appropriate to calculate a 95 % confidence level uncertainty. The Type A uncertainty is the standard deviation, at 68 % confidence level, of the replicated measurements of mass flow rate from the repeatability and reproducibility test results. The relative Type B uncertainty is obtained from evaluations of the uncertainty of the components in the equation used to calculate the mass flow rate. It is common and usually more convenient to perform uncertainty calculations in relative uncertainty terms as shown in the practical computation methods that follow. Using relative uncertainty terms allows the use of normalized sensitivity coefficients, which are the exponents of the respective factors in the governing equation for the quantity being assessed.

Using a coverage factor k = 2 to obtain a 95 % confidence level uncertainty is appropriate when the system has a large number of degrees of freedom as is normally assumed for Type B uncertainty components. The degrees of freedom for the Type A component, calculated from the standard deviation of n repeated measurements, is n-1 and this can lead to larger values of k when the number of replicates

© ISO 2022 – All rights reserved
AVA Documents Document Sharing Hub
Full document details: BS EN ISO 9300:2022

is approximately 20 or less. The Welch-Satterthwaite formula[47][49] allows calculation of effective degrees of freedom and when the repeatability (Type A component) is small relative to the Type B components, leads to a coverage factor of approximately 2 for 95 % confidence level. In most applications, k = 2 is an acceptable value to obtain 95 % confidence level uncertainties.

12.2 Practical computation of uncertainty

Substituting Formula (12) into Formula (13), the governing equation for mass flow rate, q_m, through a CFN is as given by Formula (25);

$$q_m = A^* C_\mathrm{d} C^* \frac{p_0}{\sqrt{\left(\frac{R}{M}\right) T_0}} \tag{25}$$

The uncertainty of a flow rate measurement should be calculated from the standard deviation of the available flow measurement data plus evaluations of uncertainty of the individual quantities in the governing equation. In most cases, uncertainty components can be assumed to be independent and uncorrelated, but there are certain cases where correlated uncertainties are an issue (see 12.3).

Because Formula (24) is comprised of products, it is simplest to use normalized sensitivity coefficients and relative uncertainties expressed as percentages (the dimensional uncertainty divided by the average value of the respective component). In this way, the sensitivity coefficients for a function like Formula (24) are the exponents of the respective components. In the case where the uncertainty components are assumed to be independent and uncorrelated or when the respective correlated effects are negligible, a practical working formula for calculating the relative combined standard uncertainty by RSS is given by Formula (26);

$$u_\mathrm{c}(q_m) = \sqrt{\begin{aligned} & u_\mathrm{A}^2(q_m) + u_\mathrm{B}^2(C_\mathrm{d}) + u_\mathrm{B}^2(A^*) + u_\mathrm{B}^2(C^*) + u_\mathrm{B}^2(p_0) \\ & \quad + \frac{1}{4}\left[u_\mathrm{B}^2(M) + u_\mathrm{B}^2(T_0)\right] \end{aligned}} \tag{26}$$

where the squares are variances.

The Type A relative uncertainty term, $u_\mathrm{A}(q_m)$, can be calculated from the standard deviation of the available replicated measurement data. The Type B relative uncertainty terms in Formula (20) can be calculated from the uncertainty of each of the factors with the absolute uncertainties of each component being divided by the magnitude of that component to determine the relative uncertainties. Then the relative uncertainty terms are squared and combined by the RSS relationship.

Each of the Type B uncertainty components has its own subset of uncertainty sources. Uncertainty components that should be considered are

a) long term reproducibility (drift) of the discharge coefficient,

b) pressure sensor calibration,

c) temperature sensor calibrations,

d) drift between periodic calibrations,

e) temperature effects on the CFN mass flow, e.g. stem conduction, sampling errors,

f) thermal expansion of the throat,

© ISO 2022 – All rights reserved

Documents
Document Sharing Hub
Full document details: BS EN ISO 9300:2022

g) interference effects between CFNs in a chamber,

h) species effects (calibration in one gas, usage in another),

i) leaks,

j) contamination of CFN surfaces with dirt, and

k) pressure effects e.g. errors in $C*$ because real gas effects are not perfectly captured (see Annex B).

An example of a sub-component study is presented in Figure 7, which shows the relationship between diameter uncertainties (of various magnitudes) and area uncertainties.

12.3 Correlated uncertainty components

In some measurement situations the components are not fully or predominately independent. If a component varies depending on the value of another component, they are not independent, and the correlation of variables shall be considered.

For the measurement cases where the terms in the governing equation cannot be assumed to be independent and the degree of correlation is significant, the computations become somewhat more complex because the respective relative correlation terms should be included. The correlated variable terms are computed or evaluated from data for the respective interacting terms.

For example, both $C*$ and M depend on the gas composition. When these terms are included, the combined relative uncertainty equation becomes Formula (27);

$$u_{\mathrm{c}}(q_m)=\sqrt{\begin{array}{c}u_{\mathrm{A}}^2(q_m)+u_{\mathrm{B}}^2(C_{\mathrm{d}})+u_{\mathrm{B}}^2(A*)+u_{\mathrm{B}}^2(C*)+u_{\mathrm{B}}^2(p_0)\\ +\frac{1}{4}u_{\mathrm{B}}^2(M)+\frac{1}{4}u_{\mathrm{B}}^2(T_0)+\frac{1}{2}c_{\mathrm{v}}(M,x_i)\end{array}} \tag{27}$$

where $c_v(M, x_i)$ is the covariance of the molecular weight and gas composition, as evaluated using data and where other correlated uncertainty terms have been left out because they are either zero or negligible. For example, the deviation of the value used for the universal gas constant, R is so low, or if the same value of R is used during calibration and usage, that its uncertainty can be neglected.

For some gases at high pressure, the normalized sensitivity coefficients for the stagnation pressure and temperature can deviate from unity due to contributions from the critical flow function. For example, for natural gas at room temperature and 9 MPa the sensitivity coefficient for pressure increases from 1 to 1,03[51]. In such cases, the upper value should be used to bound the effect.

© ISO 2022 – All rights reserved
Documents
Document Sharing Hub
Full document details: BS EN ISO 9300:2022

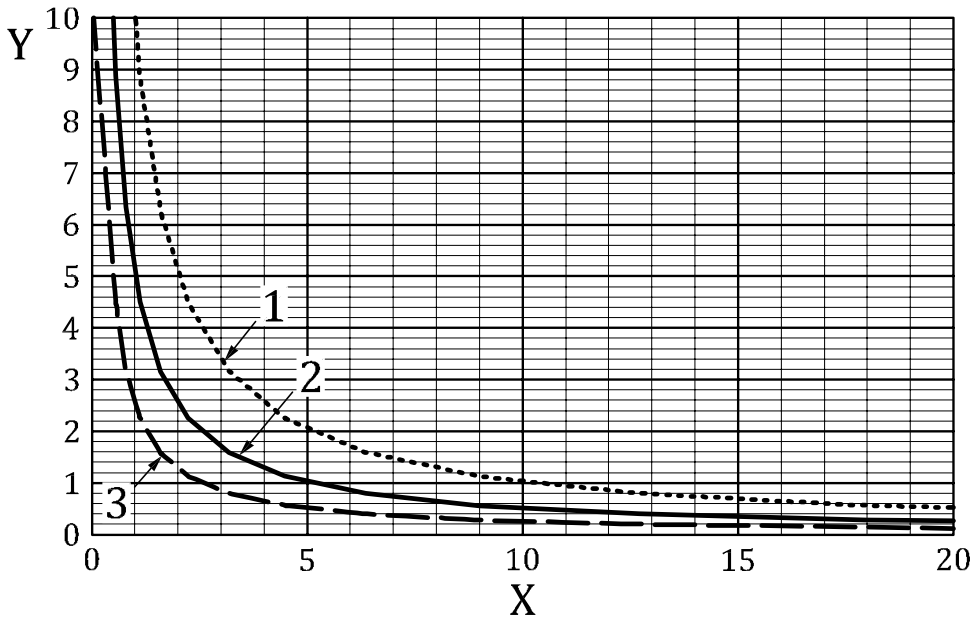

Key

X d_{nt} (mm)
Y uncertainty in A_{nt} (%)
1 0,050 mm uncertainty in d_{nt}
2 0,025 mm uncertainty in d_{nt}
3 0,013 mm uncertainty in d_{nt}

Figure 7 — Percent uncertainty in CFN throat area due to uncertainty in throat diameter measurement

CFNs used in a plenum also have significant correlated uncertainty in pressure, temperature and C_d calibration.

© ISO 2022 – All rights reserved

Documents
Document Sharing Hub
Full document details: BS EN ISO 9300:2022

Annex A
(informative)

Discharge coefficient values

For the purpose of calculation verification, Table A.1 gives the discharge coefficient values for a given set of Reynolds numbers calculated by Formula (17) with the coefficient in Table 1. The curves are graphed in Figure A.1.

Table A.1 — Discharge coefficients of CFNs

Toroidal throat	
Reynolds number R_e	**Discharge coefficient** C_d
$2{,}1 \times 10^4$	0,975 4
3×10^4	0,979 3
5×10^4	0,983 7
1×10^5	0,988 2
3×10^5	0,992 8
5×10^5	0,994 2
1×10^6	0,995 2
$1{,}5 \times 10^6$	0,993 9
3×10^6	0,994 3
5×10^6	0,994 7
1×10^7	0,995 0
$3{,}2 \times 10^7$	0,995 4

Cylindrical throat		
Reynolds number R_e	**Discharge coefficient (air)** C_d	**Discharge coefficient (natural gas)** C_d
$1{,}5 \times 10^5$	0,983 6	0,983 6
2×10^5	0,985 8	0,985 8
3×10^5	0,988 4	0,988 4
5×10^5	0,990 9	0,990 8
7×10^5	0,991 8	0,991 7
1×10^6	0991 3	0,990 8
$1{,}3 \times 10^6$	0,989 9	0,989 1
2×10^6	0,989 7	0,998 7
3×10^6	0,990 1	0,989 1
5×10^6	0,990 5	0989 5
$1{,}2 \times 10^7$	0,991 0	0,990 0

© ISO 2022 – All rights reserved
Documents
Document Sharing Hub
Full document details: BS EN ISO 9300:2022