BS EN ISO 9809-2:2019

BSI Standards Publication

Gas cylinders – Design, construction and testing of refillable seamless steel gas cylinders and tubes

Part 2: Quenched and tempered steel cylinders and tubes with tensile strength greater than or equal to 1 100 MPa (ISO 9809-2:2019)

Documents
Document Sharing Hub

Full document details: BS EN ISO 9809-2:2019

National foreword

This British Standard is the UK implementation of EN ISO 9809-2:2019. It supersedes BS EN ISO 9809-2:2010, which is withdrawn.

The UK participation in its preparation was entrusted to Technical Committee PVE/3/3, Transportable Gas Containers - Cylinder Design, Construction and Testing at the Time of Manufacture.

A list of organizations represented on this committee can be obtained on request to its secretary.

This publication does not purport to include all the necessary provisions of a contract. Users are responsible for its correct application.

© The British Standards Institution 2019
Published by BSI Standards Limited 2019

ISBN 978 0 580 94734 6

ICS 23.020.35

Compliance with a British Standard cannot confer immunity from legal obligations.

This British Standard was published under the authority of the Standards Policy and Strategy Committee on 31 October 2019.

Amendments/corrigenda issued since publication

Date	Text affected

Documents
Document Sharing Hub

Full document details: BS EN ISO 9809-2:2019

EUROPEAN STANDARD

NORME EUROPÉENNE

EUROPÄISCHE NORM

EN ISO 9809-2

October 2019

ICS 23.020.35

Supersedes EN ISO 9809-2:2010

English Version

Gas cylinders - Design, construction and testing of refillable seamless steel gas cylinders and tubes - Part 2: Quenched and tempered steel cylinders and tubes with tensile strength greater than or equal to 1 100 MPa (ISO 9809-2:2019)

Bouteilles à gaz - Conception, construction et essais des bouteilles à gaz et des tubes rechargeables en acier sans soudure - Partie 2: Bouteilles et tubes en acier trempé et revenu ayant une résistance à la traction supérieure ou égale à 1 100 MPa (ISO 9809-2:2019)

Gasflaschen - Auslegung, Herstellung und Prüfung von wiederbefüllbaren nahtlosen Gasflaschen aus Stahl - Teil 2: Flaschen aus vergütetem Stahl mit einer Zugfestigkeit größer als oder gleich 1 100 MPa (ISO 9809-2:2019)

This European Standard was approved by CEN on 25 July 2019.

CEN members are bound to comply with the CEN/CENELEC Internal Regulations which stipulate the conditions for giving this European Standard the status of a national standard without any alteration. Up-to-date lists and bibliographical references concerning such national standards may be obtained on application to the CEN-CENELEC Management Centre or to any CEN member.

This European Standard exists in three official versions (English, French, German). A version in any other language made by translation under the responsibility of a CEN member into its own language and notified to the CEN-CENELEC Management Centre has the same status as the official versions.

CEN members are the national standards bodies of Austria, Belgium, Bulgaria, Croatia, Cyprus, Czech Republic, Denmark, Estonia, Finland, France, Germany, Greece, Hungary, Iceland, Ireland, Italy, Latvia, Lithuania, Luxembourg, Malta, Netherlands, Norway, Poland, Portugal, Republic of North Macedonia, Romania, Serbia, Slovakia, Slovenia, Spain, Sweden, Switzerland, Turkey and United Kingdom.

EUROPEAN COMMITTEE FOR STANDARDIZATION
COMITÉ EUROPÉEN DE NORMALISATION
EUROPÄISCHES KOMITEE FÜR NORMUNG

CEN-CENELEC Management Centre: Rue de la Science 23, B-1040 Brussels

© 2019 CEN All rights of exploitation in any form and by any means reserved worldwide for CEN national Members.

Ref. No. EN ISO 9809-2:2019 E

Documents
Document Sharing Hub

Full document details: BS EN ISO 9809-2:2019

Contents

Page

European foreword **3**

Documents
Document Sharing Hub

Full document details: BS EN ISO 9809-2:2019

European foreword

This document (EN ISO 9809-2:2019) has been prepared by Technical Committee ISO/TC 58 "Gas cylinders" in collaboration with Technical Committee CEN/TC 23 “Transportable gas cylinders” the secretariat of which is held by BSI.

This European Standard shall be given the status of a national standard, either by publication of an identical text or by endorsement, at the latest by April 2020, and conflicting national standards shall be withdrawn at the latest by April 2020.

Attention is drawn to the possibility that some of the elements of this document may be the subject of patent rights. CEN shall not be held responsible for identifying any or all such patent rights.

This document supersedes EN ISO 9809-2:2010.

This document has been prepared under a mandate given to CEN by the European Commission and the European Free Trade Association.

According to the CEN-CENELEC Internal Regulations, the national standards organizations of the following countries are bound to implement this European Standard: Austria, Belgium, Bulgaria, Croatia, Cyprus, Czech Republic, Denmark, Estonia, Finland, France, Germany, Greece, Hungary, Iceland, Ireland, Italy, Latvia, Lithuania, Luxembourg, Malta, Netherlands, Norway, Poland, Portugal, Republic of North Macedonia, Romania, Serbia, Slovakia, Slovenia, Spain, Sweden, Switzerland, Turkey and the United Kingdom.

Endorsement notice

The text of ISO 9809-2:2019 has been approved by CEN as EN ISO 9809-2:2019 without any modification.

Documents
Document Sharing Hub

Full document details: BS EN ISO 9809-2:2019

This page deliberately left blank

Documents
Document Sharing Hub

Full document details: BS EN ISO 9809-2:2019

INTERNATIONAL STANDARD

ISO 9809-2

Third edition
2019-08

Gas cylinders — Design, construction and testing of refillable seamless steel gas cylinders and tubes —

Part 2: Quenched and tempered steel cylinders and tubes with tensile strength greater than or equal to 1 100 MPa

Bouteilles à gaz — Conception, construction et essais des bouteilles à gaz et des tubes rechargeables en acier sans soudure —

Partie 2: Bouteilles et tubes en acier trempé et revenu ayant une résistance à la traction supérieure ou égale à 1 100 MPa

Reference number
ISO 9809-2:2019(E)

Documents
Document Sharing Hub

© ISO 2019

Full document details: BS EN ISO 9809-2:2019

COPYRIGHT PROTECTED DOCUMENT

© ISO 2019

All rights reserved. Unless otherwise specified, or required in the context of its implementation, no part of this publication may be reproduced or utilized otherwise in any form or by any means, electronic or mechanical, including photocopying, or posting on the internet or an intranet, without prior written permission. Permission can be requested from either ISO at the address below or ISO's member body in the country of the requester.

ISO copyright office
CP 401 • Ch. de Blandonnet 8
CH-1214 Vernier, Geneva
Phone: +41 22 749 01 11
Fax: +41 22 749 09 47
Email: copyright@iso.org
Website: www.iso.org

Published in Switzerland

© ISO 2019 – All rights reserved

Documents
Document Sharing Hub

Full document details: BS EN ISO 9809-2:2019

Contents

Page

Foreword ..... **v**
Introduction ..... **vi**
1 Scope **1**
2 Normative references **1**
3 Terms and definitions **1**
4 Symbols **3**
5 Inspection and testing **4**
6 Materials **4**
6.1 General requirements 4
6.2 Controls on chemical composition 5
6.3 Heat treatment 6
6.4 Failure to meet test requirements 6
7 Design **7**
7.1 General requirements 7
7.2 Limitation on tensile strength 7
7.3 Design of cylindrical shell thickness 7
7.4 Design of convex ends (heads and bases) 8
7.5 Design of concave base ends 8
7.6 Neck design 10
7.7 Foot rings 11
7.8 Neck rings 11
7.9 Design drawing 11
8 Construction and workmanship **11**
8.1 General 11
8.2 Wall thickness 11
8.3 Surface imperfections 12
8.4 Ultrasonic examination 12
8.5 Out-of-roundness 12
8.6 Mean diameter 12
8.7 Straightness 12
8.8 Verticality and stability 12
8.9 Neck threads 13
9 Type approval procedure **13**
9.1 General requirements 13
9.2 Prototype tests 14
9.2.1 General requirements 14
9.2.2 Verification of hardness/tensile correlation 15
9.2.3 Pressure cycling test 16
9.2.4 Flawed cylinder burst test 17
9.2.5 Flawed cylinder cycle test 19
9.2.6 Base check 20
9.2.7 Bend test and flattening test 20
9.2.8 Torque test for taper thread only 21
9.2.9 Shear stress calculation for parallel threads 21
9.3 Type approval certificate 22
10 Batch tests **22**
10.1 General requirements 22
10.2 Tensile test 24
10.3 Impact test 25
10.4 Hydraulic bursting test 27

AVA Documents
Document Sharing Hub

© ISO 2019 – All rights reserved

Full document details: BS EN ISO 9809-2:2019

10.4.1 Test installation ... 27
10.4.2 Test conditions ... 28
10.4.3 Interpretation of test results ... 29

11 Tests/examinations on every cylinder ... 30
11.1 General ... 30
11.2 Hydraulic test ... 30
11.2.1 Proof pressure test ... 30
11.2.2 Volumetric expansion test ... 30
11.3 Hardness test ... 30
11.4 Leak test ... 31
11.5 Capacity check ... 31

12 Certification ... 31

13 Marking ... 31

Annex A (normative) **Description and evaluation of manufacturing imperfections in seamless gas cylinders ... 32**

Annex B (normative) **Ultrasonic examination ... 45**

Annex C (informative) **Example of type approval certificate ... 50**

Annex D (informative) **Example of acceptance certificate ... 51**

Annex E (informative) **Bend stress calculation ... 54**

Annex F (informative) **An example of shear strength calculation for parallel threads ... 55**

Bibliography ... 57

© ISO 2019 – All rights reserved
Documents
Document Sharing Hub
Full document details: BS EN ISO 9809-2:2019

Foreword

ISO (the International Organization for Standardization) is a worldwide federation of national standards bodies (ISO member bodies). The work of preparing International Standards is normally carried out through ISO technical committees. Each member body interested in a subject for which a technical committee has been established has the right to be represented on that committee. International organizations, governmental and non-governmental, in liaison with ISO, also take part in the work. ISO collaborates closely with the International Electrotechnical Commission (IEC) on all matters of electrotechnical standardization.

The procedures used to develop this document and those intended for its further maintenance are described in the ISO/IEC Directives, Part 1. In particular, the different approval criteria needed for the different types of ISO documents should be noted. This document was drafted in accordance with the editorial rules of the ISO/IEC Directives, Part 2 (see www.iso.org/directives).

Attention is drawn to the possibility that some of the elements of this document may be the subject of patent rights. ISO shall not be held responsible for identifying any or all such patent rights. Details of any patent rights identified during the development of the document will be in the Introduction and/or on the ISO list of patent declarations received (see www.iso.org/patents).

Any trade name used in this document is information given for the convenience of users and does not constitute an endorsement.

For an explanation of the voluntary nature of standards, the meaning of ISO specific terms and expressions related to conformity assessment, as well as information about ISO's adherence to the World Trade Organization (WTO) principles in the Technical Barriers to Trade (TBT) see www.iso.org/iso/foreword.html.

This document was prepared by Technical Committee ISO/TC 58, *Gas cylinders*, Subcommittee SC 3, *Cylinder design*.

This third edition cancels and replaces the second edition (ISO 9809-2:2010), which has been technically revised. The changes compared to the previous edition are as follows:

— water capacity extended from below 0,5 l and up to and including 450 l;

— batch size for tubes now introduced;

— bend test retained only for prototype tests;

— test requirements for check analysis (tolerances modified);

— new test requirements for threads introduced including an informative Annex F;

— original European Annexes now incorporated into the body of this document;

— Annex A "Manufacturing imperfections" now aligned with ISO/TR 16115.

Any feedback or questions on this document should be directed to the user's national standards body. A complete listing of these bodies can be found at www.iso.org/members.html.

© ISO 2019 – All rights reserved

Documents
Document Sharing Hub
Full document details: BS EN ISO 9809-2:2019

Introduction

This document provides a specification for the design, manufacture, inspection and testing of a seamless steel cylinder and tube. The objective is to balance design and economic efficiency against international acceptance and universal utility.

ISO 9809 (all parts) aims to eliminate existing concern; about climate, duplicate inspections and restrictions because of a lack of definitive International Standards.

This document is intended to be used under a variety of regulatory regimes, and has been written so that it is suitable to be referenced in the UN Model Regulations[11].

© ISO 2019 – All rights reserved
Documents
Document Sharing Hub
Full document details: BS EN ISO 9809-2:2019

Gas cylinders — Design, construction and testing of refillable seamless steel gas cylinders and tubes —

Part 2: Quenched and tempered steel cylinders and tubes with tensile strength greater than or equal to 1 100 MPa

1 Scope

This document specifies minimum requirements for the material, design, construction and workmanship, manufacturing processes, examination and testing at time of manufacture for refillable seamless steel gas cylinders and tubes with water capacities up to and including 450 l.

it is applicable to cylinders and tubes for compressed, liquefied and dissolved gases and for quenched and tempered steel cylinders and tubes with an actual tensile strength R_{ma} ≥ 1 100 MPa.

It is not applicable to cylinders and tubes with $R_{ma,\ max}$ > 1 300 MPa for diameters >140 mm and guaranteed wall thicknesses a' ≥ 12 mm and for cylinders and tubes with $_{Rma,\ max}$ > 1 400 MPa for diameters ≤140 mm and guaranteed wall thicknesses a' ≥ 6 mm because, beyond these limits, additional requirements can apply.

2 Normative references

The following documents are referred to in the text in such a way that some or all of their content constitutes requirements of this document. For dated references, only the edition cited applies. For undated references, the latest edition of the referenced document (including any amendments) applies.

ISO 148-1, *Metallic materials — Charpy pendulum impact test — Part 1: Test method*

ISO 6506-1, *Metallic materials — Brinell hardness test — Part 1: Test method*

ISO 6508-1, *Metallic materials — Rockwell hardness test — Part 1: Test method*

ISO 6892-1, *Metallic materials — Tensile testing — Part 1: Method of test at room temperature*

ISO 9712, *Non-destructive testing — Qualification and certification of NDT personnel*

ISO 10286, *Gas cylinders — Terminology*

ISO 11114-1, *Gas cylinders — Compatibility of cylinder and valve materials with gas contents — Part 1: Metallic materials*

ISO 11114-4, *Transportable gas cylinders — Compatibility of cylinder and valve materials with gas contents — Part 4: Test methods for selecting steels resistant to hydrogen embrittlement*

ISO 13341, *Gas cylinders — Fitting of valves to gas cylinders*

ISO 13769, *Gas cylinders — Stamp marking*

3 Terms and definitions

For the purposes of this document, the terms and definitions given in ISO 10286 and the following apply.

© ISO 2019 – All rights reserved

AVA Documents Document Sharing Hub
Full document details: BS EN ISO 9809-2:2019

ISO and IEC maintain terminological databases for use in standardization at the following addresses:

— ISO Online browsing platform: available at https://www.iso.org/obp

— IEC Electropedia: available at http://www.electropedia.org/

3.1
batch
quantity of up to 200 for cylinders and up to 50 for tubes, plus cylinders/tubes for destructive testing of the same nominal diameter, thickness, length and design made successively on the same equipment, from the same cast of steel and subjected to the same heat treatment for the same duration of time

Note 1 to entry: In this document where not specifically mentioned for "cylinder/tube" only the term "cylinder" will be used.

3.2
burst pressure
p_b
highest pressure reached in a cylinder during a burst test

3.3
design stress factor
F
ratio of equivalent wall stress at test pressure, p_h, to guaranteed minimum yield strength, R_{eg}

3.4
quenching
hardening heat treatment in which a cylinder, which has been heated to a uniform temperature above the upper critical point, Ac_3, of the steel, is cooled rapidly in a suitable medium

3.5
reject
cylinder that has been set aside (Level 2 or Level 3) and not allowed to enter into service

3.6
rendered unserviceable
cylinder that has been treated in such a way as to render it impossible for it to enter into service

Note 1 to entry: Examples for acceptable methods to render cylinders unserviceable can be found in ISO 18119. Any actions on cylinders rendered unserviceable are outside the scope of this document.

3.7
repair
action to return a rejected cylinder to a Level 1 condition

3.8
tempering
toughening heat treatment which follows quenching, in which the cylinder is heated to a uniform temperature below the lower critical point, Ac_1, of the steel

3.9
test pressure
p_h
required pressure applied during a pressure test

Note 1 to entry: Test pressure is used for cylinder wall thickness calculation.

3.10
working pressure
settled pressure of a compressed gas at a uniform reference temperature of 15 °C in a full gas cylinder

© ISO 2019 – All rights reserved
Documents
Document Sharing Hub
Full document details: BS EN ISO 9809-2:2019

3.11
yield strength
stress value corresponding to the upper yield strength, R_{eH}, or for steels which do not exhibit a defined yield, the 0,2 % proof strength (non-proportional extension), $R_{p0,2}$

Note 1 to entry: See ISO 6892-1.

4 Symbols

A	percentage elongation after fracture
a	calculated minimum thickness, in millimetres, of the cylindrical shell
a'	guaranteed minimum thickness, in millimetres, of the cylindrical shell
a_1	guaranteed minimum thickness, in millimetres, of a concave base at the knuckle (see Figure 2)
a_2	guaranteed minimum thickness, in millimetres, at the centre of a concave base (see Figure 2)
b	guaranteed minimum thickness, in millimetres, at the centre of a convex base (see Figure 1)
c	maximum permissible deviation of burst profile, in millimetres (see Figure 13)
d	depth of artificial flaw, in millimetres, in flawed cylinder burst test and flawed cylinder cycle test (see Figure 5)
D	nominal outside diameter of the cylinder, in millimetres (see Figure 1 and Figure 2)
D_c	external diameter, in millimetres, of cutter milling tool for flawed cylinder burst test and flawed cylinder cycle test (see Figure 5)
D_f	diameter, in millimetres, of former (see Figure 6)
F	design stress factor (variable) (see 3.3)
H	outside height, in millimetres, of domed part (convex head or base end) (see Figure 1)
h	outside depth (concave base end), in millimetres (see Figure 2)
l_o	length of artificial flaw, in millimetres, in flawed cylinder burst test and flawed cylinder cycle test (see Figure 5)
L_1	length of cylindrical part of the cylinder, in millimetres (see Figure 3)
L_o	original gauge length, in millimetres, as defined in ISO 6892-1 (see Figure 8)
p_b	measured burst pressure, in bars, above atmospheric pressure NOTE 1 bar = 10^5 Pa = 0,1 MPa.
p_f	measured failure pressure, in bars, above atmospheric pressure
p_h	hydraulic test pressure, in bars, above atmospheric pressure
p_y	observed pressure when cylinder starts yielding during hydraulic bursting test, in bars, above atmospheric pressure
r	inside knuckle radius, in millimetres (see Figure 1 and Figure 2)

© ISO 2019 – All rights reserved

Documents
Document Sharing Hub
Full document details: BS EN ISO 9809-2:2019

r_c cutter tip radius of milling tool for artificial flaw, in millimetres, for flawed cylinder burst test and flawed cylinder cycle test (see Figure 5)

R_{eg} minimum guaranteed value of the yield strength (see 7.1.1), in megapascals, for the finished cylinder

R_{ea} actual value of the yield strength, in megapascals, as determined by the tensile test (see 10.2)

R_{mg} minimum guaranteed value of the tensile strength, in megapascals, for the finished cylinder

R_{ma} actual value of tensile strength, in megapascals, as determined by the tensile test (see 10.2)

$R_{ma,\,max}$ maximum actual value of the tensile strength range, in megapascals

$R_{ma,\,min}$ minimum actual value of the tensile strength range, in megapascals

S_o original cross-sectional area of tensile test piece, in square millimetres, in accordance with ISO 6892-1

t actual thickness of the test specimen, in millimetres

t_m average cylinder wall thickness at position of testing during the flattening test, in millimetres

V water capacity of cylinder, in litres

w width, in millimetres, of the tensile test piece (see Figure 8)

5 Inspection and testing

Assessment of conformity to this international standard shall take into account the applicable regulations of the countries of use.

To ensure that cylinders conform to this document, they shall be subject to inspection and testing in accordance with Clauses 9, 10 and 11.

Tests and examinations performed to demonstrate compliance with this document shall be conducted using instruments calibrated before being put into service and thereafter according to an established programme.

6 Materials

6.1 General requirements

6.1.1 Materials for the manufacture of gas cylinders shall fall within one of the following categories:

a) internationally recognized cylinder steels;

b) nationally recognized cylinder steels;

c) new cylinder steels resulting from technical progress.

For all categories, the relevant conditions specified in 6.2 and 6.3 shall be satisfied.

6.1.2 The material used for the manufacture of gas cylinders shall be steel, other than rimming quality, with non-ageing properties and shall be fully killed with aluminium and/or silicon.

In cases where examination of this non-ageing property is required by the customer, the criteria by which it is to be specified should be agreed with the customer and inserted in the order.

© ISO 2019 – All rights reserved
Documents
Document Sharing Hub
Full document details: BS EN ISO 9809-2:2019

6.1.3 The cylinder manufacturer shall establish means to identify the cylinders with the cast of steel from which they are made.

6.1.4 High strength cylinders made in accordance with this document are normally not compatible with corrosive or embrittling gases (see ISO 11114-1). They may nevertheless be used with these gases provided that their compatibility is proven by a recognized test method, e.g. ISO 11114-4.

6.1.5 Wherever continuously cast billet material is used, the manufacturer shall ensure that there are no deleterious imperfections (porosity) in the material to be used for making cylinders (see 9.2.6).

6.2 Controls on chemical composition

6.2.1 The chemical composition of all steels shall be defined at least by:

— the carbon, manganese and silicon contents in all cases;

— the chromium, nickel and molybdenum contents or other alloying elements intentionally added to the steel;

— the maximum sulfur and phosphorus contents in all cases.

The carbon, manganese and silicon contents and, where appropriate, the chromium, nickel and molybdenum contents shall be given, with tolerances, such that the differences between the maximum and minimum values of the cast do not exceed the values shown in Table 1.

Table 1 — Chemical composition tolerances

Element	Maximum content (mass fraction) %	Permissible range (mass fraction) %	Check analysis Deviation from the limits specified for the cast analyses (mass fraction) %
Carbon	<0,30	0,03	±0,02
	≥0,30	0,04	
Manganese	All values	0,20	≤1,00 ± 0,04 >1,00 ≤ 1,70 ± 0,05
Silicon	All values	0,15	±0,03
Chromium	<1,20	0,20	≤2,00 ± 0,05
	≥1,20	0,30	>2,00 ≤ 2,20 ± 0,10
Nickel	All values	0,30	≤2,00 ± 0,05 >2,00 ≤ 4,30 ± 0,07
Molybdenum	<0,50	0,10	≤0,30 ± 0,03
	≥0,50	0,15	>0,30 ≤ 0,60 ± 0,04

The combined content of the following elements: vanadium, niobium, titanium, boron and zirconium, shall not exceed 0,15 %.

The actual content of any element deliberately added shall be reported and their maximum content shall be representative of good steel making practice.

© ISO 2019 – All rights reserved

Documents
Document Sharing Hub
Full document details: BS EN ISO 9809-2:2019

6.2.2 Sulfur and phosphorus in the cast analysis of material used for the manufacture of gas cylinders shall not exceed the values shown in Table 2.

Table 2 — Maximum sulfur and phosphorus limits in % (mass fraction)

Sulfur	0,005
Phosphorus	0,015

6.2.3 The cylinder manufacturer shall obtain and provide certificates of cast (heat) analyses of the steels supplied for the construction of gas cylinders.

Should check analyses be required, they shall be carried out either on specimens taken during manufacture from the material in the form as supplied by the steel maker to the cylinder manufacturer or from finished cylinders. In any check analysis, the maximum permissible deviation from the limits specified for the cast analyses shall conform to the values specified in Table 1.

6.3 Heat treatment

6.3.1 The cylinder manufacturer shall certify the heat treatment process applied to the finished cylinders.

6.3.2 Quenching in media other than mineral oil is permissible, provided that:

— the method produces cylinders free of cracks;

— the manufacturer ensures that the rate of cooling does not produce any cracks in the cylinder;

— every production cylinder is subjected to a method of non-destructive testing to prove freedom from cracks, if the average rate of cooling in the medium is greater than 80 % of that in water at 20 °C without additives;

— during the production of cylinders, the concentration of the quenchant is checked and recorded during every shift to ensure that the limits are maintained. Further documented checks shall be carried out to ensure that the chemical properties of the quenchant are not degraded.

6.3.3 The tempering process shall achieve the required mechanical properties.

The actual temperature to which a type of steel is subjected for a given tensile strength shall not deviate by more than+/− 30 °C from the temperature specified by the cylinder manufacturer.

6.4 Failure to meet test requirements

In the event of failure to meet the test requirements, retesting or reheat treatment and retesting shall be carried out as follows to the satisfaction of the inspector.

a) If there is evidence of a fault in carrying out a test, or an error of measurement, a further test shall be performed. If the result of this test is satisfactory, the first test shall be ignored.

b) If the test has been carried out in a satisfactory manner, the cause of test failure shall be identified.

   1) If the failure is considered to be due to the heat treatment applied, the manufacturer may subject all the cylinders implicated by the failure to only one further heat treatment, e.g. if the failure is in a test representing the prototype or batch cylinders. Test failure shall require reheat treatment of all the represented cylinders prior to retesting.

      This reheat treatment shall consist of re-tempering or re-quenching and tempering.

      Whenever cylinders are reheat treated, the minimum guaranteed wall thickness shall be maintained.

© ISO 2019 – All rights reserved
Documents
Document Sharing Hub
Full document details: BS EN ISO 9809-2:2019

Only the relevant prototype or batch tests needed to prove the acceptability of the new batch shall be performed again. If one or more tests prove even partially unsatisfactory, all cylinders of the batch shall be rejected.

2) If the failure is due to a cause other than the heat treatment applied, all cylinders with imperfections shall be either rejected or repaired such that the repaired cylinders pass the test(s) required for the repair. They shall then be re-instated as part of the original batch.

7 Design

7.1 General requirements

7.1.1 The calculation of the wall thickness of the pressure-containing parts shall be related to the guaranteed minimum yield strength, R_{eg}, of the material in the finished cylinder.

7.1.2 Cylinders shall be designed with one or two openings along the central cylinder axis only.

7.1.3 For calculation purposes, the value of R_{eg} shall not exceed 0,90 R_{mg}.

7.1.4 The internal pressure upon which the calculation of wall thickness is based shall be the hydraulic test pressure p_h.

7.2 Limitation on tensile strength

The maximum value of the tensile strength is limited by the ability of the steel to meet the requirements of Clauses 9 and 10. The maximum range of tensile strength shall be 120 MPa (i.e. $R_{ma,\,max} - R_{ma,\,min} \leq 120$ MPa).

However, the actual value of the tensile strength as determined in 10.2 shall not exceed 1 300 MPa for cylinders with an outside diameter greater than 140 mm, and 1 400 MPa for cylinders with an outside diameter equal to or less than 140 mm.

7.3 Design of cylindrical shell thickness

The guaranteed minimum thickness of the cylindrical shell, a', shall not be less than the thickness calculated using Formulae (1) and (2), and additionally condition (3) shall be satisfied:

$$a = \frac{D}{2}\left(1 - \sqrt{\frac{10\,FR_{eg} - \sqrt{3}p_h}{10\,FR_{eg}}}\right) \tag{1}$$

where the value of F is the lesser of $\dfrac{0{,}65}{R_{eg}/R_{mg}}$ or 0,77.

R_{eg}/R_{mg} shall not exceed 0,90.

The wall thickness shall also satisfy Formula (2):

$$a \geq \frac{D}{250} + 1 \tag{2}$$

with an absolute minimum of a = 1,5 mm.

© ISO 2019 – All rights reserved

Documents
Document Sharing Hub
Full document details: BS EN ISO 9809-2:2019

The burst ratio shall be satisfied by test as given in Formula (3):

$$p_b / p_h \geq 1{,}6 \quad (3)$$

NOTE 1 If the result of these requirements is a guaranteed thickness of the cylindrical shell $a' \geq 12$ mm for diameter $D \geq 140$ mm, or a guaranteed thickness of the cylindrical shell, $a' \geq 6$ mm for diameter $D \leq 140$ mm, such a design is outside the scope of this document (see Clause 1).

NOTE 2 It is generally assumed that p_h = 1,5 times working pressure for compressed gases for cylinders designed and manufactured to this document.

NOTE 3 For some applications such as tubes assembled in batteries to equip trailers or skids (ISO modules) or MEGCs for the transportation and distribution of gases, it is important that stresses associated with mounting the tube (e.g. bending stresses, see Annex E, torsional stresses, dynamic loadings) are considered by the assembly manufacturer and the tube manufacturer.

NOTE 4 In addition, during hydraulic pressure testing, tubes could be supported or lifted by their necks; therefore, potential bending stresses are considered. For general guidance, see Annex E.

7.4 Design of convex ends (heads and bases)

7.4.1 When convex base ends (see Figure 1) are used, the thickness, b, at the centre of a convex end shall be not less than that required by the following criteria:

where the inside knuckle radius, r, is not less than 0,075D, then

$b \geq 1{,}5\ a$ for $0{,}40 > H/D \geq 0{,}20$;

$b \geq a$ for $H/D \geq 0{,}40$.

To obtain a satisfactory stress distribution in the region where the end joins the shell, any thickening of the end when required shall be gradual from the point of juncture, particularly at the base. For the application of this rule, the point of juncture between the shell and the end is defined by the horizontal lines indicating dimension H in Figure 1.

7.4.2 The cylinder manufacturer shall prove by the pressure cycling test detailed in 9.2.3 that the design is satisfactory.

The shapes shown in Figure 1 are typical of convex heads and base ends. Shapes a), c) and d) are base ends and shape b) is a head.

7.5 Design of concave base ends

When concave base ends (see Figure 2) are used, the following design values are recommended:

$a_1 \geq 2a$

$a_2 \geq 2a$

$h \geq 0{,}12D$

$r \geq 0{,}075D$

The design drawing shall at least show values for a_1, a_2, h and r.

© ISO 2019 – All rights reserved
Documents
Document Sharing Hub
Full document details: BS EN ISO 9809-2:2019

To obtain a satisfactory stress distribution, the thickness of the cylinder shall increase progressively in the transition region between the cylindrical part and the base.

The cylinder manufacturer shall in any case prove by the pressure cycling test detailed in 9.2.3 that the design is satisfactory.

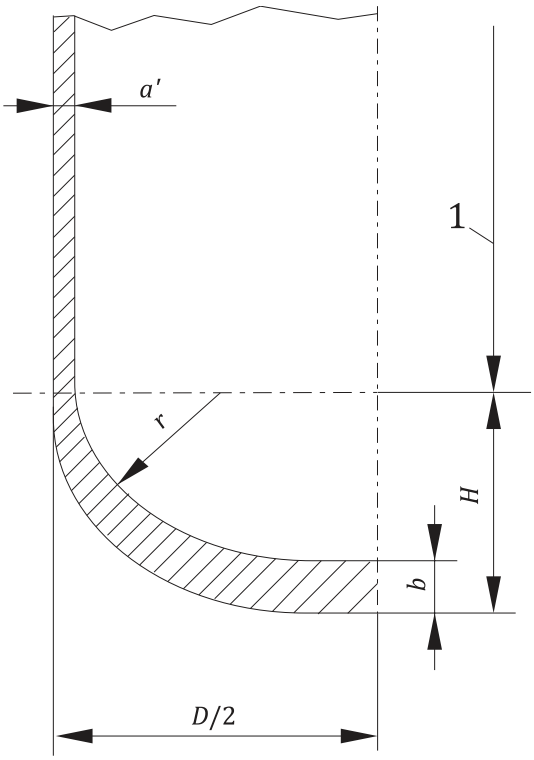

a)

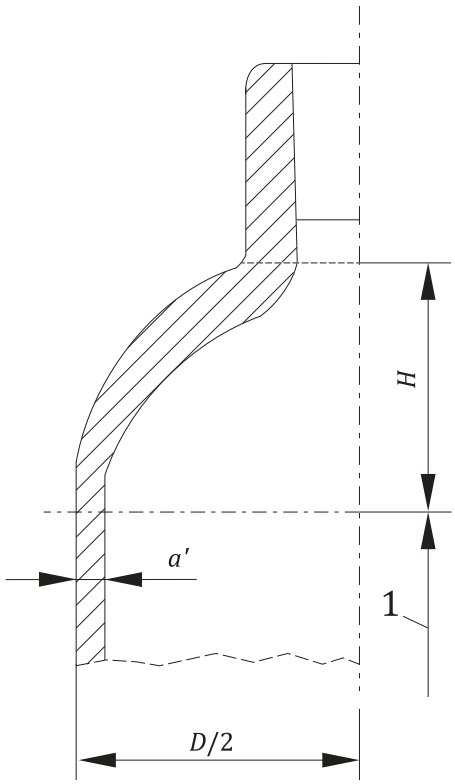

b)

© ISO 2019 – All rights reserved

Documents
Document Sharing Hub
Full document details: BS EN ISO 9809-2:2019

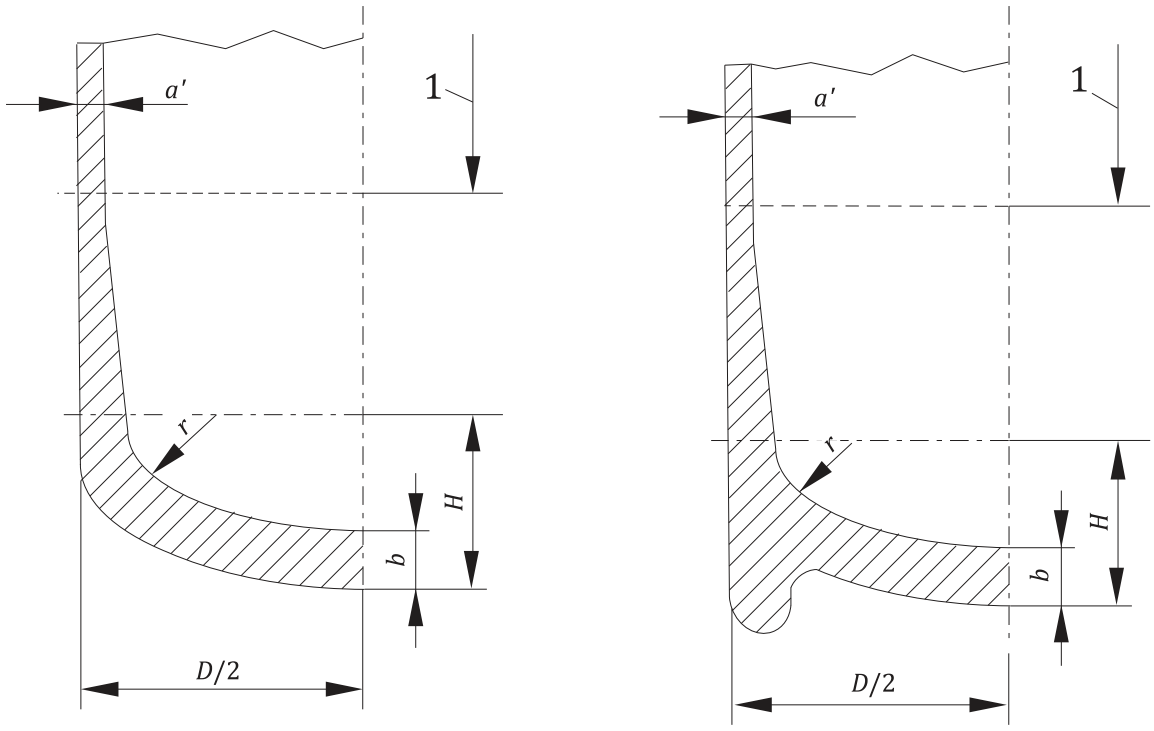

c) d)

Key

1 cylindrical part

Figure 1 — Typical convex ends

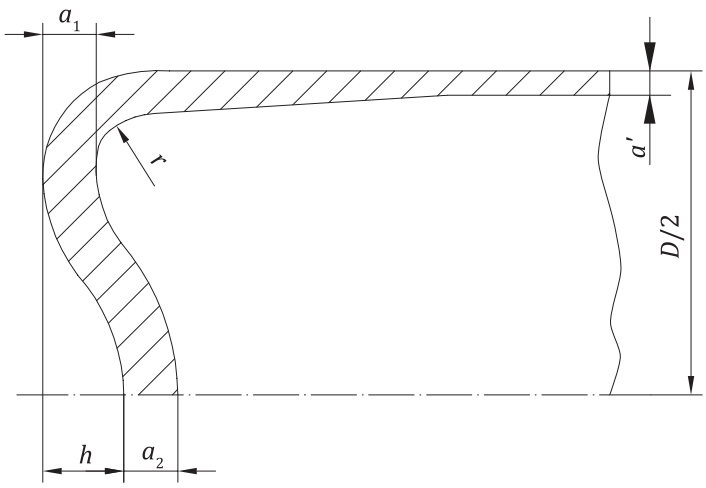

Figure 2 — Concave base end

7.6 Neck design

7.6.1 The external diameter and thickness of the formed neck end of the cylinder shall be adequate for the torque applied in fitting the valve to the cylinder. The torque may vary according to the valve/fitting type (e.g. plugs), diameter of thread, the form of thread and the sealant used in the fitting of the valve.

© ISO 2019 – All rights reserved
Documents
Document Sharing Hub
Full document details: BS EN ISO 9809-2:2019