BS EN ISO/ASTM 52902:2019

BSI Standards Publication

Additive manufacturing - Test artifacts - Geometric capability assessment of additive manufacturing systems

Documents
Document Sharing Hub

Full document details: BS EN ISO/ASTM 52902:2019

National foreword

This British Standard is the UK implementation of EN ISO/ASTM 52902:2019. It is identical to ISO/ASTM 52902:2019.

The UK participation in its preparation was entrusted to Technical Committee AMT/8, Additive manufacturing.

A list of organizations represented on this committee can be obtained on request to its secretary.

This publication does not purport to include all the necessary provisions of a contract. Users are responsible for its correct application.

© The British Standards Institution 2019
Published by BSI Standards Limited 2019

ISBN 978 0 580 99567 5

ICS 25.030

Compliance with a British Standard cannot confer immunity from legal obligations.

This British Standard was published under the authority of the Standards Policy and Strategy Committee on 30 September 2019.

Amendments/corrigenda issued since publication

Date	Text affected

Documents
Document Sharing Hub

Full document details: BS EN ISO/ASTM 52902:2019

EUROPEAN STANDARD

NORME EUROPÉENNE

EUROPÄISCHE NORM

EN ISO/ASTM 52902

September 2019

ICS 25.030

English Version

Additive manufacturing - Test artifacts - Geometric capability assessment of additive manufacturing systems (ISO/ASTM 52902:2019)

Fabrication additive - Pièces types d'essai - Évaluation de la capacité géométrique des systèmes de fabrication additive (ISO/ASTM 52902:2019)

Additive Fertigung - Testkörper - Allgemeine Leitlinie für die Bewertung der geometrischen Leistung additiver Fertigungssysteme (AM-Systeme) (ISO/ASTM 52902:2019)

This European Standard was approved by CEN on 7 July 2019.

CEN members are bound to comply with the CEN/CENELEC Internal Regulations which stipulate the conditions for giving this European Standard the status of a national standard without any alteration. Up-to-date lists and bibliographical references concerning such national standards may be obtained on application to the CEN-CENELEC Management Centre or to any CEN member.

This European Standard exists in three official versions (English, French, German). A version in any other language made by translation under the responsibility of a CEN member into its own language and notified to the CEN-CENELEC Management Centre has the same status as the official versions.

CEN members are the national standards bodies of Austria, Belgium, Bulgaria, Croatia, Cyprus, Czech Republic, Denmark, Estonia, Finland, France, Germany, Greece, Hungary, Iceland, Ireland, Italy, Latvia, Lithuania, Luxembourg, Malta, Netherlands, Norway, Poland, Portugal, Republic of North Macedonia, Romania, Serbia, Slovakia, Slovenia, Spain, Sweden, Switzerland, Turkey and United Kingdom.

EUROPEAN COMMITTEE FOR STANDARDIZATION
COMITÉ EUROPÉEN DE NORMALISATION
EUROPÄISCHES KOMITEE FÜR NORMUNG

CEN-CENELEC Management Centre: Rue de la Science 23, B-1040 Brussels

© 2019 CEN All rights of exploitation in any form and by any means reserved worldwide for CEN national Members.

Ref. No. EN ISO/ASTM 52902:2019 E

Documents
Document Sharing Hub

Full document details: BS EN ISO/ASTM 52902:2019

European foreword

This document (EN ISO/ASTM 52902:2019) has been prepared by Technical Committee ISO/TC 261 "Additive manufacturing" in collaboration with Technical Committee CEN/TC 438 “Additive Manufacturing” the secretariat of which is held by AFNOR.

This European Standard shall be given the status of a national standard, either by publication of an identical text or by endorsement, at the latest by March 2020, and conflicting national standards shall be withdrawn at the latest by March 2020.

Attention is drawn to the possibility that some of the elements of this document may be the subject of patent rights. CEN shall not be held responsible for identifying any or all such patent rights.

According to the CEN-CENELEC Internal Regulations, the national standards organizations of the following countries are bound to implement this European Standard: Austria, Belgium, Bulgaria, Croatia, Cyprus, Czech Republic, Denmark, Estonia, Finland, France, Germany, Greece, Hungary, Iceland, Ireland, Italy, Latvia, Lithuania, Luxembourg, Malta, Netherlands, Norway, Poland, Portugal, Republic of North Macedonia, Romania, Serbia, Slovakia, Slovenia, Spain, Sweden, Switzerland, Turkey and the United Kingdom.

Endorsement notice

The text of ISO/ASTM 52902:2019 has been approved by CEN as EN ISO/ASTM 52902:2019 without any modification.

Documents
Document Sharing Hub

Full document details: BS EN ISO/ASTM 52902:2019

Contents

Page

Foreword ..... **v**

1 Scope **1**

2 Normative references **1**

3 Terms and definitions **1**

4 Significance and use **2**
4.1 General 2
4.2 Comparing results from one machine 2

5 General principles for producing artifacts **2**
5.1 General 2
5.2 Need to use feedstock conforming to a material specification 2
5.3 Need to undertake artifact building according to a documented process specification 2
5.4 File formats and preparation 3
5.5 Download files 3
5.6 Discussion of file conversion 3
5.7 AMF preferred (with conversion instructions/ resolutions) 3
5.8 Need for test specification and test process 3
5.9 Quantity of test artifacts 3
5.10 Position and orientation of test artifacts 4
5.11 Considerations for orientation 4
5.12 Labelling 4
5.13 Coverage 4
5.14 Arrays 4
5.15 Part consolidation 4
5.16 Supports and post processing 5

6 General principles for measuring artifacts **5**
6.1 General 5
6.2 Measure parts as built 5
6.3 Measurement strategy 5
6.4 Measurement uncertainty 6

7 Artifact geometries **6**
7.1 General 6
7.2 Accuracy 6
7.2.1 Linear artifact 6
7.2.2 Circular artifact 8
7.3 Resolution 10
7.3.1 Resolution pins 10
7.3.2 Resolution holes 11
7.3.3 Resolution rib 13
7.3.4 Resolution slot 15
7.4 Surface texture 17
7.4.1 Purpose 17
7.4.2 Geometry 17
7.4.3 Measurement 18
7.4.4 Reporting 19
7.4.5 Considerations 19
7.5 Labelling 20
7.5.1 Purpose 20
7.5.2 Geometry 20
7.5.3 Considerations 21

Annex A (informative) **Example artifact configurations** **22**

Annex B (informative) **Measurement techniques** **25**

AVA Documents
Document Sharing Hub

© ISO/ASTM International 2019 – All rights reserved

Full document details: BS EN ISO/ASTM 52902:2019

Annex C (informative) **Measurement procedures** **28**
Annex D (informative) **List of specimen names and sizes** **34**
Bibliography **36**

© ISO/ASTM International 2019 – All rights reserved
Documents
Document Sharing Hub
Full document details: BS EN ISO/ASTM 52902:2019

Foreword

ISO (the International Organization for Standardization) is a worldwide federation of national standards bodies (ISO member bodies). The work of preparing International Standards is normally carried out through ISO technical committees. Each member body interested in a subject for which a technical committee has been established has the right to be represented on that committee. International organizations, governmental and non-governmental, in liaison with ISO, also take part in the work. ISO collaborates closely with the International Electrotechnical Commission (IEC) on all matters of electrotechnical standardization.

The procedures used to develop this document and those intended for its further maintenance are described in the ISO/IEC Directives, Part 1. In particular the different approval criteria needed for the different types of ISO documents should be noted. This document was drafted in accordance with the editorial rules of the ISO/IEC Directives, Part 2 (see www.iso.org/directives).

Attention is drawn to the possibility that some of the elements of this document may be the subject of patent rights. ISO shall not be held responsible for identifying any or all such patent rights. Details of any patent rights identified during the development of the document will be in the Introduction and/or on the ISO list of patent declarations received (see www.iso.org/patents).

Any trade name used in this document is information given for the convenience of users and does not constitute an endorsement.

For an explanation of the voluntary nature of standards, the meaning of ISO specific terms and expressions related to conformity assessment, as well as information about ISO's adherence to the World Trade Organization (WTO) principles in the Technical Barriers to Trade (TBT) see www.iso.org/iso/foreword.html.

This document was prepared by ISO/TC 261, *Additive manufacturing*, in cooperation with ASTM Committee F42, *Additive Manufacturing Technologies*, on the basis of a partnership agreement between ISO and ASTM International with the aim to create a common set of ISO/ASTM standards on additive manufacturing.

Any feedback or questions on this document should be directed to the user's national standards body. A complete listing of these bodies can be found at www.iso.org/members.html.

© ISO/ASTM International 2019 – All rights reserved

Documents
Document Sharing Hub
Full document details: BS EN ISO/ASTM 52902:2019

Additive manufacturing — Test artifacts — Geometric capability assessment of additive manufacturing systems

1 Scope

This document covers the general description of benchmarking test piece geometries along with quantitative and qualitative measurements to be taken on the benchmarking test piece(s) to assess the performance of additive manufacturing (AM) systems.

This performance assessment can serve the following two purposes:

— AM system capability evaluation;

— AM system calibration.

The benchmarking test piece(s) is (are) primarily used to quantitatively assess the geometric performance of an AM system. This document describes a suite of test geometries, each designed to investigate one or more specific performance metrics and several example configurations of these geometries into test piece(s). It prescribes quantities and qualities of the test geometries to be measured but does not dictate specific measurement methods. Various user applications can require various grades of performance. This document discusses examples of feature configurations, as well as measurement uncertainty requirements, to demonstrate low and high grade examination and performance. This document does not discuss a specific procedure or machine settings for manufacturing a test piece, which are covered by ASTM F 2971 and other relevant process specific specifications.

2 Normative references

The following documents are referred to in the text in such a way that some or all of their content constitutes requirements of this document. For dated references, only the edition cited applies. For undated references, the latest edition of the referenced document (including any amendments) applies.

ISO/ASTM 52900, *Additive manufacturing — General principles — Fundamentals and vocabulary*

ISO/ASTM 52921, *Standard terminology for additive manufacturing — Coordinate systems and test methodologies*

ASME B46.1, *Surface Texture (Surface Roughness, Waviness and Lay)*

3 Terms and definitions

For the purposes of this document, the terms and definitions given in ISO/ASTM 52900 and ISO/ASTM 52921 apply.

ISO and IEC maintain terminological databases for use in standardization at the following addresses:

— ISO Online browsing platform: available at https://www.iso.org/obp

— IEC Electropedia: available at http://www.electropedia.org/

© ISO/ASTM International 2019 – All rights reserved

Documents
Document Sharing Hub
Full document details: BS EN ISO/ASTM 52902:2019

4 Significance and use

4.1 General

Measurements and observations described in this document are used to assess the performance of an AM system with a given system set-up and process parameters, in combination with a specific feedstock material.

The primary characterization of the AM system obtained by this document is via geometric accuracy, surface finish and minimum feature sizes of the benchmarking test piece(s).

4.2 Comparing results from one machine

The test piece(s) can be built and measured for example when the new machine is installed. The test piece(s) may be used to periodically evaluate the performance or diagnose a fault in one AM system, for example, after system maintenance or as defined by the requirements of a quality system.

The test piece(s) described in this test method may be used as a demonstration of capabilities for a contract between a buyer and seller of AM parts or AM systems.

Data from the measurements described in this document can be used to gauge the impact of new process parameters or material on the AM system performance.

Certain test geometries may be included with every build on a particular AM system to help establish performance traceability. Depending on the needs of the end user, not all test artifacts need to be built, and individual test artifacts can be built separately if required.

5 General principles for producing artifacts

5.1 General

This clause outlines principles applicable for producing all of the test artifact geometries in this document. Reporting requirements are previewed in connection with the production steps in this clause, but more details about recording and reporting can be found with the individual artifact descriptions given in Clause 7.

5.2 Need to use feedstock conforming to a material specification

In order to ensure repeatable results, the use of a quality feedstock material is needed. A feedstock material specification should be selected or determined by the end user and the feedstock used for test artifact trials should match said specification. For example, the specification may include the particulate properties (particle size, size distribution, morphology) for powder feedstock, bulk properties (such as flow) and chemical properties (such as chemical composition and level of contamination). Although the details of the material specification shall not be disclosed (unless otherwise agreed between supplier and purchaser), it should be documented by the producer and reported with a unique alphanumeric designation as specified by ASTM F2971:2013, Annex A1, element “B”. For powder-based processes, the material specification should specifically address limitations of powder re-use and percent of virgin/re-used powder.

5.3 Need to undertake artifact building according to a documented process specification

The processing of the material in the AM system should be undertaken according to a documented process specification/manufacturing plan, as specified by ASTM F2971:2013, Annex A1, element “C”. This may be a proprietary internal standard or external standard (subject to buyer/seller negotiations), but the producer should document user-definable settings and conditions surrounding the building of parts. For example, it should document the layer thickness, build strategies (e.g. scan path, tool path,

© ISO/ASTM International 2019 – All rights reserved
Documents
Document Sharing Hub
Full document details: BS EN ISO/ASTM 52902:2019

and/or scan parameters), temperatures, etc. used during the build. This process should be consistent for all test artifacts produced within one build. These recommendations can be different for each use, so the parameters in the process specification should be agreed between the vendor and end user.

5.4 File formats and preparation

The file formats used and steps of the digital file preparation including slice parameters should be included in the process specification. Care shall be taken during the creation and transfer of data files to avoid degradation of the model. Any discrepancy between these affects the outcome of tests on the artifacts and for this reason, best practice for the control of the file formats and preparation is discussed here.

5.5 Download files

The 3D digital models for standard test artifact geometries can be downloaded in *.step format at https://standards.iso.org/iso/52902/ed-1/en. For a complete list of available files, please see Annex D.

5.6 Discussion of file conversion

When a CAD model is converted to AMF, STL (or any intermediate file format), sufficient fidelity shall be maintained to ensure that the test artifact produced from it fairly reflects the capabilities of the AM system under assessment. The file conversion tolerance selected should ensure that the maximum deviation of the data from the nominal CAD model is less than one quarter and, based on good measurement practice, ideally less than one tenth of the expected accuracy of the AM system being assessed. Currently, most additive manufacturing equipment cannot produce features with a resolution better than 10 µm, therefore CAD models are saved to STL/AMF ensuring at least a 2,5 µm accuracy or better. This is only general guidance and should be confirmed for the specific output system. It is recommended that users check the maximum deviation and record the conversion parameters used, as well as any maximum deviation (chord height and angular tolerance).

Files should not be scaled up or down either during conversion or afterward. Machine correction factors (e.g. offsets, axis scaling, etc.) may be used and should be documented as part of the process specification.

5.7 AMF preferred (with conversion instructions/ resolutions)

The AMF file format as defined by ISO/ASTM 52915 is the preferred model format for test artifact geometry representation due to its ability to store high fidelity geometry with embedded units in an intermediate file format.

5.8 Need for test specification and test process

This document forms the basis for the general *Test Plan/Specification* described in ASTM F2971:2013, Annex A1, element “D”, but specifics about its implementation need recording to accurately document the *Test Process* (element “E” in Annex A1), used for producing the parts as discussed in Clause 6.

5.9 Quantity of test artifacts

For a complete test of machine performance, two things dictate the quantity of the test artifacts produced. First, the Test Specification/Test Process shall ensure a quantity of samples, typically no less than five, so that statistically significant measurements can be made. Second, sufficient coverage (see 5.5) of the build platform needs to be made to account for variations in performance between build locations. Fewer test artifacts with less complete coverage may be used for spot checks or limited demonstrations, such as the example detailed in Annex A. The number of artifacts shall be agreed upon between the buyer and seller and shall permit to perform at least 5 mesurements.

© ISO/ASTM International 2019 – All rights reserved

Documents
Document Sharing Hub
Full document details: BS EN ISO/ASTM 52902:2019

5.10 Position and orientation of test artifacts

As per ASTM F2971:2013, Annex A1, element "F", it is recommended to report results in combination with the test artifacts' build position and orientations according to the convention set forth in ISO/ASTM 52921.

5.11 Considerations for orientation

Since these test artifacts are intended to reveal the strengths and weaknesses of additive building techniques, there will be failed build geometries. It is worth considering which features are likely to fail and place them in a position that minimizes the risk that this leads to an outright failure of the features/parts/artifacts in the rest of the build. For example, in a powder bed process, it can be advisable to position parts that are more likely to fail at a higher level in the overall build to reduce the risk that failed parts or sections of parts impinge on other components in the build or the AM machine mechanism.

5.12 Labelling

It can be useful to add labels to parts in order to identify respective artifact orientations and positions in the build. Labelling is summarised in 7.4.

5.13 Coverage

It is important that test artifacts be made with sufficient coverage of the build volume to get representative data for where real parts are made. Coverage evaluates variability throughout the build volume. This is best practice for all AM processes and is especially critical for processes that have a "sweet spot" (for example, some galvanometric laser beam steering systems give more repeatable results in the centre of the platform). The artifact distribution should span at least 80 % of the machine's build platform area. If build location effects are known or deemed irrelevant for the particular trial being performed, then a single build location may be selected and used, as agreed between vendor and user.

Long artifacts, which reach across the extents of the build, are necessary to detect corrections that are not linear or are periodic in nature.

5.14 Arrays

Geometry should not be scaled (since this affects the measurement outputs) but may be patterned in an array to give larger coverage areas. See an example in Figure 2.

5.15 Part consolidation

When arrays of parts are needed for better coverage, it can be most practical to build a single combined part instead of trying to build arrays of adjacent individual parts. This can be achieved by consolidating adjacent AMF or STL files prior to slicing and other file preparation steps.

As AM most commonly is a layered process (in z-direction) and often based on pixels (in x/y-direction), the exact position of the part in the build can affect the test significantly. This is especially true of artifacts testing machine resolution. A minor translation of the part can influence rounding off issues influencing whether a specific layer or pixel will build or not. This can be caused during preparation of the slice file and during orienting the slice file in to the working area in the machine. Results should be reported in combination with the test artifacts' build orientations according to the convention set forth in ISO/ASTM 52921.

With certain AM processes (especially with metals), heat build-up from processing large cross sectional areas near the test artifacts can affect their geometrical accuracy. Therefore, it is advised that the manufacturer ensure compliance with specified distances.

© ISO/ASTM International 2019 – All rights reserved
Documents
Document Sharing Hub
Full document details: BS EN ISO/ASTM 52902:2019

5.16 Supports and post processing

Where possible, supports should be avoided or supports which do not impede or affect in any way the intended measurement should be employed. Supporting strategy, including, but not limited to material, geometry, removal technique, etc., shall be fully documented in the process specification.

Data reported from this document shall be in the as-built condition prior to any surface or downstream processing. In the case of unavoidable post-processing undertaken prior to measurement (e.g. removal of necessary support material), details of the process should be reported as part of the process specification. The reporting should include a description of any abrasive media and how it was applied to the surface of the artifacts. In addition, data after additional post-processing treatments (such as sand blasting of metal parts for example) may be obtained but only if clearly noted and presented together with as-built measurements.

6 General principles for measuring artifacts

6.1 General

This clause outlines principles applicable for measuring all of the test artifact geometries in this document. The specific measurements are specified in Clause 7 describing the individual artifact geometries. This document does not prescribe any specific measurement methods; the measurements described below can be accomplished by a variety of techniques and devices (e.g. coordinate measuring machine, optical scanner, dial indicators with calibrated motion devices, surface profilometers, etc.). ISO 17296-3 can be used to improve communication between stakeholders concerning test methods. Reporting requirements are previewed in connection with the measurement steps in this clause but more details about recording and reporting can be found in Annexes B and C.

6.2 Measure parts as built

The test artifact should be allowed to cool to room temperature and then measured directly after it is removed from the system used to build it, before any post-processing is performed. The end user may require that parts be held at a set temperature and humidity prior to measurement. If the parts are built by a powder bed based process, the parts should be completely separated from the surrounding powder before measurement. If the parts are built on a build platform, perform the measurements without removing the part from the platform. (Removal from a build platform can affect the shapes of the artifacts, thereby influencing the results. If measurement is not possible on the platform, this shall be explicitly stated in the report.) If post-processing is desired, report all details of each post-processing step and measure the part before and after each post-processing steps (reporting all measurement results).

6.3 Measurement strategy

It is well known that measurement strategy affects the overall measurement uncertainty; this is true for dimensional measurements and surface measurements alike. Measurement strategy, here, involves the device chosen to perform the measurement along with the number of points selected to represent the feature or surface and the distribution of points along the feature or surface. For roughness measurements, the measurement strategy includes any applied filters (e.g. the cut-off length). Measurement strategy is a complicated subject and is often very specific to the part or feature being measured. As such, there is no general “best practice” for performing these measurements. However, some tips are provided in Annexes B and C. The measurement uncertainty is ultimately the important concept, and, with consideration given to the available measurement devices, using a measurement strategy that minimizes the measurement uncertainty within any given constraints should be the primary focus.

Nominally “flat” surfaces may be very uneven or rough. Multiple points sometimes need to be measured to obtain a mean result.

© ISO/ASTM International 2019 – All rights reserved

Documents
Document Sharing Hub
Full document details: BS EN ISO/ASTM 52902:2019

6.4 Measurement uncertainty

The standard uncertainty of each measurement should be reported along with the measurement. Guidance on determining measurement uncertainty can be found in the following references:

— ASME B89.7.3.2 for uncertainty in dimensional measurements;

— ASME B46.1 for surface texture measurements;

— JCGM 100 and JCGM 101 for measurement uncertainty in general;

— ISO/IEC Guide 98-1 and related documents.

Users should document any calibration and/or quality maintenance system for the measurement processes and equipment used. Measurement device and resolution shall be disclosed in the report.

7 Artifact geometries

7.1 General

Seven types of artifacts are described in the following subclauses. Each artifact is intended to test a different aspect of a system's performance or capability.

7.2 Accuracy

7.2.1 Linear artifact

7.2.1.1 Purpose

This artifact tests the linear positioning accuracy along a specific machine direction. Depending on artifact orientation and machine configuration, errors in the artifact may provide a basis for positioning compensation or diagnosing specific error motions in the system's positioning system.

7.2.1.2 Geometry

Figure 1 depicts the geometry of the linear artifact. The artifact is comprised of prismatic protrusions atop a rectangular solid base. A bounding box for the entire feature is 55 mm × 5 mm × 8 mm. The end protrusions are 2,5 mm × 5 mm × 5 mm. The central protrusions are 5 mm cubes. Spacing of the protrusions increases along the length of the artifact from 5 mm to 7,5 mm, 10 mm, and 12,5 mm.

Dimensions in mm

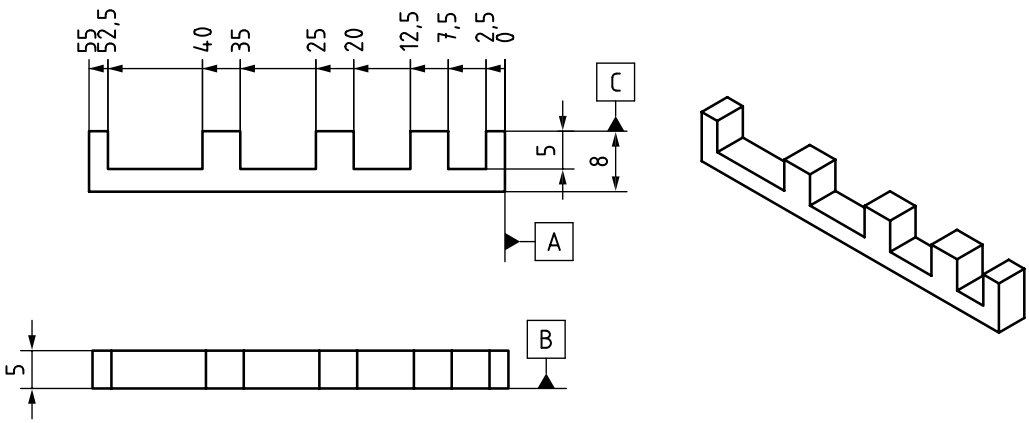

Figure 1 — Engineering drawing of linear test artifacts

© ISO/ASTM International 2019 – All rights reserved
Documents
Document Sharing Hub
Full document details: BS EN ISO/ASTM 52902:2019

If a longer test of linear accuracy is desired, multiple linear artifacts can be appended to one another. The 2,5 mm length of the end protrusions means that when two or more linear artifacts are appended, the central protrusions will all be 5 mm cubes. Figure 2 shows an example. If this option is chosen, see 5.14.

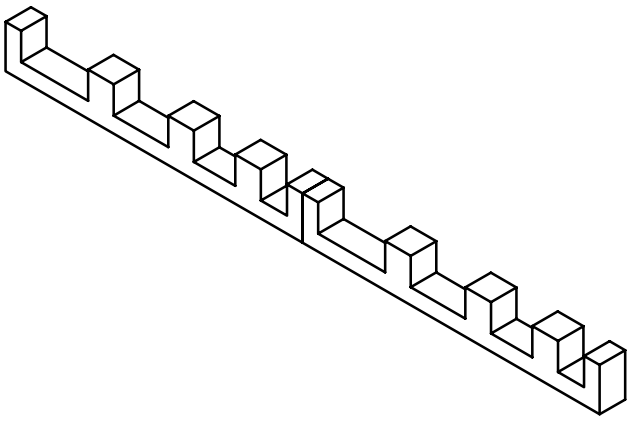

Figure 2 — Two linear accuracy test artifacts appended to each other

If a shorter test of linear accuracy is required, the geometry of an alternative test artifact shall be agreed upon by the user and supplier, and shall follow similar design principles to the part shown in Figure 1. The alternative artifact should have non-equally spaced features and should test both protrusions and gaps (i.e. distances with material in between datum features and distances with space in between datum features).

7.2.1.3 Measurement

The primary measurement for the linear artifact is the positions of the cube faces relative to the primary datum at the end of the artifact (see Figure 1). Alternatively, the lengths of each protrusion can be measured and the spacing between each protrusion can be measured. Optional measurements available are the straightness of the base along the length of the artifact, parallelism of each side of the base along the length of the artifact and the heights of each protrusion.

7.2.1.4 Considerations

Default orientations for a thorough overview of linear accuracy should include at least one test artifact aligned parallel to each axis (x, y, and z) in the machine coordinate system. When this is done, orthogonal orientation notation should be used to document the orientation as per ISO/ASTM 52921. An alternative may be to align one linear artifact with the motion of one of the machine's positioning axes (for example the x-axis slide in a gantry system). This alternative orientation may better link errors in the part with error motions in the positioning system.

Orientations that can cause collision or damage from a wiper or recoating blade should be avoided.

It is often desirable to test linear accuracy through the extent of the machine's positioning capabilities. Users should consider positioning linear artifacts through the middle of the build area as well as near the ends of travel.

In the case of a vertically oriented linear artifact, the use of support structures should be avoided if possible. If support structures are necessary (for example beneath the protrusions), the support strategy (including geometry, material and removal technique) shall be fully documented. Care should be taken to select a support strategy that minimizes the adverse impact on the measuring process/accuracy.

© ISO/ASTM International 2019 – All rights reserved

Documents
Document Sharing Hub
Full document details: BS EN ISO/ASTM 52902:2019