BS HD 60364-8-2:2011+A11:2019

BSI Standards Publication

Low-voltage electrical installations

Part 8-2: Prosumer's low-voltage electrical installations

Documents
Document Sharing Hub

Full document details: BS HD 60364-8-2:2011+A11:2019

National foreword

This British Standard is the UK implementation of HD 60364-8-2:2018+A11:2019. It is derived from IEC 60364-8-2:2018. It supersedes BS HD 60364-8-2:2018, which is withdrawn.

The UK participation in its preparation was entrusted to Technical Committee JPEL/64, Electrical Installations of Buildings - Joint Committee.

A list of organizations represented on this committee can be obtained on request to its secretary.

This publication does not purport to include all the necessary provisions of a contract. Users are responsible for its correct application.

© The British Standards Institution 2019
Published by BSI Standards Limited 2019

ISBN 978 0 539 06082 9

ICS 91.140.50

Compliance with a British Standard cannot confer immunity from legal obligations.

This British Standard was published under the authority of the Standards Policy and Strategy Committee on 31 January 2019.

Amendments/corrigenda issued since publication

Date	Text affected
31 August 2019	Implementation of CENELEC amendment A11:2019: Annex ZA replaced, Annex ZB added and notes added to Bibliography

Documents
Document Sharing Hub

Full document details: BS HD 60364-8-2:2011+A11:2019

HARMONIZATION DOCUMENT

DOCUMENT D'HARMONISATION

HARMONISIERUNGSDOKUMENT

HD 60364-8-2:2018+A11

August 2019

ICS 91.140.50

English Version

Low-voltage electrical installations - Part 8-2: Prosumer's low-voltage electrical installations (IEC 60364-8-2:2018)

Installations électriques à basse tension - Partie 8-2: Installations électriques à basse tension du prosommateur (IEC 60364-8-2:2018)

Errichten von Niederspannungsanlagen - Teil 8-2: Kombinierte Erzeugungs-/Verbrauchsanlagen (IEC 60364-8-2:2018)

This Harmonization Document was approved by CENELEC on 2018-11-14. CENELEC members are bound to comply with the CEN/CENELEC Internal Regulations which stipulate the conditions for implementation of this Harmonization Document at national level.

Up-to-date lists and bibliographical references concerning such national implementations may be obtained on application to the CEN-CENELEC Management Centre or to any CENELEC member.

This Harmonization Document exists in three official versions (English, French, German).

CENELEC members are the national electrotechnical committees of Austria, Belgium, Bulgaria, Croatia, Cyprus, the Czech Republic, Denmark, Estonia, Finland, Former Yugoslav Republic of Macedonia, France, Germany, Greece, Hungary, Iceland, Ireland, Italy, Latvia, Lithuania, Luxembourg, Malta, the Netherlands, Norway, Poland, Portugal, Romania, Serbia, Slovakia, Slovenia, Spain, Sweden, Switzerland, Turkey and the United Kingdom.

European Committee for Electrotechnical Standardization
Comité Européen de Normalisation Electrotechnique
Europäisches Komitee für Elektrotechnische Normung

CEN-CENELEC Management Centre: Rue de la Science 23, B-1040 Brussels

© 2018 CENELEC All rights of exploitation in any form and by any means reserved worldwide for CENELEC Members.

Ref. No. HD 60364-8-2:2018 E

Documents
Document Sharing Hub

Full document details: BS HD 60364-8-2:2011+A11:2019

European foreword

The text of document 64/2298/FDIS, future edition 1 of IEC 60364-8-2, prepared by IEC/TC 64 "Electrical installations and protection against electric shock" was submitted to the IEC-CENELEC parallel vote and approved by CENELEC as HD 60364-8-2:2018.

The following dates are fixed:

- latest date by which the document has to be implemented at national level by publication of an identical national standard or by endorsement (dop) 2019-08-14
- latest date by which the national standards conflicting with the document have to be withdrawn (dow) 2021-11-14

Attention is drawn to the possibility that some of the elements of this document may be the subject of patent rights. CENELEC shall not be held responsible for identifying any or all such patent rights.

Endorsement notice

The text of the International Standard IEC 60364-8-2:2018 was approved by CENELEC as a European Standard without any modification.

In the official version, for Bibliography, the following note has to be added for the standard indicated:

IEC 60364 (series)	NOTE	Harmonized as HD 60364 (series)
IEC 60364-5-51:2005	NOTE	Harmonized as HD 60364-5-51:2009 (modified)

Documents
Document Sharing Hub

Full document details: BS HD 60364-8-2:2011+A11:2019

Foreword to amendment A11

This document (HD 60364-8-2:2018/A11:2019) has been prepared by CLC/TC 64 "Electrical installations and protection against electric shock".

The following dates are fixed:

• latest date by which this document has to be implemented at national level by publication of an identical national standard or by endorsement	(dop)	2020-02-02
• latest date by which the national standards conflicting with this document have to be withdrawn	(dow)	2022-08-02

Attention is drawn to the possibility that some of the elements of this document may be the subject of patent rights. CENELEC shall not be held responsible for identifying any or all such patent rights.

Documents
Document Sharing Hub
Full document details: BS HD 60364-8-2:2011+A11:2019

Annex ZA
(normative)

Normative references to international publications with their corresponding European publications

The following documents are referred to in the text in such a way that some or all of their content constitutes requirements of this document. For dated references, only the edition cited applies. For undated references, the latest edition of the referenced document (including any amendments) applies.

NOTE 1 Where an International Publication has been modified by common modifications, indicated by (mod), the relevant EN/HD applies.

NOTE 2 Up-to-date information on the latest versions of the European Standards listed in this annex is available here: www.cenelec.eu.

Publication	Year	Title	EN/HD	Year
IEC 60364	Series	Low voltage electrical installations	HD 60364	Series
IEC 60364-4-41 (mod.) +A1 (mod.)	2005 2017	Low-voltage electrical installations - Part 4-41: Protection for safety - Protection against electric shock	HD 60364-4-41	2017
IEC 60364-4-43 (mod.)	2008	Low-voltage electrical installations - Part 4-43: Protection for safety - Protection against voltage overcurrent	HD 60364-4-43	2010
IEC 60364-5-53 +A1 (mod.) +A2 (mod.)	2001 2002 2015	Low-voltage electrical installations - Part 5-53: Selection and erection of electrical equipment - Isolation, switching and control - Clause 534: Devices for protection against transient overvoltages	HD 60364-5-534	2016
IEC 60364-5-55	2011	Low-voltage electrical installations - Part 5-559: Selection and erection of electrical equipment - Luminaires and lighting installations	HD 60364-5-559	2012
+A1	2012	Low-voltage electrical installations - Part 5-557: Selection and erection of electrical equipment - Auxiliary circuits	HD 60364-5-557	2013
+A2	2016	Low-voltage electrical installations - Part 5-55: Selection and erection of electrical equipment - Other equipment	-	-
IEC 60364-7-712	-	Low-voltage electrical installations: Part 7-712: Requirements for special installations or locations - Solar photovoltaic (PV) power supply systems	HD 60364-7-712	-
IEC 60364-8-1	2014	Low-voltage electrical installations: Part 8-1: Energy efficiency	HD 60364-8-1	2015

Documents
Document Sharing Hub

Full document details: BS HD 60364-8-2:2011+A11:2019

Annex ZB
(normative)

Special National Conditions

Special national condition: National characteristic or practice that cannot be changed even over a long period, e.g. climatic conditions, electrical earthing conditions.

NOTE If it affects harmonization, it forms part of the Harmonization Document.

For the countries in which the relevant special national conditions apply these provisions are normative, for other countries they are informative.

Country	Clause n°	Wording
Austria	General	National regulations exist. The content of the document will therefore be used for information only.
	6.4 to 6.5	There is no legal basis in some countries to establish such a system.
	7.2	In Austria, with regard to collective or shared PEI, there is no legal basis to establish such a system.
Norway	8.1.1.1	In Norway, replace the last 3 paragraphs of 8.1.1.1 with the following: The selected type of system earthing for the installation shall be ensured in all operation modes. The measures for protection against electric shock shall comply with the relevant requirements of NEK 400-4-41:2018 and NEK 400-5-51:2018, clause 551(HD 60364-4-41 and HD 60364-5-55, clause 551).
	8.1.1.2.1	In Norway, the first two paragraphs are replaced by the following: In order to ensure that the type of system earthing is maintained in all operation modes, a PEI shall be provided with its own earth electrode. This earth electrode shall be connected to the main earthing terminal of the installation.

Documents
Document Sharing Hub
Full document details: BS HD 60364-8-2:2011+A11:2019

	8.1.1.2.2	In Norway, the complete clause is replaced by the following: In a TT- or TT-installation with more than one generating set (including the network supply) and where it is planned that a generating set shall be able to supply the installation independent from the other supplies, the neutral point of this generating set shall be permanently and without any possibility for disconnection connected to the earthing of the sources for the installation. In those cases where the earthing of the sources system earthing is provided by one of the generating set or supplies, a temporary earthing of the sources for the installation shall be established before the earthing of the sources for the installation is disconnected. This temporary earthing of the sources shall be disconnected after the reconnection of the earthing of the sources for the installation. NOTE It is necessary to ensure that the N- and PE-conductors inside the generating sets are not interconnected. The following figure illustrates this concept: 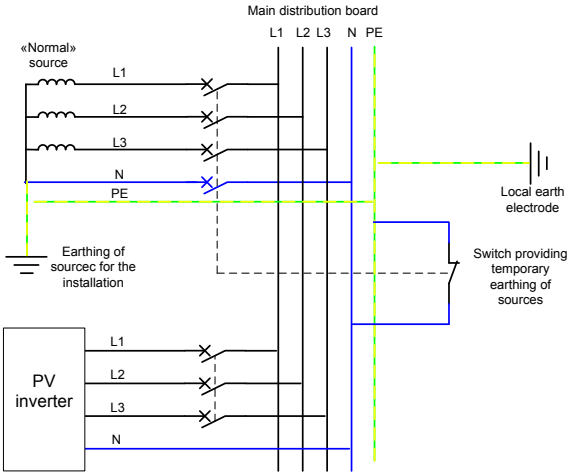
	8.1.1.2.3	In Norway, this clause does not apply
Portugal	6.4 to 6.5	There is no legal basis in some countries to establish such a system.

Documents
Document Sharing Hub

Full document details: BS HD 60364-8-2:2011+A11:2019

CONTENTS

FOREWORD 5
INTRODUCTION 7
1 Scope 8
2 Normative references 8
3 Terms and definitions 9
4 Interaction of smart grid and PEI 11
4.1 Main objectives 11
4.2 Safety 11
4.3 Proper functioning 11
4.4 Implementation of PEI 11
5 PEI concept 11
6 Types of PEI 13
6.1 General 13
6.2 Operating modes 13
6.3 Individual PEI 13
6.4 Collective PEI 14
6.5 Shared PEI 17
7 Electrical energy management system (EEMS) 20
7.1 General 20
7.2 Architecture of EEMS 20
8 Technical issues 21
8.1 Safety issues 21
8.1.1 Protection against electric shock 21
8.1.2 Protection against overcurrent 25
8.1.3 Outage of the public network 26
8.1.4 Protection against transient overvoltages 27
8.2 Interaction with the public network 27
8.3 Energy storage 27
8.4 Design for flexibility of load and generators (demand/response) 27
8.5 Electric vehicle charging 27
8.6 Selectivity between current protective devices 27
Annex A (informative) Objectives and concept of PEI 29
Annex B (informative) Operating modes 30
B.1 Operating modes for individual PEI 30
B.1.1 Direct feeding mode 30
B.1.2 Island mode 30
B.1.3 Reverse feeding mode 31
B.2 Operating modes for collective PEI 32
B.2.1 Direct feeding mode 32
B.2.2 Island mode 34
B.2.3 Reverse feeding mode 36
B.3 Operating modes for shared PEI 37
B.3.1 Direct feeding mode 37
B.3.2 Island mode 39
B.3.3 Reverse feeding mode 41

AVA Documents
Document Sharing Hub

Full document details: BS HD 60364-8-2:2011+A11:2019

Annex C (informative) Interaction with the public network 43
C.1 General....43
C.2 National grid codes compliance with active and reactive power control 43
C.3 Voltage control....43
C.4 Frequency control 43
C.5 Load shedding programme....43
Annex D (informative) Architecture of PEI 44
D.1 Architecture of individual PEI 44
D.2 Architecture of collective PEI 44
D.3 Architecture of shared PEI 46
Annex E (informative) List of notes concerning certain countries....47
Bibliography....48

Figure 1 – Example of prosumer's low-voltage electrical installation 12
Figure 2 – Example of electrical design of individual PEI 14
Figure 3 – Example of electrical design of collective PEI using DSO distribution system 14
Figure 4 – Example of electrical design of collective PEI with distribution system within PEI.15
Figure 5 – Example of electrical design of collective PEI with distribution system within PEI in parallel with DSO distribution system....16
Figure 6 – Example of electrical design of shared PEI using DSO distribution system 17
Figure 7 – Example of electrical design of shared PEI with distribution system within PEI....18
Figure 8 – Example of electrical design of shared PEI with distribution system within PEI in parallel with DSO distribution system....19
Figure 9 – Connection to the local earthing arrangement (TN, TT and IT system) 23
Figure 10 – Estimation of the minimum earth fault current according to the operating mode (connected and island) 24
Figure 11 – Example of double short-circuit protection for the same circuit 26
Figure 12 – Example of selectivity with various power supplies 28
Figure B.1 – Example of electrical design of individual PEI operating in direct feeding mode 30
Figure B.2 – Example of electrical design of individual PEI operating in island mode 31
Figure B.3 – Example of electrical design of individual PEI operating in reverse feeding mode 32
Figure B.4 – Example of electrical design of collective PEI operating in direct feeding mode with one single electrical installation....33
Figure B.5 – Example of electrical design of collective PEI operating in direct feeding mode with several electrical installations 34
Figure B.6 – Example of electrical design of collective PEI operating in island mode with one single electrical installation 35
Figure B.7 – Example of electrical design of collective PEI operating in island mode with several electrical installations 35
Figure B.8 – Example of electrical design of collective PEI operating in reverse feeding mode with one single electrical installation 36
Figure B.9 – Example of electrical design of collective PEI operating in reverse feeding mode with several electrical installations 37
Figure B.10 – Example of electrical design of shared PEI operating in direct feeding mode with one single electrical installation....38

Documents
Document Sharing Hub
Full document details: BS HD 60364-8-2:2011+A11:2019

Figure B.11 – Example of electrical design of shared PEI operating in direct feeding mode with several electrical installations 39
Figure B.12 – Example of electrical design of shared PEI operating in island mode with one single electrical installation 40
Figure B.13 – Example of electrical design of shared PEI operating in island mode with several electrical installations 41
Figure B.14 – Example of electrical design of shared PEI operating in reverse feeding mode 42
Figure D.1 – Example of type of architecture of individual PEI 44
Figure D.2 – Example of type of architecture of collective PEI 45
Figure D.3 – Example of type of architecture of shared PEI 46

Documents
Document Sharing Hub

Full document details: BS HD 60364-8-2:2011+A11:2019

INTERNATIONAL ELECTROTECHNICAL COMMISSION

LOW-VOLTAGE ELECTRICAL INSTALLATIONS –

Part 8-2: Prosumer's low-voltage electrical installations

FOREWORD

1) The International Electrotechnical Commission (IEC) is a worldwide organization for standardization comprising all national electrotechnical committees (IEC National Committees). The object of IEC is to promote international co-operation on all questions concerning standardization in the electrical and electronic fields. To this end and in addition to other activities, IEC publishes International Standards, Technical Specifications, Technical Reports, Publicly Available Specifications (PAS) and Guides (hereafter referred to as "IEC Publication(s)"). Their preparation is entrusted to technical committees; any IEC National Committee interested in the subject dealt with may participate in this preparatory work. International, governmental and non-governmental organizations liaising with the IEC also participate in this preparation. IEC collaborates closely with the International Organization for Standardization (ISO) in accordance with conditions determined by agreement between the two organizations.
2) The formal decisions or agreements of IEC on technical matters express, as nearly as possible, an international consensus of opinion on the relevant subjects since each technical committee has representation from all interested IEC National Committees.
3) IEC Publications have the form of recommendations for international use and are accepted by IEC National Committees in that sense. While all reasonable efforts are made to ensure that the technical content of IEC Publications is accurate, IEC cannot be held responsible for the way in which they are used or for any misinterpretation by any end user.
4) In order to promote international uniformity, IEC National Committees undertake to apply IEC Publications transparently to the maximum extent possible in their national and regional publications. Any divergence between any IEC Publication and the corresponding national or regional publication shall be clearly indicated in the latter.
5) IEC itself does not provide any attestation of conformity. Independent certification bodies provide conformity assessment services and, in some areas, access to IEC marks of conformity. IEC is not responsible for any services carried out by independent certification bodies.
6) All users should ensure that they have the latest edition of this publication.
7) No liability shall attach to IEC or its directors, employees, servants or agents including individual experts and members of its technical committees and IEC National Committees for any personal injury, property damage or other damage of any nature whatsoever, whether direct or indirect, or for costs (including legal fees) and expenses arising out of the publication, use of, or reliance upon, this IEC Publication or any other IEC Publications.
8) Attention is drawn to the Normative references cited in this publication. Use of the referenced publications is indispensable for the correct application of this publication.
9) Attention is drawn to the possibility that some of the elements of this IEC Publication may be the subject of patent rights. IEC shall not be held responsible for identifying any or all such patent rights.

International Standard IEC 60364-8-2 has been prepared by IEC technical committee 64: Electrical installations and protection against electric shock.

The text of this International Standard is based on the following documents:

FDIS	Report on voting
64/2298/FDIS	64/2335/RVD

Full information on the voting for the approval of this International Standard can be found in the report on voting indicated in the above table.

This document has been drafted in accordance with the ISO/IEC Directives, Part 2.

A list of all parts in the IEC 60364 series, published under the general title *Low-voltage electrical installations*, can be found on the IEC website.

Documents
Document Sharing Hub

Full document details: BS HD 60364-8-2:2011+A11:2019

The reader's attention is drawn to the fact that Annex E lists all of the “in-some-country” clauses on differing practices of a less permanent nature relating to the subject of this standard.

The committee has decided that the contents of this document will remain unchanged until the stability date indicated on the IEC website under "http://webstore.iec.ch" in the data related to the specific document. At this date, the document will be

- reconfirmed,
- withdrawn,
- replaced by a revised edition, or
- amended.

IMPORTANT – The 'colour inside' logo on the cover page of this publication indicates that it contains colours which are considered to be useful for the correct understanding of its contents. Users should therefore print this document using a colour printer.

Documents
Document Sharing Hub

Full document details: BS HD 60364-8-2:2011+A11:2019

INTRODUCTION

Historically, utilities were managing the public transmission and distribution network from the point of view of having a central production adapted to demand variation, a top-down energy flow, a production/consumption balance done by integrated utility companies and with rather passive users.

The following key factors are pushing the public electricity network to change:

- the increasing number of electronic devices used daily and the growing needs as well as future needs (e.g. charging electric vehicles) will result in the structural growing of electricity consumption;
- the mediated pressure on climate change results in pressure on CO_2 emissions reduction;
- the electricity market is also quickly changing due mainly to its unbundling and deregulation, and to the greater number of intermittent renewable energy sources (global and local);
- users' expectations are also evolving as a result of an increasing need for better public networks reliability and quality, the search for better economic performance and the willingness to pro-actively manage their energy;
- technological evolution should also be considered as information and communication technology (ICT) is affordable and new energy storage solutions are emerging.

All stakeholders directly involved in the electricity generation, transmission, distribution and consumption have new expectations:

- customers are willing to reduce electrical energy costs in order to meet environment targets (renewable energy, energy efficiency) but also wish to benefit from the quality of electricity supply;
- suppliers wish to limit customer churn rate with price and service management;
- producers expect to maximize their yield of assets, to optimize their investments and to take profit from energy trading;
- the aggregator wants to create conditions suitable for new market emergence;
- the transmission system operator (TSO) aspires to a robust transmission public network and to meet regulation objectives (price and level of services), while the distribution system operator (DSO) wants to meet regulation objectives (price and level of services), to reduce costs by productivity (including meter) and to have a flexible network;
- finally, governments and regulators are willing to create a competitive and sustainable energy market.

The objective of this document is to ensure that the low-voltage electrical installation is compatible with the current and future ways to deliver safely and functionally the electrical energy to current-using equipment either from the public network or from other local sources. This document is not intended to influence all stakeholders of electricity supply on how the electrical energy should be sold and delivered.

Documents
Document Sharing Hub

Full document details: BS HD 60364-8-2:2011+A11:2019

LOW-VOLTAGE ELECTRICAL INSTALLATIONS –

Part 8-2: Prosumer's low-voltage electrical installations

1 Scope

This part of IEC 60364 provides additional requirements, measures and recommendations for design, erection and verification of all types of low-voltage electrical installation according to IEC 60364-1:2005, Clause 11, including local production and/or storage of energy in order to ensure compatibility with the existing and future ways to deliver electrical energy to current-using equipment or to the public network by means of local sources. Such electrical installations are designated as prosumer's electrical installations (PEIs).

This document also provides requirements for proper behaviour and actions of PEIs in order to efficiently obtain sustainable and safe operations of these installations when integrated into smart grids.

These requirements and recommendations apply, within the scope of IEC 60364 (all parts), for new installations and modification of existing installations.

NOTE Electrical sources for safety services including associated electrical installations and standby electrical supply systems for a secure continuity of supply, which are operated only occasionally and for short periods (e.g. monthly one hour) in parallel with the distribution grid for testing purposes, are outside the scope of this document.

2 Normative references

The following documents are referred to in the text in such a way that some or all of their content constitutes requirements of this document. For dated references, only the edition cited applies. For undated references, the latest edition of the referenced document (including any amendments) applies.

IEC 60364-4-41:2005, *Low-voltage electrical installations – Part 4-41: Protection for safety – Protection against electric shock*
IEC 60364-4-41/AMD1:2017

IEC 60364-4-43:2008, *Low-voltage electrical installations – Part 4-43: Protection for safety – Protection against overcurrent*

IEC 60364-5-53:2001, *Electrical installations of buildings – Part 5-53: Selection and erection of electrical equipment – Isolation, switching and control*
IEC 60364-5-53:2001/AMD1:2002
IEC 60364-5-53:2001/AMD2:2015

IEC 60364-5-55:2011, *Electrical installations of buildings – Part 5-55: Selection and erection of electrical equipment – Other equipment*
IEC 60364-5-55:2011/AMD1:2012
IEC 60364-5-55:2011/AMD2:2016

IEC 60364-7-712, *Low-voltage electrical installations – Part 7-712: Requirements for special installations or locations – Solar photovoltaic (PV) power supply systems*

IEC 60364-8-1:2014, *Low-voltage electrical installations – Part 8-1: Energy efficiency*

Documents
Document Sharing Hub
Full document details: BS HD 60364-8-2:2011+A11:2019

3 Terms and definitions

For the purposes of this document, the following terms and definitions apply.

ISO and IEC maintain terminological databases for use in standardization at the following addresses:

- IEC Electropedia: available at http://www.electropedia.org/
- ISO Online browsing platform: available at http://www.iso.org/obp

3.1
smart grid
electric power system that utilizes information exchange and control technologies, distributed computing and associated sensors and actuators, for purposes such as:

- to integrate the behaviour and actions of the network users and other stakeholders,
- to efficiently deliver sustainable, economic and secure electricity supplies

[SOURCE: IEC 60050-617:2011, 617-04-13]

3.2
prosumer's electrical installation
PEI
low-voltage electrical installation connected or not to a public distribution network able to operate:

- with local power supplies, and/or
- with local storage units,

and that monitors and controls the energy from the connected sources delivering it to:

- current-using equipment, and/or
- local storage units, and/or
- public distribution network

3.3
individual PEI
single consuming and/or producing electrical installation

3.4
collective PEI
several consuming electrical installations connected to the same public distribution network and sharing one common set of local power supplies and energy storage equipment

3.5
shared PEI
several consuming and/or producing electrical installations similar to an individual PEI connected to the same low-voltage public distribution network and sharing their individual power supplies and energy storage equipment between themselves

3.6
prosumer
entity or party which can be both a producer and a consumer of electrical energy

3.7
producer
<of electricity> party generating electrical energy

[SOURCE: IEC 60050-617:2009, 617-02-01]

Documents
Document Sharing Hub

Full document details: BS HD 60364-8-2:2011+A11:2019

3.8
consumer
<of electricity> entity or party which uses electricity for its own needs

3.9
electrical energy management system
EEMS
system comprising different equipment and devices in the installation for the purpose of energy management

Note 1 to entry: This equipment can be stand-alone or integrated in other larger equipment such as a home and building electronic system.

[SOURCE: IEC 60364-8-1:2014, 3.2.2, modified – “efficiency” has been deleted and Note 1 to entry has been added.]

3.10
distribution system operator
DSO
party operating a distribution system

3.11
operating mode
operation of an installation with respect to the different sources of electrical energy and to energy flow

3.12
direct feeding mode
operating mode in which the public network supplies the PEI

Note 1 to entry: Local storage units can supply current-using equipment or be charged by local power supplies and/or the public distribution network.

3.13
reverse feeding mode
operating mode in which the PEI supplies the public network

Note 1 to entry: Local storage units can supply current-using equipment and/or the public distribution network or be charged by local power supplies.

3.14
connected mode
operating mode which needs connection to the public network (direct feeding mode and reverse feeding mode)

3.15
island mode
operating mode in which the PEI is disconnected from the public distribution system, but remains energized

Note 1 to entry: An island can be either the result of the action of automatic protections or the result of a deliberate action.

[SOURCE: IEC 60050-617:2009, 617-04-12, modified – The definition has been adapted to the PEI.]

Documents
Document Sharing Hub

Full document details: BS HD 60364-8-2:2011+A11:2019