BS IEC 60092-501:2013

BSI Standards Publication

Electrical installations in ships

Part 501: Special features — Electric propulsion plant

bsi.

...making excellence a habit.™

Document Sharing Hub

Full document details: BS IEC 60092-501:2013

National foreword

This British Standard is the UK implementation of IEC 60092-501:2013. It supersedes BS IEC 60092-501:2007 which is withdrawn.

The UK participation in its preparation was entrusted to Technical Committee JPEL/18, Electrical installations of ships and of mobile and fixed offshore units.

A list of organizations represented on this committee can be obtained on request to its secretary.

This publication does not purport to include all the necessary provisions of a contract. Users are responsible for its correct application.

© The British Standards Institution 2013.
Published by BSI Standards Limited 2013

ISBN 978 0 580 82074 8
ICS 47.020.60

Compliance with a British Standard cannot confer immunity from legal obligations.

This British Standard was published under the authority of the Standards Policy and Strategy Committee on 31 October 2013.

Amendments/corrigenda issued since publication

Date	Text affected

Documents
Document Sharing Hub

Full document details: BS IEC 60092-501:2013

IEC 60092-501

Edition 5.0 2013-10

INTERNATIONAL STANDARD

Electrical installations in ships – Part 501: Special features – Electric propulsion plant

INTERNATIONAL
ELECTROTECHNICAL
COMMISSION

PRICE CODE X

ICS 47.020.60

ISBN 978-2-8322-1177-9

Warning! Make sure that you obtained this publication from an authorized distributor.

® Registered trademark of the International Electrotechnical Commission

Documents
Document Sharing Hub

Full document details: BS IEC 60092-501:2013

CONTENTS

FOREWORD 5
INTRODUCTION 7
1 Scope 8
2 Normative references 8
3 Terms and definitions 9
4 System 11
4.1 System design 11
4.1.1 General 11
4.1.2 Design requirements 12
4.1.3 Blocking devices for shafts 12
4.1.4 Special requirements for ships with only one propulsion motor 12
4.1.5 Special requirements for ships with more than one propulsion motor 13
4.2 System responsibility 13
4.3 Torsional stress and torsional vibrations 13
4.4 Protection and operational stability 13
4.5 Protection against moisture and condensate 14
4.6 Excitation systems 14
4.6.1 General requirements 14
4.6.2 Generators 14
4.6.3 Propulsion motors 15
4.7 Wires, cables, busbars, trunking systems 15
5 Electromagnetic compatibility (EMC) and harmonic distortion 15
5.1 General 15
5.2 Total harmonic distortion, THD 15
5.3 Conducted and radiated RF emissions 15
6 Prime movers 16
6.1 General requirements 16
6.2 Speed deviations 16
6.3 Parallel operation 16
6.4 Regenerated energy from propeller 16
7 Generators 16
7.1 General requirements 16
7.2 Bearing and lubrication 17
7.2.1 General 17
7.2.2 Sleeve bearings 17
7.2.3 Roller bearings 17
7.3 Cooling 17
7.4 Protection 18
7.5 Test 18
8 Propulsion switchboards 18
8.1 General 18
8.2 Test 18
9 Propulsion transformers 18
9.1 General requirements 18
9.1.1 General 18

AVA Documents
Document Sharing Hub
Full document details: BS IEC 60092-501:2013

9.1.2 Degree of protection ... 19
9.2 Cooling ... 19
9.2.1 Liquid cooled transformers ... 19
9.2.2 Air cooled transformers ... 19
9.2.3 Air forced/water cooled transformers ... 19
9.3 Instrumentation ... 19
9.4 Protection ... 19
9.5 Test ... 20
10 Convertors ... 20
10.1 General ... 20
10.2 Design of semiconductor convertors ... 20
10.3 Cooling of semiconductor convertors ... 20
10.4 Protection ... 21
10.5 Test ... 21
11 Harmonic filtering ... 21
12 Propulsion motors ... 22
12.1 General requirements ... 22
12.2 Bearing and lubrication ... 22
12.3 Cooling of propulsion motors ... 22
12.4 Protection against moisture and condensate ... 22
12.5 Protection ... 22
12.5.1 Overcurrent ... 22
12.5.2 Overspeed of propulsion motors ... 23
12.6 Test ... 23
12.7 Short-circuit withstand capability ... 23
12.8 Accessibility and facilities for repairs *in situ* ... 23
13 Special requirements for podded drives ... 24
13.1 General requirements ... 24
13.2 Sensors ... 24
13.2.1 General requirements ... 24
13.2.2 Bearings ... 24
13.2.3 Bilges ... 24
13.2.4 Fire alarm ... 25
13.2.5 Accessible areas ... 25
13.3 Protection of the propulsion motor against internal fault ... 25
13.4 Air humidity ... 25
13.5 Motor supply lines ... 25
13.6 Slip rings ... 25
13.6.1 General ... 25
13.6.2 Tests ... 26
13.7 Azimuth drive ... 26
13.7.1 General requirements ... 26
13.7.2 Thrust azimuth angle ... 27
13.7.3 Control ... 27
13.7.4 Additional requirements on control stations for azimuth drives ... 27
13.7.5 Additional start blocking criteria ... 27
14 Control ... 28
14.1 General ... 28

AVA Documents
Document Sharing Hub
Full document details: BS IEC 60092-501:2013

14.2 Power management system (PMS) ... 28
14.2.1 General ... 28
14.2.2 Test ... 28
14.3 Typical control configuration ... 28
14.4 Location of manoeuvring controls ... 29
14.5 Main and local control stations ... 30
14.6 Measuring, indicating, control and monitoring equipment ... 30
14.6.1 General requirements ... 30
14.6.2 At local control station ... 30
14.6.3 At (main) control station on the bridge ... 31
14.6.4 At (main) control station in the engine control room ... 31
14.7 Availability ... 31
14.8 Start blockings ... 32
14.9 Factory acceptance test (FAT) ... 32
15 Tests ... 32
15.1 General ... 32
15.2 In-process tests ... 33
15.3 Factory acceptance test ... 33
15.4 Dock and sea trials ... 33
16 Documentation ... 34
Annex A (normative) Protection and alarm matrix ... 35
A.1 General ... 35
A.2 Protection and alarms ... 35
Bibliography ... 44

Figure 1 – Typical equipment (configuration) for ships with one or two propellers ... 12
Figure 2 – Typical control configuration ... 29
Figure A.1 – Propulsion equipment with monitored items ... 35

Table A.1 – Protection and alarms, permanent excited motor *(1 of 2)* ... 36
Table A.2 – Protection and alarms, synchronous motor *(1 of 2)* ... 38
Table A.3 – Protection and alarms, asynchronous motor *(1 of 2)* ... 40
Table A.4 – Protection and alarms, DC motor *(1 of 2)* ... 42

Documents
Document Sharing Hub
Full document details: BS IEC 60092-501:2013

INTERNATIONAL ELECTROTECHNICAL COMMISSION

ELECTRICAL INSTALLATIONS IN SHIPS –

Part 501: Special features – Electric propulsion plant

FOREWORD

1) The International Electrotechnical Commission (IEC) is a worldwide organization for standardization comprising all national electrotechnical committees (IEC National Committees). The object of IEC is to promote international co-operation on all questions concerning standardization in the electrical and electronic fields. To this end and in addition to other activities, IEC publishes International Standards, Technical Specifications, Technical Reports, Publicly Available Specifications (PAS) and Guides (hereafter referred to as "IEC Publication(s)"). Their preparation is entrusted to technical committees; any IEC National Committee interested in the subject dealt with may participate in this preparatory work. International, governmental and non-governmental organizations liaising with the IEC also participate in this preparation. IEC collaborates closely with the International Organization for Standardization (ISO) in accordance with conditions determined by agreement between the two organizations.
2) The formal decisions or agreements of IEC on technical matters express, as nearly as possible, an international consensus of opinion on the relevant subjects since each technical committee has representation from all interested IEC National Committees.
3) IEC Publications have the form of recommendations for international use and are accepted by IEC National Committees in that sense. While all reasonable efforts are made to ensure that the technical content of IEC Publications is accurate, IEC cannot be held responsible for the way in which they are used or for any misinterpretation by any end user.
4) In order to promote international uniformity, IEC National Committees undertake to apply IEC Publications transparently to the maximum extent possible in their national and regional publications. Any divergence between any IEC Publication and the corresponding national or regional publication shall be clearly indicated in the latter.
5) IEC itself does not provide any attestation of conformity. Independent certification bodies provide conformity assessment services and, in some areas, access to IEC marks of conformity. IEC is not responsible for any services carried out by independent certification bodies.
6) All users should ensure that they have the latest edition of this publication.
7) No liability shall attach to IEC or its directors, employees, servants or agents including individual experts and members of its technical committees and IEC National Committees for any personal injury, property damage or other damage of any nature whatsoever, whether direct or indirect, or for costs (including legal fees) and expenses arising out of the publication, use of, or reliance upon, this IEC Publication or any other IEC Publications.
8) Attention is drawn to the Normative references cited in this publication. Use of the referenced publications is indispensable for the correct application of this publication.
9) Attention is drawn to the possibility that some of the elements of this IEC Publication may be the subject of patent rights. IEC shall not be held responsible for identifying any or all such patent rights.

International Standard IEC 60092-501 has been prepared by IEC technical committee 18: Electrical installations of ships and of mobile and fixed offshore units.

This fifth edition cancels and replaces the fourth edition published in 2007. It constitutes a technical revision.

This edition included the following significant technical changes with respect to the previous edition:

a) requirements regarding system responsibility, electromagnetic compatibility (EMC), harmonic distortion and filtering, special requirements for ships with propulsion motor(s) and podded drives, and power management system (PMS);
b) overall technical review to update the standard according to general requirements and referenced equipment standards.

Documents
Document Sharing Hub
Full document details: BS IEC 60092-501:2013

The text of this standard is based on the following documents:

FDIS	Report on voting
18/1338/FDIS	18/1353/RVD

Full information on the voting for the approval of this standard can be found in the report on voting indicated in the above table.

This publication has been drafted in accordance with the ISO/IEC Directives, Part 2.

A list of all parts of the IEC 60092 series, published under the general title *Electrical installations in ships*, can be found on the IEC website.

The committee has decided that the contents of this publication will remain unchanged until the stability date indicated on the IEC web site under "http://webstore.iec.ch" in the data related to the specific publication. At this date, the publication will be

- reconfirmed,
- withdrawn,
- replaced by a revised edition, or
- amended.

A bilingual version of this publication may be issued at a later date.

Documents
Document Sharing Hub

Full document details: BS IEC 60092-501:2013

INTRODUCTION

IEC 60092 forms a series of International Standards for electrical installations in sea-going ships, incorporating good practice and coordinating, as far as possible, existing rules. These standards form a code of practical interpretation and amplification of the requirements of the International Convention on Safety of Life at Sea, a guide for future regulations which may be prepared and a statement of practice for use by shipowners, shipbuilders and appropriate organizations.

Documents
Document Sharing Hub
Full document details: BS IEC 60092-501:2013

ELECTRICAL INSTALLATIONS IN SHIPS –

Part 501: Special features – Electric propulsion plant

1 Scope

This part of IEC 60092 specifies requirements for all electric propulsion plants and gives the specifications, system design, installation and testing of at least:

– generators and their prime movers;
– switchboards;
– transformers/reactors;
– semiconductor convertors;
– propulsion motors;
– excitation systems;
– control, monitoring and safety systems;
– wires, cables, busbars, trunking systems;
– harmonic filters.

Bow and stern thrusters intended as auxiliary steering devices, booster and take-home devices, all auxiliary generating plants, and accumulator battery powered propulsion machinery and equipment are excluded.

2 Normative references

The following documents, in whole or in part, are normatively referenced in this document and are indispensable for its application. For dated references, only the edition cited applies. For undated references, the latest edition of the referenced document (including any amendments) applies.

IEC 60034 (all parts), *Rotating electrical machines*

IEC 60034-1:2010, *Rotating electrical machines – Part 1: Rating and performance*

IEC 60076 (all parts), *Power transformers*

IEC 60092 (all parts), *Electrical installations in ships*

IEC 60092-101, *Electrical installations in ships – Part 101: Definitions and general requirements*

IEC 60092-202, *Electrical installations in ships – Part 202: System design – Protection*

IEC 60092-301, *Electrical installations in ships – Part 301: Equipment – Generators and motors*

IEC 60092-302, *Electrical installations in ships* – Part 302: *Low-voltage switchgear and controlgear assemblies*

Documents
Document Sharing Hub
Full document details: BS IEC 60092-501:2013

IEC 60092-303, *Electrical installations in ships – Part 303: Equipment - Transformers for power and lighting*

IEC 60092-352, *Electrical installations in ships – Part 352: Choice and installation of electrical cables*

IEC 60092-401, *Electrical installations in ships – Part 401: Installation and test of completed installation*

IEC 60092-504:2001, *Electrical installations in ships – Part 504: Special features – Control and instrumentation*

IEC 60146 (all parts), *Semiconductor convertors*

IEC 60146-2, *Semiconductor convertors – Part 2: Self-commutated semiconductor converters including direct d.c. convertors*

IEC 60529, *Degrees of protection provided by enclosures (IP Code)*

IEC 60533:1999, *Electrical and electronic installations in ships – Electromagnetic compatibility*

IEC 61000-6-2, *Electromagnetic compatibility (EMC) – Part 6-2: Generic standards – Immunity for industrial environments*

IEC 61180-1, *High-voltage test techniques for low-voltage equipment, Part 1: Definitions, test and procedure requirements*

IEC 61378-1, *Convertor transformers – Part 1: Transformers for industrial applications*

IEC 61439-1, *Low-voltage switchgear and controlgear assemblies Part 1: General rules*

IEC 61439-2, *Low-voltage switchgear and controlgear assemblies Part 2: Power switchgear and controlgear assemblies*

IEC 61800 (all parts), *Adjustable speed electrical power drive systems*

IEC 62271-200:2011, *High-voltage switchgear and controlgear – Part 200: AC metal-enclosed switchgear and controlgear for rated voltages above 1 kV and up to and including 52 kV*

International Convention for the Safety of Life at Sea (SOLAS):1974, *Consolidated edition 2009*

3 Terms and definitions

For the purposes of this document, the following terms and definitions apply:

3.1
appropriate authority
governmental body and/or classification society with whose rules the installation is required to comply

[SOURCE: IEC 60092-101:1995, 1.3, modified — The words “a ship“ has been replaced with “the installation”.]

Documents
Document Sharing Hub
Full document details: BS IEC 60092-501:2013

3.2
azimuth drive
system which moves the propulsion unit around the vertical axis

3.3
double sensor
two sensor elements in one housing

3.4
motor supply lines
cables and/or busbars used for supply to the propulsion motor(s)

3.5
local control station
place of control where a system is installed which creates a reference value for the convertors independent from the remote control system and any external limitations

3.6
main control station
place of control of the main propulsion system which is manned under seagoing conditions

3.7
inaccessible spaces
spaces that are not accessible during operation without dry docking.

3.8
nominated body
installer or manufacturer that has been given direct responsibility for the complete propulsion system

3.9
single failure criterion
criterion applied to a system such that it maintains manoeuvrability in the presence of any single failure

[SOURCE: IEC 60050-393:2003, 393-18-27, modified — The phrase “it is able to perform its safety task” has been replaced with “it maintains manoeuvrability”]

3.10
podded drive
propulsion system in which the motor is located in a dedicated, submerged unit (pod housing) of the ship

3.11
power management system
PMS
control and safety system which provides the load depending starts and stops of the prime movers, the load sharing, etc.

3.12
propulsion generator
generator mainly used for power supply of the propulsion system

3.13
propulsion motor
electrical motor intended to provide propulsion power

Documents
Document Sharing Hub
Full document details: BS IEC 60092-501:2013

3.14
propulsion switchboard
switchboard mainly used for power distribution to the propulsion systems

3.15
redundant sensor
two single sensors in separate housings

3.16
remote control system
system which comprises all equipment necessary to operate units from a control position where the operator cannot directly observe the effect of his actions

4 System

4.1 System design

4.1.1 General

A typical electrical propulsion system may consist of the following hardware components:

– propulsion generators;
– switchboard;
– transformers to convert the ships voltage to the convertor voltage;
– convertor to supply the electric motor;
– control system;
– propulsion motor.

A typical configuration of the hardware components is shown in Figure 1.

Documents
Document Sharing Hub
Full document details: BS IEC 60092-501:2013

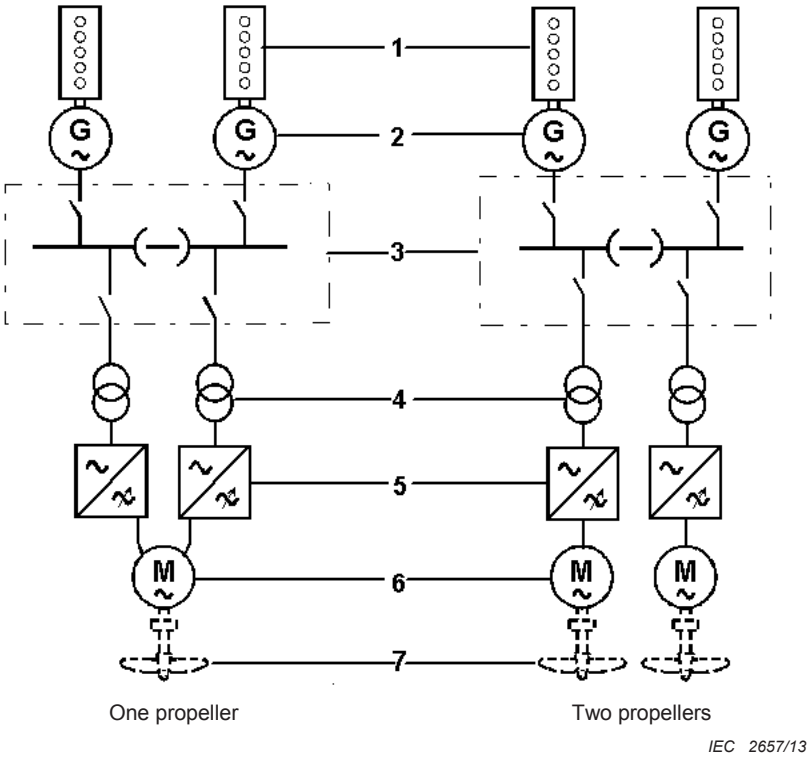

Key

1 main engine
2 propulsion generator
3 switchboard
4 propulsion transformer
5 propulsion convertor
6 propulsion motor
7 propeller

Figure 1 – Typical equipment (configuration) for ships with one or two propellers

4.1.2 Design requirements

The single failure criterion shall be the basis of the design of the electric propulsion system.

Recognizable failures should not injure the single failure criterion. Undetected failures should be avoided. However, it may be unavoidable that some undetected failures may injure the single failure criterion.

It shall be possible for all machinery essential for the safe operation of the ship to be controlled from a local position, even in the case of failure in any part of the automatic remote control system, see Clause 14.

4.1.3 Blocking devices for shafts

Each shaft shall be equipped with a blocking device to prevent shaft rotation, allowing towing or the operation of the remaining shaft(s). The drive(s) for the remaining shaft(s) may be limited as long as manoeuvring capability is maintained under all weather conditions.

4.1.4 Special requirements for ships with only one propulsion motor

Synchronous and induction motors shall be equipped with two stator winding systems which can be disconnected from the respective convertor. Each convertor shall be designed for at least 50 % nominal power of the propulsion drive.

Documents
Document Sharing Hub
Full document details: BS IEC 60092-501:2013

DC motors shall have two separate rectifiers, each for 50 % nominal motor current, with means for disconnecting each rectifier. The convertors shall be mutually independent. Any single failure in one convertor shall not result in complete loss of propulsion power.

Motors with permanent excitation shall be equipped with two stator winding systems which can be disconnected from the respective convertor. Additionally, there shall be a braking or blocking system which can fix the shaft under all weather and normal towing conditions. Alternatively, a decoupling system may be used which ensures standstill of motor shaft.

NOTE Winding damages will lead to the total loss of the propulsion motor. In this case the single failure design criteria cannot be fulfilled.

Auxiliary machinery vital to the propulsion system, such as cooling, lubrication, etc. must be provided in duplicate in order to provide continued or restored propulsion capability in the event of a failure or malfunction of any single auxiliary component.

4.1.5 Special requirements for ships with more than one propulsion motor

Any electrical failure in a propulsion convertor or propulsion motor shall not make all shafts unavailable.

Special consideration in this respect shall be given to shaft lines driven by permanent exited propulsion motors.

4.2 System responsibility

There shall be one nominated body responsible for the integration of the complete propulsion system.

This body shall have the necessary expertise and resources enabling a controlled integration process.

4.3 Torsional stress and torsional vibrations

Motors and shaftlines shall be capable of withstanding all loading conditions. Evidence shall be provided by means of a torsional vibration calculation.

The entire oscillating system may include prime movers, generators, transformers, convertors, exciters, motors, slip couplings, gears, shafts and propellers.

The manufacturers of the components shall provide all necessary information to the system responsible body, see 4.2.

The highest oscillating torque may be expected during a two-phase short-circuit of the motor. The highest steady state torque may be expected during a three-phase short-circuit of the motor.

All possible load conditions shall be managed by the propulsion plant.

4.4 Protection and operational stability

The required protection criteria are defined in Annex A.

Shutdowns of the system shall be avoided as far as possible.

The control system shall be able to control the propulsion system under all weather and manoeuvring conditions.

Documents
Document Sharing Hub
Full document details: BS IEC 60092-501:2013