BS IEC 60095-2:2021

BSI Standards Publication

Lead-acid starter batteries

Part 2: Dimensions of batteries and dimensions and marking of terminals

Documents
Document Sharing Hub

Full document details: BS IEC 60095-2:2021

National foreword

This British Standard is the UK implementation of IEC 60095-2:2021.

The UK participation in its preparation was entrusted to Technical Committee PEL/21, Secondary cells and batteries.

A list of organizations represented on this committee can be obtained on request to its committee manager.

Contractual and legal considerations

This publication has been prepared in good faith, however no representation, warranty, assurance or undertaking (express or implied) is or will be made, and no responsibility or liability is or will be accepted by BSI in relation to the adequacy, accuracy, completeness or reasonableness of this publication. All and any such responsibility and liability is expressly disclaimed to the full extent permitted by the law.

This publication is provided as is, and is to be used at the recipient's own risk.

The recipient is advised to consider seeking professional guidance with respect to its use of this publication.

This publication is not intended to constitute a contract. Users are responsible for its correct application.

© The British Standards Institution 2021
Published by BSI Standards Limited 2021

ISBN 978 0 539 05056 1

ICS 29.220.20; 43.040.10

Compliance with a British Standard cannot confer immunity from legal obligations.

This British Standard was published under the authority of the Standards Policy and Strategy Committee on 31 August 2021.

Amendments/corrigenda issued since publication

Date	Text affected

Documents
Document Sharing Hub

Full document details: BS IEC 60095-2:2021

IEC 60095-2

Edition 5.0 2021-08

INTERNATIONAL STANDARD

colour inside

Lead-acid starter batteries –
Part 2: Dimensions of batteries and dimensions and marking of terminals

INTERNATIONAL
ELECTROTECHNICAL
COMMISSION

ICS 29.220.20; 43.040.10

ISBN 978-2-8323-0000-8

Warning! Make sure that you obtained this publication from an authorized distributor.

® Registered trademark of the International Electrotechnical Commission

Documents
Document Sharing Hub

Full document details: BS IEC 60095-2:2021

CONTENTS

FOREWORD 5
1 Scope 7
2 Normative references 7
3 Terms and definitions 7
4 General requirements 8
4.1 General 8
4.2 Marking 8
4.2.1 Safety labelling 8
4.2.2 Marking of the polarity of terminals 8
4.3 Recycling 9
4.3.1 Recycling of lead 9
4.3.2 Recycling of plastic material 9
4.4 Dimensions and design 9
4.5 Dimensions of tapered battery terminals 9
5 Recommended types used in Europe (EU) 10
5.1 General 10
5.2 Main dimensions of batteries 10
5.3 Handles 14
5.3.1 General 14
5.3.2 Mounting of handles 14
5.4 Mounting of batteries 15
5.4.1 General 15
5.4.2 Dimensions and arrangement of ledges and notches 15
5.5 Terminals 16
5.5.1 Position of terminals 16
5.5.2 Dimensions of battery terminals 16
5.5.3 Marking of polarity 16
5.6 Special features of the battery lid 17
5.6.1 General 17
5.6.2 Semi bloc lid 17
5.6.3 Central degassing 17
5.6.4 Recessed holes 17
5.6.5 Removable cell plugs 18
5.6.6 Position of sensor openings 18
5.7 Handling of starter batteries by robot-equipment 19
5.8 Bulging and reinforcement of battery side walls 21
6 Other battery types used in Europe (EU) 22
6.1 General 22
6.2 Main dimensions of batteries 23
6.3 Handles 28
6.4 Mounting of batteries 28
6.4.1 General 28
6.4.2 Dimensions and arrangement of ledges and notches 28
6.5 Terminals 28
6.5.1 Position of terminals 28
6.5.2 Dimensions of battery terminals 28

AVA Documents
Document Sharing Hub

6.5.3 Marking of polarity 28
6.6 Handling of starter batteries by robot-equipment 28
7 Recommended types used in North America (AM) 31
7.1 General 31
7.2 Terminals and terminal configuration 31
7.2.1 Tapered terminals 31
7.2.2 Side terminals 31
7.2.3 Terminal configuration 32
7.3 Standard fastening on the bottom 32
7.3.1 General 32
7.3.2 Design of ledges 32
7.3.3 Design of recesses 33
7.4 Main dimensions of the battery group sizes AM 37
8 Recommended types used in East Asia (AS) 42
8.1 General 42
8.2 Terminals and terminal configuration 42
8.2.1 Design of terminals 42
8.2.2 Dimensions and classification of terminals 42
8.2.3 Configuration of terminals 42
8.3 Main dimensions of the battery group sizes AS 42

Figure 1 – Marking of polarity 8
Figure 2 – Marking of polypropylene-polyethylene copolymer battery components 9
Figure 3 – Dimensions of positive (on the right) and negative (on the left) terminal 10
Figure 4 – Main dimensions of batteries of standard series LN and LBN – Top view 11
Figure 5 – Details of Figure 4 12
Figure 6 – Main dimensions of batteries of standard series LN – Front view 13
Figure 7 – Main dimensions of batteries of standard series LN – Side view 14
Figure 8 – Details of ledges of Figure 6 and Figure 7 16
Figure 9 – Detail X – Notch on ledge 16
Figure 10 – Degassing outlet 17
Figure 11 – Recessed holes "M" for optional terminal protection 18
Figure 12 – Removable cell plugs and sensor positions 19
Figure 13 – Grips for handling by robot equipment 20
Figure 14 – Section P-P of Figure 13 and Figure 22 20
Figure 15 – Detail U of Figure 13 and Figure 22 21
Figure 16 – Maximum allowed bulging on short sides 21
Figure 17 – Reinforcement by thicker walls on short sides 22
Figure 18 – Reinforcement by additional ribs on short sides 22
Figure 19 – Main dimensions of batteries of series L, LB, E, EB 26
Figure 20 – Main dimensions of batteries of series LS, LBS, ES, EBS 27
Figure 21 – Details of Figure 19 and Figure 20 27
Figure 22 – Grips for handling by robot equipment for LBN series 29
Figure 23 – Grips for handling by robot equipment for L and LS series 29
Figure 24 – Detail V of Figure 23 30

AVA Documents
Document Sharing Hub

Full document details: BS IEC 60095-2:2021

Figure 25 – Grips for handling by robot equipment for LB and LBS series – Option 1 30
Figure 26 – Grips for handling by robot equipment for LB and LBS series – Option 2 30
Figure 27 – Detail Y of Figure 25 and Figure 26 31
Figure 28 – Side terminal groove description 32
Figure 29 – Side terminal groove dimensions in mm and (in) 32
Figure 30 – Design for batteries with ledges on long sides for hold-down-devices in mm and (in) 33
Figure 31 – Design for batteries with recesses on long sides for hold-down-devices in mm and (in) 34
Figure 32 – Design for batteries with recesses on sides for hold-down-devices in mm and (in) 35
Figure 33 – Design for batteries with recesses on sides for hold-down-devices in mm and (in) 36
Figure 34 – Design for batteries with recesses on sides for hold-down-devices in mm and (in) 37
Figure 35 – Main dimensions of batteries of group sizes 24R, 26R, 34R, 35, 51R, 85 39
Figure 36 – Main dimensions of batteries of group size 24, 25, 26, 27, 34, 51, 86 39
Figure 37 – Main dimensions of batteries of group size 36R 40
Figure 38 – Main dimensions of batteries of group sizes 59, 65 40
Figure 39 – Main dimensions of batteries of group size 75, 78,100 with positive terminal on the right 41
Figure 40 – Main dimensions of batteries of group size 75, 78,100 with positive terminal on the left 41
Figure 41 – Main dimensions of battery group sizes AS 43

Table 1 – Main dimensions of batteries of standard series LN 11
Table 2 – Main dimensions of batteries of other series LBN 23
Table 3 – Main dimensions of other series L, LS, LB and LBS 24
Table 4 – Main dimensions of other series E, ES, EB and EBS 25
Table 5 – Battery group sizes AM 38
Table 6 – Dimensions and classification of terminals 42
Table 7 – Dimensions of group sizes AS 43

Documents
Document Sharing Hub
Full document details: BS IEC 60095-2:2021

INTERNATIONAL ELECTROTECHNICAL COMMISSION

LEAD-ACID STARTER BATTERIES –

Part 2: Dimensions of batteries and dimensions and marking of terminals

FOREWORD

1) The International Electrotechnical Commission (IEC) is a worldwide organization for standardization comprising all national electrotechnical committees (IEC National Committees). The object of IEC is to promote international co-operation on all questions concerning standardization in the electrical and electronic fields. To this end and in addition to other activities, IEC publishes International Standards, Technical Specifications, Technical Reports, Publicly Available Specifications (PAS) and Guides (hereafter referred to as "IEC Publication(s)"). Their preparation is entrusted to technical committees; any IEC National Committee interested in the subject dealt with may participate in this preparatory work. International, governmental and non-governmental organizations liaising with the IEC also participate in this preparation. IEC collaborates closely with the International Organization for Standardization (ISO) in accordance with conditions determined by agreement between the two organizations.
2) The formal decisions or agreements of IEC on technical matters express, as nearly as possible, an international consensus of opinion on the relevant subjects since each technical committee has representation from all interested IEC National Committees.
3) IEC Publications have the form of recommendations for international use and are accepted by IEC National Committees in that sense. While all reasonable efforts are made to ensure that the technical content of IEC Publications is accurate, IEC cannot be held responsible for the way in which they are used or for any misinterpretation by any end user.
4) In order to promote international uniformity, IEC National Committees undertake to apply IEC Publications transparently to the maximum extent possible in their national and regional publications. Any divergence between any IEC Publication and the corresponding national or regional publication shall be clearly indicated in the latter.
5) IEC itself does not provide any attestation of conformity. Independent certification bodies provide conformity assessment services and, in some areas, access to IEC marks of conformity. IEC is not responsible for any services carried out by independent certification bodies.
6) All users should ensure that they have the latest edition of this publication.
7) No liability shall attach to IEC or its directors, employees, servants or agents including individual experts and members of its technical committees and IEC National Committees for any personal injury, property damage or other damage of any nature whatsoever, whether direct or indirect, or for costs (including legal fees) and expenses arising out of the publication, use of, or reliance upon, this IEC Publication or any other IEC Publications.
8) Attention is drawn to the Normative references cited in this publication. Use of the referenced publications is indispensable for the correct application of this publication.
9) Attention is drawn to the possibility that some of the elements of this IEC Publication may be the subject of patent rights. IEC shall not be held responsible for identifying any or all such patent rights.

International Standard IEC 60095-2 has been prepared by IEC technical committee 21: Secondary cells and batteries.

This fifth edition cancels and replaces the fourth edition published in 2009. This edition constitutes a technical revision.

This edition includes the following significant technical changes with respect to the previous edition:

a) update of the dimensions of batteries:
   - in Europe according to the last version of the European standard;
   - in USA with figures updated;
   - in Asia with one type of Japanese battery removed.

Documents
Document Sharing Hub

Full document details: BS IEC 60095-2:2021

The text of this International Standard is based on the following documents:

FDIS	Report on voting
21/1086/FDIS	21/1092/RVD

Full information on the voting for its approval can be found in the report on voting indicated in the above table.

The language used for the development of this International Standard is English.

This document was drafted in accordance with ISO/IEC Directives, Part 2, and developed in accordance with ISO/IEC Directives, Part 1 and ISO/IEC Directives, IEC Supplement, available at www.iec.ch/members_experts/refdocs. The main document types developed by IEC are described in greater detail at www.iec.ch/standardsdev/publications.

A list of all parts in the IEC 60095 series, published under the general title *Lead-acid starter batteries*, can be found on the IEC website.

The committee has decided that the contents of this document will remain unchanged until the stability date indicated on the IEC website under webstore.iec.ch in the data related to the specific document. At this date, the document will be

- reconfirmed,
- withdrawn,
- replaced by a revised edition, or
- amended.

IMPORTANT – The 'colour inside' logo on the cover page of this publication indicates that it contains colours which are considered to be useful for the correct understanding of its contents. Users should therefore print this document using a colour printer.

Documents
Document Sharing Hub

Full document details: BS IEC 60095-2:2021

LEAD-ACID STARTER BATTERIES –

Part 2: Dimensions of batteries and dimensions and marking of terminals

1 Scope

This part of IEC 60095 is applicable to lead-acid batteries used for starting, lighting and ignition of passenger cars and light vehicles with a nominal voltage of 12 V.

All batteries in accordance with this document can be fastened to the vehicle either by means of the ledges around the container or by means of a hold-down device engaging with the lid.

This document specifies dimensions of battery for Europe, East Asia and North America.

2 Normative references

The following documents are referred to in the text in such a way that some or all of their content constitutes requirements of this document. For dated references, only the edition cited applies. For undated references, the latest edition of the referenced document (including any amendments) applies.

IEC 60050-482, *International Electrotechnical Vocabulary – Part 482: Primary and secondary cells and batteries*

IEC 60095-1:2018, *Lead-acid starter batteries – Part 1: General requirements and methods of test*

IEC 60417:2002 , *Graphical symbols for use on equipment*

ISO/IEC 10646, *Information technology – Universal coded character set (UCS)*

ISO 1043-1, *Plastics – Symbols and abbreviated terms – Part 1: Basic polymers and their special characteristics*

ISO 11469, *Plastics – Generic identification and marking of plastics products*

3 Terms and definitions

For the purpose of this document, the terms and definitions given in IEC 60050-482 apply.

ISO and IEC maintain terminological databases for use in standardization at the following addresses:

- IEC Electropedia: available at http://www.electropedia.org/
- ISO Online browsing platform: available at http://www.iso.org/obp

Documents
Document Sharing Hub

Full document details: BS IEC 60095-2:2021

4 General requirements

4.1 General

The specifications of Clause 4 are common to all starter batteries according to this document.

4.2 Marking

4.2.1 Safety labelling

The batteries shall bear the six coloured safety symbols in accordance with 6.1.6 of IEC 60095-1:2018.

4.2.2 Marking of the polarity of terminals

4.2.2.1 General

The batteries shall carry the marking of polarity, at least of the positive terminal.

4.2.2.2 Marking of positive terminals

This marking shall take the form of the symbol "+" either on the upper surface of the positive terminal or on the lid adjacent to the positive terminal.

4.2.2.3 Marking of negative terminals

This marking shall take the form of the symbol "–" either on the upper surface of the negative terminal or on the lid adjacent to the negative terminal.

4.2.2.4 Design and dimensions of marking of terminals

The symbols used for marking the terminals shall be in accordance with IEC 60417-5005:2012-10 for the positive and IEC 60417-5006:2012-10 for the negative polarity.

The dimensions of the marking shall be according to Figure 1.

Dimensions in millimetres

Figure 1 – Marking of polarity

The polarity symbols may be either indented or embossed by (0,4 ± 0,1) mm.

As an alternative, the wordings "POS" and "NEG" are permitted for the North American market only.

AVA Documents
Document Sharing Hub

4.3 Recycling

4.3.1 Recycling of lead

The batteries shall be marked with the symbols for recycling and separate collection according to IEC 60095-1.

4.3.2 Recycling of plastic material

Injection moulded battery components need to be marked according to ISO 11469 and ISO 1043-1. The marking shall be placed on the bottom of the battery container or on one short side near the ledge.

According to ISO 11469 and ISO 1043-1 the minimum marking for polypropylene-polyethylene copolymer is >PP< or >PP/PE<.

In addition it is possible to show the recycling symbol with number 7 (Unicode character 'RECYCLING SYMBOL FOR TYPE-7 PLASTICS' (U+2679) according to ISO/IEC 10646) and the term "Other".

The recommended thickness is (0,3 ± 0,1) mm. The height of the marking characters shall be between 3 mm and 7 mm.

An example for this marking is shown in Figure 2.

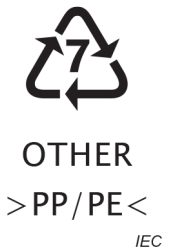

Figure 2 – Marking of polypropylene-polyethylene copolymer battery components

4.4 Dimensions and design

All dimensions given in this document correspond to a temperature of 20 °C of the polypropylene-polyethylene copolymer.

Details of the design that are not indicated in the generic drawings need to be chosen appropriately.

The generic drawings in this document are possible examples only. Especially the design of the lid, handles, ribs, ledges and vent caps are not mandatory in total.

4.5 Dimensions of tapered battery terminals

The dimensions of the tapered positive and negative terminal shall be according to Figure 3.

Documents
Document Sharing Hub
Full document details: BS IEC 60095-2:2021

Dimensions in millimetres

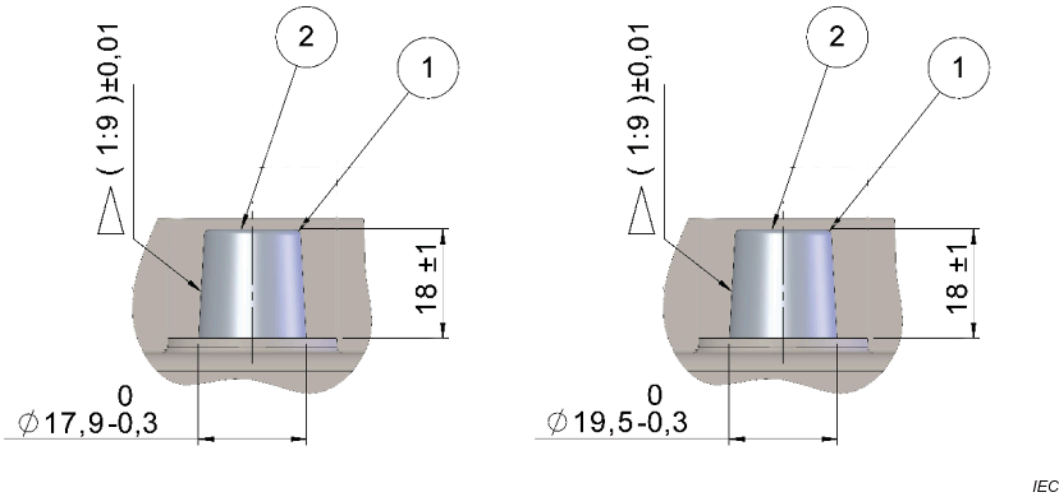

Key

1 Edge with radius

2 Convex or concave surface design permitted within height dimensions of (18 $^{+1}_{-2}$) mm related to the center of the terminal

Figure 3 – Dimensions of positive (on the right) and negative (on the left) terminal

5 Recommended types used in Europe (EU)

5.1 General

For new battery developments, only the recommended series shall be used.

Clause 5 specifies:

– the main dimensions of starter batteries of the preferred LN series;
– the location of the positive and negative terminals with respect to the fastening system;
– the dimensions of tapered terminals of starter batteries.

5.2 Main dimensions of batteries

The main dimensions of the batteries of the LN series are shown in Table 1 and Figure 4, Figure 5, Figure 6 and Figure 7.

NOTE The schematic drawings do not show every design detail of the battery.

The following symbols are used:

a_1 Overall length at the battery base with ledges

a_2 Length at the battery base without ledges

a_3 Length at battery lid

a_4 Distance of the inside notches

a_5 Distance between terminal and the edges of the lid at the short side (see Figure 4 and Figure 6)

a_6 Distance of the grip-segments for handling by robot equipment (see Figure 14)

AVA Documents Document Sharing Hub

A Position of optional sensors (see Figure 13)

B Position of optional sensors (see Figure 13)

H Overall height including lid and plugs

h Height of the top clamping area supporting the hold-down device

Table 1 – Main dimensions of batteries of standard series LN

Dimensions in millimetres

Type	a_1	a_2	a_3	a_4	a_5	a_6	*A*	*B*	*H*	*h*
	+0 / −2	± 1	+0 / −3	+0 / −1	± 2	± 2	± 2	± 2	+0 / −3	+0 / −4
LN 0	175	161	175	40	19	79	13	40	190	168
LN 1	207	193	207	40	24	95	18	48		
LN 2	242	228	242	40	26	113	19	57		
LN 3	278	264	277	40	29	130	27	65		
LN 4	315	301	314	40	31	150	27	74		
LN 5	353	339	352	60	27	168	28	84		
LN 6	394	379	393	60	30	187	31	94		

Dimensions in millimetres

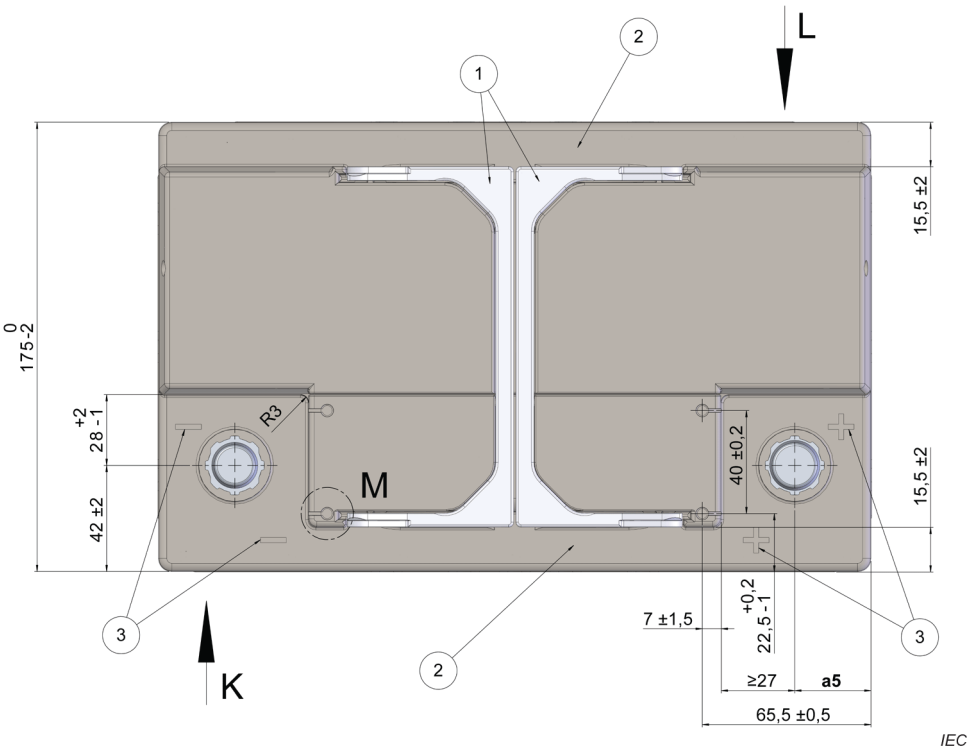

Key

1 Handles shown as example only

2 Top clamping area for fastening

3 Polarity markings

Figure 4 – Main dimensions of batteries of standard series LN and LBN – Top view

AVA Documents Document Sharing Hub

Full document details: BS IEC 60095-2:2021

Dimensions in millimetres

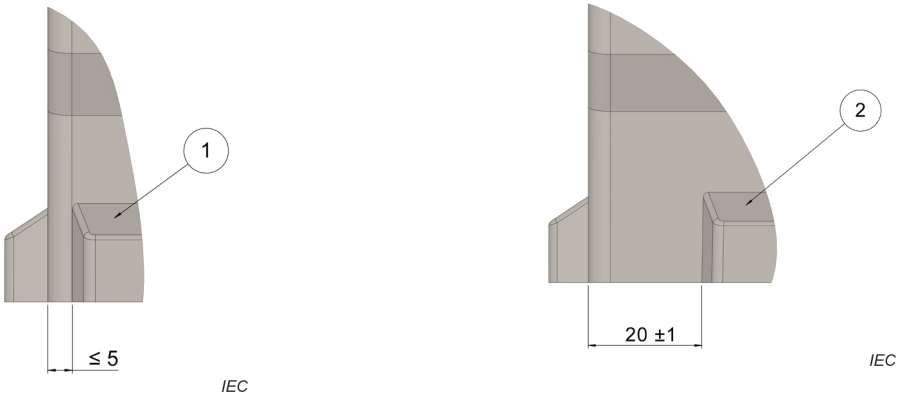

a) Detail K **b) Detail L**

Key

1 Ledge on battery front side

2 Ledge on battery back side

Figure 5 – Details of Figure 4

Documents
Document Sharing Hub
Full document details: BS IEC 60095-2:2021