BS IEC 60115-4:2022

BSI Standards Publication

Fixed resistors for use in electronic equipment

Part 4: Sectional specification: Power resistors for through hole assembly on circuit boards (THT) or for assembly on chassis

Documents
Document Sharing Hub

Full document details: BS IEC 60115-4:2022

National foreword

This British Standard is the UK implementation of IEC 60115-4:2022. It supersedes BS QC 400200:1993, which is withdrawn.

The UK participation in its preparation was entrusted to Technical Committee W/-, Consumer Products and Services Sector Policy and Strategy Committee.

A list of organizations represented on this committee can be obtained on request to its committee manager.

Contractual and legal considerations

This publication has been prepared in good faith, however no representation, warranty, assurance or undertaking (express or implied) is or will be made, and no responsibility or liability is or will be accepted by BSI in relation to the adequacy, accuracy, completeness or reasonableness of this publication. All and any such responsibility and liability is expressly disclaimed to the full extent permitted by the law.

This publication is provided as is, and is to be used at the recipient's own risk.

The recipient is advised to consider seeking professional guidance with respect to its use of this publication.

This publication is not intended to constitute a contract. Users are responsible for its correct application.

© The British Standards Institution 2023
Published by BSI Standards Limited 2023

ISBN 978 0 580 97369 7

ICS 31.040.10

Compliance with a British Standard cannot confer immunity from legal obligations.

This British Standard was published under the authority of the Standards Policy and Strategy Committee on 31 January 2023.

Amendments/corrigenda issued since publication

Date	Text affected

Documents
Document Sharing Hub

Full document details: BS IEC 60115-4:2022

IEC 60115-4

Edition 3.0 2022-11

INTERNATIONAL STANDARD

colour inside

Fixed resistors for use in electronic equipment – Part 4: Sectional specification: Power resistors for through hole assembly on circuit boards (THT) or for assembly on chassis

INTERNATIONAL
ELECTROTECHNICAL
COMMISSION

ICS 31.040.10

ISBN 978-2-8322-6088-3

Warning! Make sure that you obtained this publication from an authorized distributor.

® Registered trademark of the International Electrotechnical Commission

Documents
Document Sharing Hub

Full document details: BS IEC 60115-4:2022

This page is left deliberately blank.

Documents
Document Sharing Hub

CONTENTS

FOREWORD 8
1 Scope 11
2 Normative references 11
3 Terms, definitions, product types, product technologies and product classification 12
3.1 Terms and definitions 12
3.2 Product types 13
3.2.1 General 13
3.2.2 Axial type 13
3.2.3 Radial type 13
3.2.4 Vertical type 14
3.2.5 Tubular types 14
3.2.6 Metal housed wire-wound resistors 15
3.2.7 Any other type 15
3.3 Resistor encapsulation and material of termination 15
3.3.1 Conformal lacquer coat 15
3.3.2 Silicone cement coating 15
3.3.3 Enamel coating 16
3.3.4 Ceramic housed resistor 16
3.3.5 Wire termination 16
3.4 Product technologies 16
3.4.1 General 16
3.4.2 Metal film technology 17
3.4.3 Metal glaze technology 17
3.4.4 Metal oxide technology 17
3.4.5 Wire-wound technology 17
3.4.6 Metal strip technology 17
3.4.7 Any other technology 18
3.5 Product classification 18
4 Preferred characteristics 18
4.1 General 18
4.2 Preferred types, styles and dimensions 18
4.2.1 Axial type 18
4.2.2 Ceramic housed type with axial lead wires 22
4.2.3 Ceramic housed type with radial lead wires 23
4.2.4 Radial or vertical ceramic housed type and dimensions 25
4.2.5 Tubular type of power resistors 26
4.2.6 Other types 27
4.3 Preferred climatic categories 27
4.4 Resistance 28
4.5 Tolerances on resistance 28
4.6 Rated dissipation P_r 28
4.7 Limiting element voltage U_{max} 30
4.8 Insulation voltage U_{ins} 30
4.9 Insulation resistance R_{ins} 30
5 Tests and test severities 30
5.1 General provisions for tests invoked by this specification 30

AVA Documents
Document Sharing Hub
Full document details: BS IEC 60115-4:2022

5.2 Preparation of specimen ... 31
5.2.1 Drying ... 31
5.2.2 Mounting of power resistors on test boards ... 31
5.2.3 Mounting of power resistors on test racks ... 32
5.2.4 Specification of test boards/ racks for any other type of high-power resistors ... 34
5.3 Details of applicable tests ... 34
5.3.1 Resistance ... 34
5.3.2 Temperature coefficient of resistance ... 34
5.3.3 Temperature rise ... 35
5.3.4 Endurance at the rated temperature 70 °C ... 35
5.3.5 Endurance at room temperature ... 36
5.3.6 Endurance at a maximum temperature: UCT with category dissipation ... 37
5.3.7 Short-term overload ... 37
5.3.8 Single-pulse high-voltage overload test ... 38
5.3.9 Periodic-pulse high-voltage overload test ... 38
5.3.10 Visual examination ... 40
5.3.11 Gauging of dimensions ... 40
5.3.12 Detail dimensions ... 41
5.3.13 Robustness of the resistor body ... 41
5.3.14 Robustness of terminations ... 41
5.3.15 Bump ... 42
5.3.16 Shock ... 42
5.3.17 Vibration ... 42
5.3.18 Rapid change of temperature ... 43
5.3.19 Rapid change of temperature, ≥ 100 cycles ... 43
5.3.20 Climatic sequence ... 43
5.3.21 Damp heat, steady state ... 44
5.3.22 Solderability, with lead-free solder ... 45
5.3.23 Solderability, with SnPb solder ... 46
5.3.24 Resistance to soldering heat ... 46
5.3.25 Solvent resistance ... 47
5.3.26 Insulation resistance ... 47
5.3.27 Voltage proof ... 47
5.4 Optional and/or additional tests ... 48
5.4.1 Single-pulse high-voltage overload test ... 48
5.4.2 Periodic-pulse overload test ... 48
5.4.3 Electrostatic discharge (ESD) ... 49
5.4.4 Robustness of threaded stud or screw terminations ... 49
5.4.5 Operation at low temperature ... 50
5.4.6 Damp heat, steady state, accelerated ... 50
5.4.7 Accidental overload test ... 51
5.4.8 Flammability ... 51
6 Performance requirements ... 52
6.1 General ... 52
6.2 Limits for change of resistance at test ... 52
6.3 Temperature coefficient of resistance ... 54
6.4 Temperature rise ... 54
6.5 Visual inspection ... 55

AVA Documents
Document Sharing Hub
Full document details: BS IEC 60115-4:2022

6.5.1 General visual criteria ... 55
6.5.2 Visual criteria after tests ... 55
6.5.3 Visual criteria for the packaging ... 55
6.6 Solderability ... 55
6.7 Insulation resistance ... 56
6.8 Flammability ... 56
6.9 Accidental overload test ... 56
7 Marking, packaging and ordering information ... 56
7.1 Marking of the component ... 56
7.2 Packaging ... 56
7.3 Marking of the packaging ... 57
7.4 Ordering information ... 57
8 Detail specifications ... 57
8.1 General ... 57
8.2 Information to be specified in a detail specification ... 58
8.2.1 Outline drawing or illustration ... 58
8.2.2 Type, style, and dimensions ... 58
8.2.3 Climatic category ... 58
8.2.4 Resistance range ... 58
8.2.5 Tolerances on rated resistance ... 58
8.2.6 Rated dissipation P_{70} ... 58
8.2.7 Limiting element voltage U_{max} ... 59
8.2.8 Insulation voltage U_{ins} ... 59
8.2.9 Insulation resistance R_{ins} ... 59
8.2.10 Tests and test severities ... 59
8.2.11 Limits of resistance change after testing ... 59
8.2.12 Temperature coefficient of resistance ... 59
8.2.13 Marking ... 59
8.2.14 Ordering information ... 59
8.2.15 Mounting ... 59
8.2.16 Storage ... 60
8.2.17 Transportation ... 60
8.2.18 Additional information ... 60
8.2.19 Quality assessment procedures ... 60
9 Quality assessment procedures ... 60
9.1 General ... 60
9.2 Definitions ... 60
9.2.1 Primary stage of manufacture ... 60
9.2.2 Structurally similar components ... 60
9.2.3 Assessment level EZ ... 61
9.3 Formation of inspection lots ... 61
9.4 Approved component (IECQ AC) procedures ... 62
9.5 Qualification approval (QA) procedures ... 62
9.5.1 General ... 62
9.5.2 Qualification approval ... 62
9.5.3 Quality conformance inspection ... 62
9.6 Capability certification (IECQ AC-C) procedures ... 63
9.7 Technology certification (IECQ-AC-TC) procedures ... 63

AVA Documents
Document Sharing Hub
Full document details: BS IEC 60115-4:2022

9.8 Periodical evaluation of termination platings ... 63
9.9 Delayed delivery ... 63
9.10 Certified test records ... 63
9.11 Certificate of conformity (CoC) ... 63
Annex A (normative) Symbols and abbreviated terms ... 74
A.1 Symbols ... 74
A.2 Abbreviated terms ... 77
Annex B (normative) Visual inspection acceptance criteria ... 79
B.1 General ... 79
B.2 Acceptance criteria for a general visual inspection of body of specimens ... 79
B.3 Acceptance criteria for a general visual inspection of the terminals ... 79
B.4 Acceptance criteria for a general visual inspection of specimen after test ... 79
Annex C (normative) Workmanship requirements for the assembly of power resistors ... 80
C.1 General ... 80
C.2 Lead forming ... 80
C.2.1 General ... 80
C.2.2 Means for support of mounting height ... 81
C.3 Mounting ... 82
C.3.1 General ... 82
C.3.2 Lateral mounting ... 83
C.3.3 Upright mounting ... 84
C.4 Lead trimming ... 85
Annex D (informative) Zero ohm resistors (jumpers) ... 87
Annex E (informative) Guide on the application of optional and/or additional tests ... 88
E.1 General ... 88
E.2 Endurance at room temperature ... 88
E.3 Single-pulse high-voltage overload test ... 89
E.4 Periodic-pulse overload test ... 90
E.5 Operation at low temperature ... 91
E.6 Damp heat, steady state, accelerated ... 92
E.7 Accidental overload test ... 93
E.8 Flammability test ... 94
E.9 Electrostatic discharge test (ESD) ... 95
E.10 Robustness of threaded stud or screw terminations ... 96
Annex F (informative) Radial formed types from axial styles ... 98
F.1 General ... 98
F.1.1 Applicability of this annex ... 98
F.1.2 Denomination of radial formed styles ... 98
F.1.3 Coated lead wires ... 100
F.1.4 Means for support of mounting height ... 100
F.1.5 Means for retention ... 101
F.2 Radial formed types for through hole assembly ... 101
F.2.1 Radial formed style with lateral body position ... 101
F.2.2 Radial formed style with upright body position ... 103
F.3 Radial formed types for surface-mount assembly ... 105
F.4 Packaging ... 106
F.4.1 Packaging of resistors formed for through-hole assembly ... 106
F.4.2 Packaging of resistors formed for surface-mount assembly ... 107

AVA Documents
Document Sharing Hub
Full document details: BS IEC 60115-4:2022

F.5 Quality assessment 107
F.5.1 General 107
F.5.2 Quality assessment of formed resistors 107
F.5.3 Forming of finished resistors of assessed quality 108
F.5.4 Special inspection requirements 108
Annex X (informative) Cross references for the prior revision of this specification 109
Bibliography 112

Figure 1 – Illustrations of typical axial leaded power resistors 13
Figure 2 – Illustrations of typical radial leaded power resistors 13
Figure 3 – Illustrations of typical vertical leaded power resistors with punched terminals 14
Figure 4 – Illustrations of typical tubular type power resistors 14
Figure 5 – Illustrations of typical metal housed power resistors 15
Figure 6 – Shape and dimensions of cylindrical axial leaded resistors 19
Figure 7 – Alternative methods for specification of the length of excessive protective coating or welding beads on axial leaded resistors 20
Figure 8 – Lead-wire spacing of axial leaded resistors with bent leads 21
Figure 9 – Specification of the lead eccentricity of axial leaded resistors 22
Figure 10 – Shape and dimensions of axial leaded ceramic housed resistors 22
Figure 11 – Shape and dimensions of radial type ceramic resistors 24
Figure 12 – Shape and dimensions of radial leaded ceramic resistors 25
Figure 13 – Shape and dimensions of tubular resistors 26
Figure 14 – Typical derating curve for MET > UCT 29
Figure 15 – Typical derating curve for power wire-wound resistors 29
Figure 16 – Assembly of specimen to the test board 32
Figure 17 – Mounting of axial leaded specimens on a rack, top view 33
Figure 18 – Examples of specimen lead fixation devices 34
Figure C.1 – Lead forming dimensions 80
Figure C.2 – Examples of mounting height support 82
Figure C.3 – Clearance between coating and solder 83
Figure C.4 – Lateral mounting 83
Figure C.5 – Upright mounting 84
Figure C.6 – Lead protrusion 85
Figure C.7 – Lead end distortion 86
Figure F.1 – Production flow and different scopes of quality assurance 99
Figure F.2 – Shape and dimensions of radial formed resistor for lateral body position 101
Figure F.3 – Shape and dimensions of radial formed resistor for lateral body position with kinked lead wires 101
Figure F.4 – Shape and dimensions of radial formed resistor for upright body position 103
Figure F.5 – Shape and dimensions of radial formed resistor for upright body position and wide spacing 103
Figure F.6 – Shape and dimensions of radial formed resistor for upright body position and wide spacing, with kinked lead wire 104
Figure F.7 – Shape and dimensions of radial formed resistor for surface-mount assembly (Z-bend) 105

Documents
Document Sharing Hub
Full document details: BS IEC 60115-4:2022

Figure F.8 – Land pattern dimensions for surface-mount assembly 106

Table 1 – Examples of preferred styles of cylindrical axial leaded power resistors 19
Table 2 – Examples of preferred styles of axial leaded ceramic housed resistors 23
Table 3 – Examples of preferred styles of radial type ceramic resistors 24
Table 4 – Preferred styles of radial or vertical mount ceramic resistors 26
Table 5 – Example of preferred styles of tubular types of power resistors 27
Table 6 – Preferred alternative overload conditions 40
Table 7 – Limits for resistance variations at tests 53
Table 8 – Permitted change of resistance due to the temperature coefficient of resistance 54
Table 9 – Test schedule for the qualification approval of power resistors 64
Table 10 – Test schedule for quality conformance inspection of power resistors 69
Table C.1 – Lead bend radius 81
Table C.2 – Recommended circuit board bore diameters 82
Table C.3 – Clearance of lateral mounted resistors 84
Table E.1 – Implementation of the test endurance at room temperature 89
Table E.2 – Implementation of the single-pulse high-voltage overload test 90
Table E.3 – Implementation of the periodic-pulse overload test 91
Table E.4 – Implementation of the operation at low temperature test 92
Table E.5 – Implementation of the test damp heat, steady state, accelerated 93
Table E.6 – Implementation of the test accidental overload test 94
Table E.7 – Implementation of the test flammability 95
Table E.8 – Implementation of the test Electrostatic discharge (ESD) 96
Table E.9 – Implementation of the test Robustness of threaded stud or screw terminations 97
Table F.1 – Feasible lead-wire spacing of radial formed resistor for lateral body position 102
Table F.2 – Feasible lead-wire spacing of radial formed resistor for upright body position 105
Table X.1 – Cross reference for references to clauses 110
Table X.2 – Cross reference for references to figures 111
Table X.3 – Cross reference for references to tables 111

Documents
Document Sharing Hub

Full document details: BS IEC 60115-4:2022

INTERNATIONAL ELECTROTECHNICAL COMMISSION

FIXED RESISTORS FOR USE IN ELECTRONIC EQUIPMENT –

Part 4: Sectional specification: Power resistors for through hole assembly on circuit boards (THT) or for assembly on chassis

FOREWORD

1) The International Electrotechnical Commission (IEC) is a worldwide organization for standardization comprising all national electrotechnical committees (IEC National Committees). The object of IEC is to promote international co-operation on all questions concerning standardization in the electrical and electronic fields. To this end and in addition to other activities, IEC publishes International Standards, Technical Specifications, Technical Reports, Publicly Available Specifications (PAS) and Guides (hereafter referred to as "IEC Publication(s)"). Their preparation is entrusted to technical committees; any IEC National Committee interested in the subject dealt with may participate in this preparatory work. International, governmental and non-governmental organizations liaising with the IEC also participate in this preparation. IEC collaborates closely with the International Organization for Standardization (ISO) in accordance with conditions determined by agreement between the two organizations.
2) The formal decisions or agreements of IEC on technical matters express, as nearly as possible, an international consensus of opinion on the relevant subjects since each technical committee has representation from all interested IEC National Committees.
3) IEC Publications have the form of recommendations for international use and are accepted by IEC National Committees in that sense. While all reasonable efforts are made to ensure that the technical content of IEC Publications is accurate, IEC cannot be held responsible for the way in which they are used or for any misinterpretation by any end user.
4) In order to promote international uniformity, IEC National Committees undertake to apply IEC Publications transparently to the maximum extent possible in their national and regional publications. Any divergence between any IEC Publication and the corresponding national or regional publication shall be clearly indicated in the latter.
5) IEC itself does not provide any attestation of conformity. Independent certification bodies provide conformity assessment services and, in some areas, access to IEC marks of conformity. IEC is not responsible for any services carried out by independent certification bodies.
6) All users should ensure that they have the latest edition of this publication.
7) No liability shall attach to IEC or its directors, employees, servants or agents including individual experts and members of its technical committees and IEC National Committees for any personal injury, property damage or other damage of any nature whatsoever, whether direct or indirect, or for costs (including legal fees) and expenses arising out of the publication, use of, or reliance upon, this IEC Publication or any other IEC Publications.
8) Attention is drawn to the Normative references cited in this publication. Use of the referenced publications is indispensable for the correct application of this publication.
9) Attention is drawn to the possibility that some of the elements of this IEC Publication may be the subject of patent rights. IEC shall not be held responsible for identifying any or all such patent rights.

IEC 60115-4 has been prepared by IEC technical committee 40: Capacitors and resistors for electronic equipment. It is an International Standard.

This third edition cancels and replaces the second edition published in 1982 and Amendment 1:1993. This edition constitutes a technical revision and includes test conditions and requirements for lead-free soldering and assessment procedures meeting the requirements of a "zero defect" approach.

This edition includes the following significant technical changes with respect to the previous edition:

a) the definitions of product technologies and product classification levels of the generic specification, IEC 60115-1:2020, have been adopted;
b) a basis for the optional specification of the lead eccentricity of axial leaded resistors has been amended in 4.2;

Documents
Document Sharing Hub
Full document details: BS IEC 60115-4:2022

c) the 'period-pulse high-voltage overload test' of IEC 60115-1:2020, 8.3 has been adopted as default test method in 5.3.9, thereby replacing the legacy test 'periodic-pulse overload test of IEC 60115-1:2020, 8.4;

d) the revised solderability test of IEC 60115-1:2020, 11.1 has been adopted in 5.3.22 and 5.3.23;

e) the combined solvent resistance test of IEC 60115-1:2020, 11.3 has been adopted in 5.3.25;

f) the 'endurance at room temperature test' of IEC 60115-1:2020, 7.2 has been reworked and adopted in 5.3.5;

g) the 'single-pulse high-voltage overload test' of IEC 60115-1:2020, 8.2, applied with the pulse shape 10/700 in 5.3.8, is complemented with the optional alternative provided by the pulse shape 1,2/50 in 5.4.1.

h) climatic tests for 'operation at low temperature' of IEC 60115 1:2020, 10.2, and for 'damp heat, steady state, accelerated' of IEC 60115-1:2020, 10.5, have been adopted as optional tests in 5.4.5. and 5.4.6, respectively;

i) inclusion of an optional flammability test as 5.4.8;

j) new guidance is provided in 6.2 on the presentation of stability requirements with their permissible absolute and relative deviations;

k) acceptance criteria for the visual inspection have been added in 6.5 and in Annex B;

l) visual inspection for the primary and proximity packaging has been added in 6.5.3 and in 7.2;

m) the periodical evaluation of termination platings has been added as a new topic of quality assessment in 9.8;

n) the revised test clause numbering of IEC 60115-1:2020 has been applied;

o) a new Annex C has been added to summarize workmanship requirements for the assembly of leaded power resistors, e.g. as given in the prior IEC 61192 series of standards;

p) the informative Annex F on radial formed styles has been amended with details on a formed Z-bend style for surface-mount assembly;

q) furthermore, the informative Annex X has been added to show the cross-references to the prior edition of this document.

The text of this International Standard is based on the following documents:

Draft	Report on voting
40/2920/CDV	40/2963/RVC

Full information on the voting for its approval can be found in the report on voting indicated in the above table.

The language used for the development of this International Standard is English.

A list of all parts in the IEC 60115 series, published under the general title *Fixed resistors for use in electronic equipment*, can be found on the IEC website.

This document was drafted in accordance with ISO/IEC Directives, Part 2, and developed in accordance with ISO/IEC Directives, Part 1 and ISO/IEC Directives, IEC Supplement, available at www.iec.ch/members_experts/refdocs. The main document types developed by IEC are described in greater detail at www.iec.ch/publications.

Documents
Document Sharing Hub

Full document details: BS IEC 60115-4:2022

The committee has decided that the contents of this document will remain unchanged until the stability date indicated on the IEC website under webstore.iec.ch in the data related to the specific document. At this date, the document will be

- reconfirmed,
- withdrawn,
- replaced by a revised edition, or
- amended.

IMPORTANT – The "colour inside" logo on the cover page of this document indicates that it contains colours which are considered to be useful for the correct understanding of its contents. Users should therefore print this document using a colour printer.

Documents
Document Sharing Hub

Full document details: BS IEC 60115-4:2022

FIXED RESISTORS FOR USE IN ELECTRONIC EQUIPMENT –

Part 4: Sectional specification: Power resistors for through hole assembly on circuit boards (THT) or for assembly on chassis

1 Scope

This part of IEC 60115 relates to resistors having a rated dissipation typically greater than 1 W up to and including 1 000 W for use in electronic equipment. This document is applicable to fixed power resistors with a maximum surface temperature (MET) higher than the preferred upper category temperature (UCT) of 200 °C.

NOTE Heat sink resistors, i.e. resistors which in their operation depend on being mounted on a dedicated heat sink, owing to their special temperature conditions, are covered by a special sectional specification (under consideration at the time of publication).

These resistors are typically described according to types (different geometric shapes) and styles (different dimensions), and product technology.

The resistive element of these resistors is typically

– protected by a conformal lacquer coating, or
– cement coating, or
– vitreous enamel, or
– a ceramic body, or
– any other housing, which is to be described in the relevant specification.

The electrical connection of these resistors is typically achieved by means of

– axial leads for through hole assembly (THT), or
– vertical or radial leads or punched terminals, or
– ferrules or lugs for chassis mount, or
– push on terminals, or
– screw terminals, or
– any other termination, which is to be described in the relevant specification.

In special cases, a heat sink can be applicable but not mandatory.

The object of this document is to define preferred ratings and characteristics and to select from IEC 60115-1 the appropriate quality assessment procedures, tests and measuring methods and to give general performance requirements for this type of resistor.

NOTE SMD resistors are covered by IEC 60115-8, regardless of their dissipation.

2 Normative references

The following documents are referred to in the text in such a way that some or all of their content constitutes requirements of this document. For dated references, only the edition cited applies. For undated references, the latest edition of the referenced document (including any amendments) applies.

IEC 60062:2016, *Marking codes for resistors and capacitors*

Documents
Document Sharing Hub

Full document details: BS IEC 60115-4:2022

IEC 60063:2015, *Preferred number series for resistors and capacitors*

IEC 60068-1:2013, *Environmental testing – Part 1: General and guidance*

IEC 60068-2-1, *Environmental testing – Part 2-1: Tests – Test A: Cold*

IEC 60068-2-2, *Basic environmental testing procedures – Part 2-2: Tests – Tests B: Dry heat*

IEC 60068-2-6:2007, *Environmental testing – Part 2-6: Tests – Test Fc: Vibration (sinusoidal)*

IEC 60068-2-20:2021, *Environmental testing – Part 2-20: Tests – Test Ta and Tb: Test methods for solderability and resistance to soldering heat of devices with leads*

IEC 60068-2-27, *Environmental testing – Part 2-27: Tests – Test Ea and guidance: Shock*

IEC 60068-2-47, *Environmental testing – Part 2-47: Tests – Mounting of specimens for vibration, impact and similar dynamic tests*

IEC 60115-1:2020, *Fixed resistors for use in electronic equipment – Part 1: Generic specification*

IEC 60115-2:—[1], *Fixed resistors for use in electronic equipment – Part 2: Sectional specification: Low power film resistors with leads for through-hole assembly on circuit boards (THT)*

IEC 60286-1, *Packaging of components for automatic handling – Part 1: Tape packaging of components with axial leads on continuous tapes*

IEC 60286-2, *Packaging of components for automatic handling – Part 2: Tape packaging of components with unidirectional leads on continuous tapes*

IEC 60294:2012, *Measurement of the dimensions of a cylindrical component with axial terminations*

IEC 60301, *Preferred diameters of wire terminations of capacitors and resistors*

IEC 61193-2:2007, *Quality assessment systems – Part 2: Selection and use of sampling plans for inspection of electronic components and packages*

3 Terms, definitions, product types, product technologies and product classification

3.1 Terms and definitions

For the purpose of this document, the terms and definitions given in IEC 60115-1:2020, 3.1, as well as the following, apply.

ISO and IEC maintain terminology databases for use in standardization at the following addresses:

- IEC Electropedia: available at https://www.electropedia.org/
- ISO Online browsing platform: available at https://www.iso.org/obp

[1] Under development. Stage at the time of publication: IEC TPUB 60115-2:2022.

Documents
Document Sharing Hub

Full document details: BS IEC 60115-4:2022

3.1.1
insulated resistor
resistor that is declared as being insulated by the relevant specification, which in order to support this has a specified insulating voltage and insulation resistance, and which is assessed for these properties with the suitable tests of this specification

[SOURCE: IEC 60115-1:2020, 3.1.7]

3.2 Product types

3.2.1 General

For each type of products there shall be detailed specifications describing the preferred technology and style of the products covered therein.

3.2.2 Axial type

Axial type designates the physical design of a component with leads for PCB mounting by bending and for through hole assembly (THT). The leads shall extend to both sides along the longitudinal axis of the components body. Figure 1 shows illustration of typical axial leaded power resistors.

a) Axial leaded power film resistor **b) Axial leaded wire wound resistor** **c) Axial leaded ceramic housed wire wound resistor** **d) Axial leaded low ohm resistor**

Figure 1 – Illustrations of typical axial leaded power resistors

Axial type resistors can be suitable for forming the leads to a radial assembly style if the leads are long enough; see Annex F.

3.2.3 Radial type

"Radial type" designates the physical design of a component with leads extending to one side along the diagonal axis of the component body for PCB mounting. The leads of power resistors typically originate from inside the component body. Bent versions of axial resistors made by forming of one or both leads can be used. Figure 2 shows illustration of typical radial leaded power resistors.

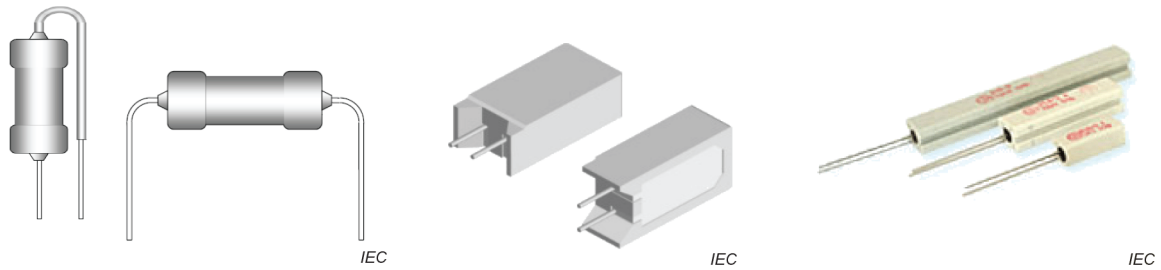

a) Radial formed axial type **b) Radial leaded resistor, film or wire wound, inside a ceramic housing** **c) Radial leaded resistor, typical wire wound**

Figure 2 – Illustrations of typical radial leaded power resistors

Documents
Document Sharing Hub
Full document details: BS IEC 60115-4:2022

Radial type resistors are typically suitable for direct assembly on a circuit board and can be suitable for automatic assembly if provided in a suitable packaging, e.g. taped according to IEC 60286-2. The mechanical stability of radial type power resistors on the circuit board may be based on specific features of the housing or on applied assembly parts.

3.2.4 Vertical type

"Vertical type" designates the physical design of a component with punched terminals extending to one side along the longitudinal axis of the component body for PCB mounting. The terminals typically originate from inside the component body. Figure 3 shows illustration of typical vertical leaded power resistors with punched terminals.

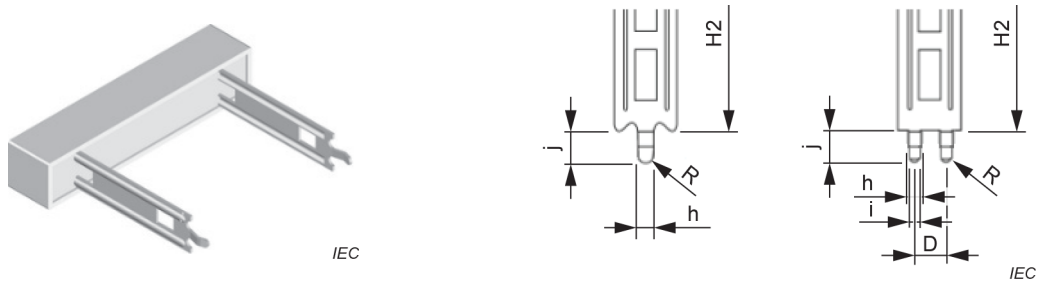

a) Vertical leaded power resistor, typical wire wound

b) Vertical leaded power resistor, typical solder areas

Figure 3 – Illustrations of typical vertical leaded power resistors with punched terminals

Vertical type resistors are typically suitable for direct assembly on a circuit board. The mechanical stability of radial type resistors on the circuit board are based on specific features of the punched terminals.

3.2.5 Tubular types

Tubular type designates the physical design of a component with the resistive element on the outside of a tubular ceramic body. A variety of different terminations styles is used, e.g. lugs for soldering, push-on terminals, or screw terminals. Figure 4 shows illustration of typical tubular type power resistors.

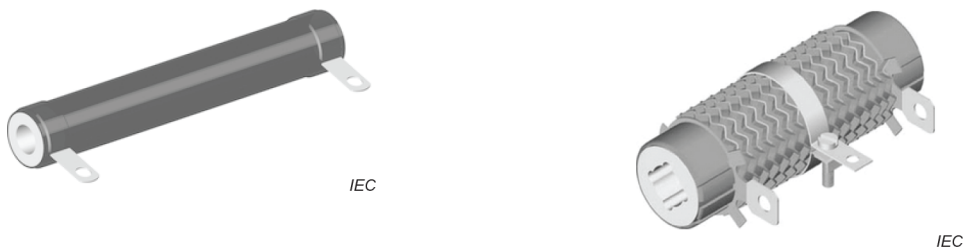

a) Tubular power wire wound resistor

b) Tubular power resistor high power – low ohm

Figure 4 – Illustrations of typical tubular type power resistors

Tubular type resistors are typically mounted on chassis or racks, using special mounting accessories. They are not suitable for direct assembly on a circuit board.

Documents
Document Sharing Hub
Full document details: BS IEC 60115-4:2022

3.2.6 Metal housed wire-wound resistors

Wire-wound resistors, wound, for example, on mica for a flat element and housed in a metal box for high temperature applications, made, for example, from aluminium. A variety of different terminations can be used, such as wire leads or insulated copper stranded wires. Figure 5 shows illustration of typical metal housed resistors.

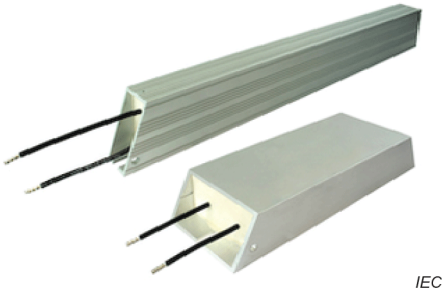

Figure 5 – Illustrations of typical metal housed power resistors

These resistors shall be usable without any heat sink.

3.2.7 Any other type

Any other type of power resistor falling within the scope of this sectional specification may be covered by a respective detail specification.

3.3 Resistor encapsulation and material of termination

3.3.1 Conformal lacquer coat

See IEC 60115-1:2020, 3.3.3, with the following details:

The conformal encapsulation of the resistor provides a protection against mechanical, electrical and climatic influences and withstands high temperature above 200 °C for a longer time.

Alternative designation: "conformal lacquer", "conformal coat", "conformal epoxy coat, conformal silicone coat".

The guaranteed protection against detrimental influences requires qualification for each considered risk with suitable tests and requirements.

Related terminology: "enamel coating", "silicone cement coating".

3.3.2 Silicone cement coating

See IEC 60115-1:2020, 3.3.4, with the following details:

Heat-resistant encapsulation of the resistor to provide protection against mechanical, electrical and climatic influences.

Alternative designation: "cement coating", "high-temperature cement coating".

The guaranteed protection against detrimental influences requires qualification for each considered risk with suitable tests and requirements.

Related terminology: "enamel coating", "conformal coating".

Documents
Document Sharing Hub

Full document details: BS IEC 60115-4:2022

3.3.3 Enamel coating

See IEC 60115-1:2020, 3.3.5, with the following details:

Vitreous encapsulation of the resistor, which is approximately conformal to the original shape of the resistor, which is produced by application and vitrification of several layers of aqueous frit, for providing a protection against mechanical, electrical and climatic influences

Alternative designation: "vitreous enamel coating"

The guaranteed protection against detrimental influences requires qualification for each considered risk with suitable tests and requirements.

Related terminology: "conformal coating".

3.3.4 Ceramic housed resistor

See IEC 60115-1:2020, 3.3.7, with the following details:

Resistors of various technologies which are potted with inorganic compounds into a ceramic body. The special inorganic potting compound and the ceramic case provide high thermal conductivity in a fireproof package

Alternative designation: "ceramic resistor", "cemented resistor", "potted resistor"

The guaranteed protection against detrimental influences requires qualification for each considered risk with suitable tests and requirements.

Related terminology: "silicone cement coating".

Alternative designation: "leaded resistor".

3.3.5 Wire termination

Resistors, having wire terminations may have any type of wire:

- round copper leads, bare or tin surface;
- copper cladded iron wire, bare or tin surface;
- round nickel wire, bare or tin surface;
- strand of copper filament, insulated;
- insulated by any polymer insulation material.

Alternative designation: "leaded resistor", "resistors with flexible leads".

3.4 Product technologies

3.4.1 General

The definitions of product technologies intend to provide the reader with a guidance on the variety of technologies used for the making of power resistors, and to aid their identification.

For the purposes of this document, the general description of the product technologies given in IEC 60115-1:2020, 3.2, as well as the following apply.

Documents
Document Sharing Hub

Full document details: BS IEC 60115-4:2022

3.4.2 Metal film technology

See IEC 60115-1:2020, 3.2.2, with the following details:

Metal film technology, if applied for power resistors, needs to be operated at maximum surface temperatures higher than 200 °C, for example at an MET of 225 °C. Typical metal film power resistors are conformal lacquer coated or housed in a ceramic case, where a focus is on the non-flammability of the employed materials.

If coding of the resistor technology is required, the character **M** shall be used to identify the metal film technology.

3.4.3 Metal glaze technology

See IEC 60115-1:2020, 3.2.3, with the following details:

Metal glaze power resistors need to be operated at maximum surface temperatures higher than 200 °C, for example at an MET of 225 °C. Typical metal glaze power resistors are conformal lacquer coated or housed in a ceramic case or moulded, where a focus is on the non-flammability of the employed materials.

If coding of the resistor technology is required, the character **G** shall be used to identify the metal glaze technology.

3.4.4 Metal oxide technology

See IEC 60115-1:2020, 3.2.4, with the following details:

Metal oxide technology, if applied for power resistors, is operated at maximum surface temperatures higher than 200 °C, for example at an MET of 250 °C. Typical metal oxide power resistors are conformal lacquer coated or housed in a ceramic case, where a focus is on the non-flammability of the employed materials.

If coding of the resistor technology is required, the character **X** shall be used to identify the metal oxide technology.

3.4.5 Wire-wound technology

See IEC 60115-1:2020, 3.2.8, with the following details:

Wire-wound resistors designed for the dissipation of high power are conformal lacquer coated or vitreous enamelled, or inserted into ceramic housings. Round resistive wire or flat resistive wire can be used. Focus is laid on the non-flammability of the employed materials because the resistors are typically operated at an MET higher than 250 °C.

Flat wire-wound resistors are wound on a mica carrier and housed in an aluminium case. Caution is required in the event of an overload because of the low melting temperature of the case material.

Where coding of the resistor technology is required, the character **W** shall be used to identify the wire-wound technology.

3.4.6 Metal strip technology

See IEC 60115-1:2020, 3.2.10, with the following details:

Documents
Document Sharing Hub

Full document details: BS IEC 60115-4:2022

Metal strip technology, if applied for power resistors with copper leads, is operated at maximum surface temperatures higher than 200 °C, for example at an MET of 250 °C. Typical metal strip power resistors are housed in a ceramic case.

Where coding of the resistor technology is required, the character **S** shall be used to identify the metal strip technology.

3.4.7 Any other technology

Some power resistors are based on technologies other than those described above. For such cases, the respective detail specification shall describe the applied technology together with its strengths and limitations.

Where coding of the resistor technology is required, the detail specification shall define an unambiguous code character to be used to identify the new resistor technology

3.5 Product classification

The introduction of a product classification permits the user to select performance requirements according to the conditions of the intended end-use application.

For the purposes of this document, the general description of the product classification as defined in IEC 60115-1:2020, 3.4, as well as the following apply.

The classification levels

- level G for general electronic equipment, or
- level P for high-performance electronic equipment, or
- level R for high-performance and highly reliable electronic equipment
  (minimum failure rate level E5 is requested)

can be used for resistors covered by this specification in order to tailor the scope and content of test schedules in line with the typical requirements of the application.

Such test schedules are suitable for the quality assessment of the resistors covered by this specification, for example through the IEC Quality Assessment System for Electronic Components (IECQ), where the single assessment level EZ should be applied. Assessment level EZ supports the zero-defect approach by setting the acceptance number to zero; see 9.2.3 and IEC 60115-1:2020, Q.1.3.3.

4 Preferred characteristics

4.1 General

The values given in detail specifications should be selected from the values given in 4.2 to 4.9.

4.2 Preferred types, styles and dimensions

4.2.1 Axial type

4.2.1.1 Preferred styles and outline dimensions

The shape and dimensions of axial leaded power resistors is shown in Figure 6, with preferred styles and their respective dimensions given in Table 1. Harmonized style designators of axial leaded resistors should start with **RA_**.

Documents
Document Sharing Hub

Full document details: BS IEC 60115-4:2022

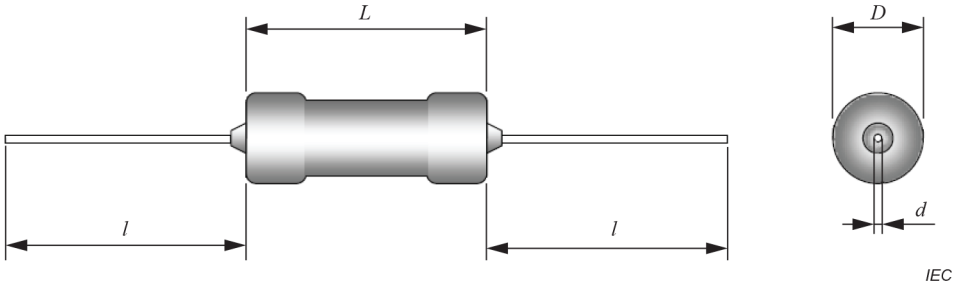

Figure 6 – Shape and dimensions of cylindrical axial leaded resistors

Table 1 – Examples of preferred styles of cylindrical axial leaded power resistors

Style[a]	Dimensions[f]			
	Body diameter D_{max}[c] mm	Body length L_{max}[b] mm	Lead diameter d_{max}[d] mm	Lead length l_{min}[e] mm
RA_0411	4,5	13,0	0,8	21
RA_0617	7,0	17,5	0,8	21
RA_0719	7,5	23,0	1,0	21
RA_0922	10,0	25,5	1,0	21
RA_0933	11,0	39,0	1,0	21
RA_0947	11,0	54,0	1,0	21

This table shows examples of popular styles of axial leaded power resistors with observed typical dimensions. The detail specification shall state the exact dimensions and respective tolerances for the range of styles covered therein.

[a] The style reference starts with the characters RA, representing Resistor, Axial .
The style reference is completed by a third character for the product technology, as given in 3.4:
M = metal film; G = metal glaze; X = metal oxide; W = wire-wound; S = metal strip.
The numerals indicate the dimensions of the resistor body, using 2 digits for the diameter D, followed by 2 digits for the length L, both given in millimetres.
Example for complete style references may be RAW0411 for an axial power wire-wound resistor.

[b] The body length of the resistor L shall be gauged in accordance with 5.3.11.

[c] The body diameter of the resistor D shall be gauged in accordance with 5.3.11.

[d] Nominal diameter of the lead wires d, with permissible tolerances according to IEC 60301.

[e] The minimum lead length l_{min} applies only to the free lead length in tape packaging according to IEC 60286-1.

[f] For products that have their origin in the imperial system of units, the inch dimensions can be given additionally for information, presented in square brackets

Table 1 presents recommendations for a harmonized system of style designations based on the width and length of the components. Other designations based on the power dissipation are commonly applied and should be completed with the RA_ prefix.

The detail specification shall present a realistic outline illustration of the resistors covered therein, which shall contain all relevant dimensions.

The detail specification can deviate from the preferred styles or their recommended dimensions given in Table 1, for example due to the specified power dissipation of the components or due to specific technical requirements, or due to deviating styles existing for legacy products.

Documents
Document Sharing Hub
Full document details: BS IEC 60115-4:2022

The recommendation for lead wire diameters in Table 1 applies to standard copper wires with a tin plating. The detail specification can state other wire materials and other wire diameters where this is justified by specific technical requirements or by a prior specification of a legacy product. Special attention is drawn to the impact of different wire materials or diameters on the thermal conductivity of the lead wires, which affects the thermal management of the products in their application situation. Therefore, a change of wire is likely to require an adaptation of the dissipation rating or of the limiting temperatures, and the dependent stability data of the affected product.

For the specification of any non-solderable area on the lead wires, for example due to excessive coating near the body, the provisions of 4.2.1.2 shall be applied.

For the specification of any lead wires' eccentricity, the provisions of 4.2.1.4 shall be applied.

4.2.1.2 Length of excessive coating or welding bead

The detail specification shall show a realistic drawing of the resistors and describe the type of protective coating and can specify the permissible length of excessive protective coating or welding bead extending the leads of the resistor, using one of the alternative methods given in Figure 7.

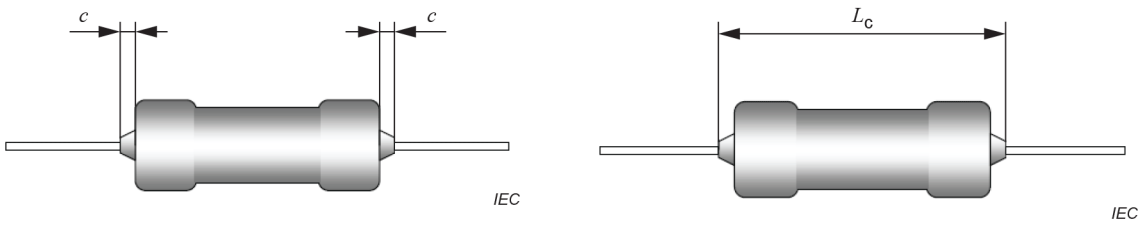

a) Length of excessive coating, c **b) Length between clean leads, L_c**

Figure 7 – Alternative methods for specification of the length of excessive protective coating or welding beads on axial leaded resistors

The length of excessive protective coating, dimension c as shown in Figure 7a, shall be gauged as stated in IEC 60294:2012, Clause 4, using a gauge plate of a thickness corresponding to the maximum permissible length of excessive protective coating. A method for measuring or gauging the length between clean leads, dimension L_c, as shown in Figure 7b, shall be stated in the detail specification, if required.

4.2.1.3 Lead wire spacing

Associated with a style and the actual dimensions of the respective products is the shortest possible standard distance of the centreline of the lead wires bent to 90° from the direct axis of the resistor body, the lead-wire spacing S, as shown in Figure 8. The spacing S also defines the minimum grid dimension G of PCB bores into which the resistor can be assembled with its body located lateral on the PCB surface, when the required forming is done in the assembly process.

Documents
Document Sharing Hub
Full document details: BS IEC 60115-4:2022

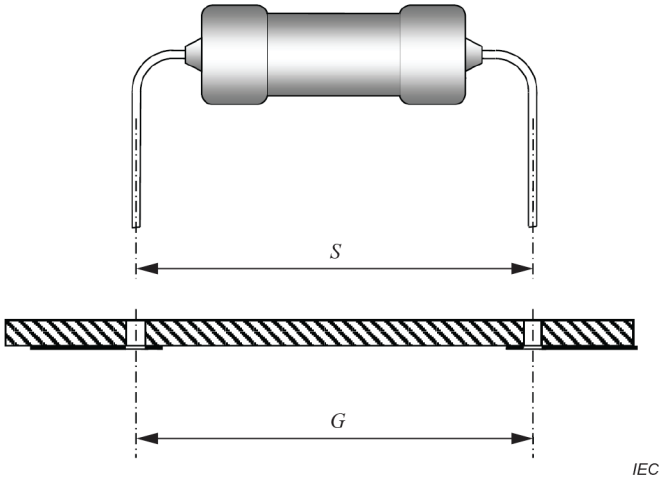

Key:

S Resistor lead-wire spacing, distance of the centrelines of the bent leads.

G Grid of the bores in the circuit board intended for assembly of the resistor

NOTE The drawing of the resistor with formed leads is not intended to suggest the availability of ready-formed resistors under this specification.

Figure 8 – Lead-wire spacing of axial leaded resistors with bent leads

When the component style is other than described above, for example for radial leaded resistors, the detail specification shall state such dimensional information as will adequately describe the resistor. See the provisions on radial formed types of resistors in Annex F

4.2.1.4 Lead eccentricity

Axial leaded resistors are typically designed with centric leads emerging from both faces of the resistor body, unless specifically declared and specified otherwise. A significant offset lead position may jeopardize an automated assembly process and is likely to infringe upon designed distances within the assembled circuit and thereby adversely affect safety requirements.

As an optional element, the detail specification may specify the permissible eccentricity of the leads of a resistor, by means of the real eccentricity e, or of the effective eccentricity e', as shown in Figure 9. The eccentricity shall be assessed on the straight part of each lead nearest to the resistor body.

The detail specification can state a suitable method for measuring or gauging the lead eccentricity if required.

Documents
Document Sharing Hub
Full document details: BS IEC 60115-4:2022

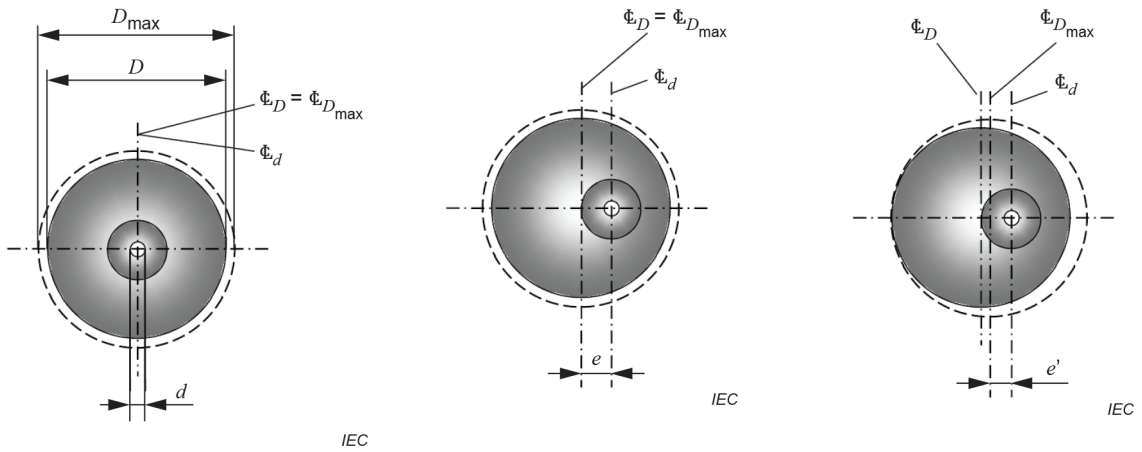

a) Designed lead position **b) Real offset lead position** **c) Effective offset lead position**

Key

d, D	nominal diameters, see Table 1
D_{max}	maximum permissible diameter D, including the permissible tolerance given in Table 1
$\mathfrak{C}$	centreline
e	real eccentricity, distance between centrelines of D and d
e'	effective eccentricity, distance between centrelines of D_{max} and d

Figure 9 – Specification of the lead eccentricity of axial leaded resistors

4.2.2 Ceramic housed type with axial lead wires

The shape and dimensions of axial leaded ceramic housed power resistors are shown in Figure 10, with preferred styles and their respective dimensions given in Table 2. Harmonized style designators of these types should start with two letters, a third letter showing the technology as given in 3.4 shall be added: CA_.

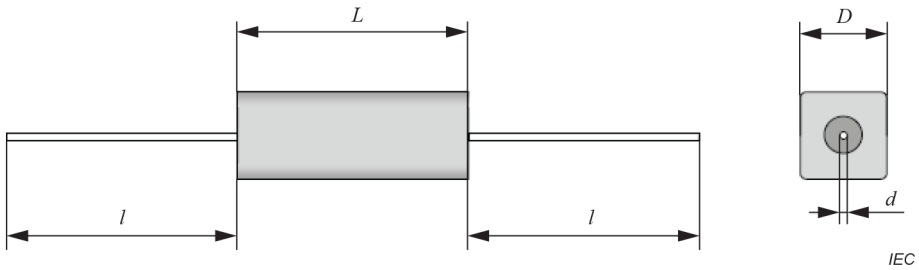

If the ceramic body is other than described above, the detail specification shall state such dimensional information as will adequately describe the resistor.

Figure 10 – Shape and dimensions of axial leaded ceramic housed resistors

Documents
Document Sharing Hub
Full document details: BS IEC 60115-4:2022

Table 2 – Examples of preferred styles of axial leaded ceramic housed resistors

	Typical dimensions[f]			
Style[a]	Body width D[c] mm	Body length L[b] mm	Lead diameter d[d] mm	Lead length l_{min}[e] mm
CA_0620	6,4 × 6,4	20	0,8	50
CA_0625	6,4 × 6,4	25	0,8	50
CA_0638	6,4 × 6,4	38	0,8	50
CA_0925	9 × 9	25	0,8	50
CA_0938	9 × 9	38	0,8	50
CA_0950	9 × 9	50	0,8	50
CA_0975	9 × 9	75	0,8	50

This table shows examples of popular styles of axial leaded ceramic housed resistors with observed typical dimensions. The detail specification shall state the exact dimensions and respective tolerances for the range of styles covered therein.

[a] The style reference starts with the characters CA, representing Ceramic Resistor, Axial.
The style reference is completed by a third character for the product technology, as given in 3.4:
M = metal film; G = metal glaze; X = metal oxide; W = wire-wound; S = metal strip
The numerals indicate the dimensions of the resistor body, using 2 digits for the diameter D, followed by 2 digits for the length L, both given in millimetres.
Example for complete style reference is CAW0620 for axial type with wire-wound core

[b] The body length of the resistor L shall be gauged in accordance with 5.3.11.

[c] The body width of the resistor D shall be gauged in accordance with 5.3.11.

[d] Nominal diameter of the lead wires d, with permissible tolerances according to IEC 60301.

[e] The minimum lead length l_{min} applies only to the free lead length in tape packaging in accordance with IEC 60286-1, if applicable.

[f] For products that have their origin in the imperial system of units, the inch dimensions can be given additionally for information, presented in square brackets

Table 2 presents recommendations for a harmonized system of style designations based on the width and length of the components. Other designations based on the power dissipation are commonly applied and should however be completed with the CA_ prefix.

The detail specification shall show a realistic drawing of the resistors and describe the ceramic outline in detail.

For the specification of any non-solderable area on the lead wires near the housing, the considerations of 4.2.1.2 should be applied.

For the specification of any lead wires' eccentricity, the considerations of 4.2.1.4 should be applied.

4.2.3 Ceramic housed type with radial lead wires

The shape and dimensions of radial leaded ceramic housed power resistors is shown in Figure 11, with preferred styles and their respective dimensions given in Table 3. Harmonized style designators of these types should start with two letters, a third letter showing the technology as given in 3.4 shall be added: CR_.

Documents
Document Sharing Hub
Full document details: BS IEC 60115-4:2022

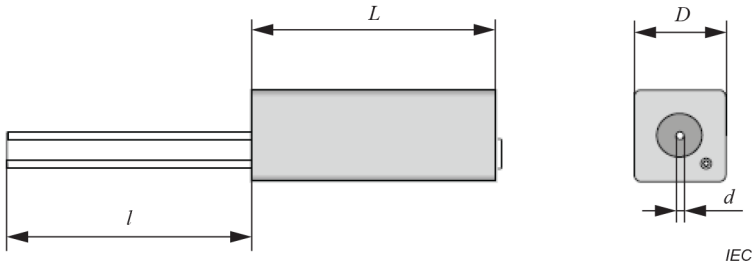

If the ceramic body is other than described above, the detail specification shall state such dimensional information as will adequately describe the resistor. The presence of any grooves for attachment of mounting accessories and the number of corner bores is optional.

Figure 11 – Shape and dimensions of radial type ceramic resistors

Table 3 – Examples of preferred styles of radial type ceramic resistors

Style[a]	Dimensions[f]			
	Body width D[c] mm	Body length L[b] mm	Lead diameter d[d] mm	Lead length l_{min}[e] mm
CR_0620	6,4 × 6,4	20	0,8	50
CR_0625	6,4 × 6,4	25	0,8	50
CR_0638	6,4 × 6,4	38	0,8	50
CR_0925	9 × 9	25	0,8	50
CR_0938	9 × 9	38	0,8	50
CR_0950	9 × 9	50	0,8	50
CR_0975	9 × 9	75	0,8	50

This table shows examples of popular styles of axial leaded ceramic resistors with observed typical dimensions. The detail specification shall state the exact dimensions and respective tolerances for the range of styles covered therein.

[a] The style reference starts with the characters CR, representing Ceramic Resistor, Radial.
The style reference is completed by a third character for the product technology, as given in 3.4:
M = metal film; G = metal glaze; X = metal oxide; W = wire-wound; S = metal strip
The numerals indicate the dimensions of the resistor body, using 2 digits for the diameter D, followed by 2 digits for the length L, both given in millimetres.
Example for complete style reference is CRW0925 for vertical type with wire-wound core

[b] The body length of the resistor L shall be gauged in accordance with 5.3.11.

[c] The body width of the resistor D shall be gauged in accordance with 5.3.11.

[d] Nominal diameter of the lead wires d, with permissible tolerances according to IEC 60301.

[e] The minimum lead length l_{min} applies only to the free lead length in tape packaging according to IEC 60286-2 if required.

[f] For products that have their origin in the imperial system of units, the inch dimensions can be given additionally for information, presented in square brackets

Table 3 presents a recommendation for a harmonized system of style designations based on the width and length of the components. Other designations based on the power dissipation are commonly applied and should however be completed with the CR_ prefix.

The detail specification shall show a realistic drawing of the resistors and describe the ceramic outline in detail.

Because of possible eccentricity of the leads, a minimum clearance between both leads may be specified by the detail specification (apply 4.2.1.4 accordingly)

Documents
Document Sharing Hub
Full document details: BS IEC 60115-4:2022

As an optional element, the detail specification can specify any restrictions for using these resistors in direct contact with the ceramic body to the PCB because of the high temperature of the leads and ceramic surface, and because some lacquer on the surface of the leads can influence the solderability in this area (apply 4.2.1.2 and 5.2.2b accordingly).

For mechanical stability of these radial type power resistors soldered onto the circuit board, some special assembly parts can be required.

4.2.4 Radial or vertical ceramic housed type and dimensions

The shape and dimensions of radial type ceramic power resistors is shown in Figure 12. Their preferred styles and their respective dimensions shall be described in the detail specification. Harmonized style designators of these types should start with two letters, a third letter showing the technology as given in 3.4 shall be added: CR_ or CV_

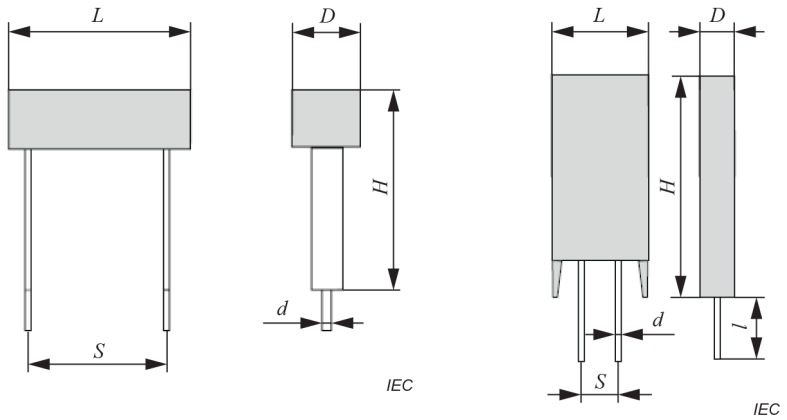

a) vertical type wire wound power resistor: CV_04

b) radial type power resistor: CR_04

If the ceramic body or the punched terminals is other than described above, the detail specification shall state such dimensional information as will adequately describe the resistor.

Figure 12 – Shape and dimensions of radial leaded ceramic resistors

Documents
Document Sharing Hub
Full document details: BS IEC 60115-4:2022

Table 4 – Preferred styles of radial or vertical mount ceramic resistors

Style[a]	Dimensions					
	Body width D^c mm	Body length L^b mm	Body Height H^c mm	Lead spacing S^c mm	Lead diameter d^d mm	Lead length l mm
CV_02	3,5	12	20	5	0,8	3,5
CV_03	8	12	20	5	0,8	3,5
CV_05	9	12	25	5	0,8	3,5
CV_03	9	24	20	12,5	1,5	5
CV_05	9	28	35	15	1,5	5
CV_07	9	36	40	20	1,5	5

This table shows examples of popular styles of radial leaded ceramic resistors with observed typical dimensions. The detail specification shall state the exact dimensions and respective tolerances for the range of styles covered therein. Care shall be taken for punched solder terminals to decribe them in detail

[a] The style reference starts with the characters CV, representing Ceramic Resistor, Vertical or CR, representing Ceramic Resistor, Radial.
The style reference is completed by a third character for the product technology, as given in 3.4:
M = metal film; G = metal glaze; X = metal oxide; W = wire-wound; S = metal strip
The numerals can indicate the power dissipation of the resistor, using 2 digits
Example for complete style reference is CVWXX for vertical type with wire-wound core

[b] The body length of the resistor L shall be gauged in accordance with 5.3.11.

[c] The body width of the resistor D shall be gauged in accordance with 5.3.11.

[d] Nominal diameter of the lead wires d, with permissible tolerances according to IEC 60301.

[e] For products that have their origin in the imperial system of units, the inch dimensions can be given additionally for information, presented in square brackets.

Table 4 presents a recommendation for a harmonized system of style designations based on the power rating. Other designations based on the dimensions are commonly applied and should be completed with the CV_ or CR_ prefix.

The detail specification shall show a realistic drawing of the resistors and describe the ceramic and terminals in detail.

4.2.5 Tubular type of power resistors

The shape of these power resistors (Figure 13) shall be described with preferred styles and their respective dimensions in the detail specification. Harmonized style designators of these types should start with two letters, a third letter showing the technology as given in 3.4 shall be added: RT_.

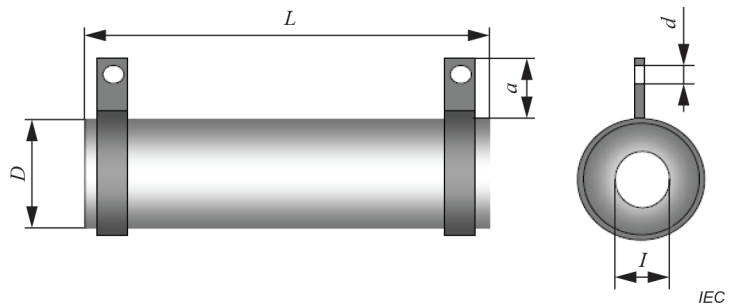

If the ceramic body or the terminals is other than described above, the detail specification shall state such dimensional information as will adequately describe the resistor.

Figure 13 – Shape and dimensions of tubular resistors

Documents
Document Sharing Hub
Full document details: BS IEC 60115-4:2022

Table 5 – Example of preferred styles of tubular types of power resistors

Dimensions[d]					
Style[a]	Body width D[c] mm	Body length L[b] mm	Lug hole d mm	Lug length a mm	Hole diameter I mm
RTW08045	7,5	45	2,8	12	2,6
RTW10050	9,5	50	2,8	15	3,5
RTW12055	12	55	2,8	15	5,5

This table shows examples of tubular types of power resistors with observed typical dimensions. The detail specification shall state the exact dimensions and respective tolerances for the range of styles covered therein.

[a] The style reference starts with the characters RT_, representing Resistor Tubular .
The style reference is completed by a third character for the product technology, as given in 3.4:
W = wire wound or G = glazed technology
The numerals indicate the dimensions of the resistor body, using 2 digits for the diameter D, followed by 3 digits for the length L, both given in millimetres.
Example for complete style reference is RTWXXXXX for wire-wound, tubular type.

[b] The body length of the resistor L shall be gauged in accordance with 5.3.11.

[c] The body diameter of the resistor D shall be gauged in accordance with 5.3.11.

[d] For products that have their origin in the imperial system of units, the inch dimensions can be given additionally for information, presented in square brackets.

Table 5 also presents a recommendation for a harmonized system of style designations based on the width and length of the components. Other designations based on the power dissipation are commonly applied and should be completed with the RTW_ prefix.

Even tubular resistors with more than one single resistor or resistors fitted as rheostats can be used.

The detail specification shall show a realistic drawing of the resistors and describe the ceramic outline in detail.

The dimensions of any related mounting should be defined.

The exact type of termination, such as

– solder lugs,
– screwed lugs,
– strait leads,
– screwed leads,
– push on connectors,

shall be defined by the detail specification.

A code for the type of the terminations can be added to the style designator.

4.2.6 Other types

Any other type of power resistor falling within the scope of this sectional specification can be covered by a respective detail specification. Such a detail specification shall state the type and the relevant styles with sufficient detail.

4.3 Preferred climatic categories

The power resistors covered by this specification are classified into climatic categories according to the general rules given in IEC 60068-1:2013, Annex A.

Documents
Document Sharing Hub
Full document details: BS IEC 60115-4:2022

The lower and upper category temperature and the duration of the damp heat, steady-state test shall be chosen from the following:

Lower category temperature (LCT)	−55 °C; −40 °C; −25 °C and −10 °C.
Upper category temperature (UCT)	155 °C; 175 °C and 200 °C.
Duration of damp heat, steady state test:	21 days or 56 days.

The severities for the cold and dry heat tests are the lower and upper category temperatures, respectively.

NOTE Because the MET is higher than 200 °C, for practical tests the UCT is limited to 200 °C. Anyhow, it is desirable to use the highest possible temperature in order to guarantee the relevance of the performed test with respect to the permissible operating conditions of the resistors.

4.4 Resistance

See IEC 60115-1:2020, 4.2.2

The series of resistance values should be selected according to the tolerance on resistance as recommended by IEC 60063:2015, Table 3.

Zero-ohm resistors until today are not a part of power resistors. To stay in line with the numbering of the other sectional specifications, Annex D is omitted but reserved.

4.5 Tolerances on resistance

The preferred tolerances on resistance are:

±10 %; ±5 %; ±2 %; ±1 %; ±0,5 %.

NOTE Tighter tolerances down to ±0,1 % are observed in the market for power resistors.

4.6 Rated dissipation P_r

The preferred values of rated dissipation P_{70} for resistors at 70 °C ambient temperature are values from the R"5 series of ISO 497: 1 W; 1,5 W; 2,5 W; 4 W; 6,0 W; 10 W up to 1 000 W Other values like 2 W, 3 W, 5 W, 7 W, 9 W have been established in the past and are still commonly applied.

The detail specification shall specify the conditions under which the rated dissipation applies.

Additional dissipation information for other than 70 °C can be given, e.g. P_{25} for 25 °C or P_{40} for 40 °C ambient temperature.

Figure 14 shows the format of a typical power resistor derating curve, suitable for providing information on the required derating of the permissible dissipation for any ambient temperature above the rated temperature.

Documents
Document Sharing Hub

Full document details: BS IEC 60115-4:2022

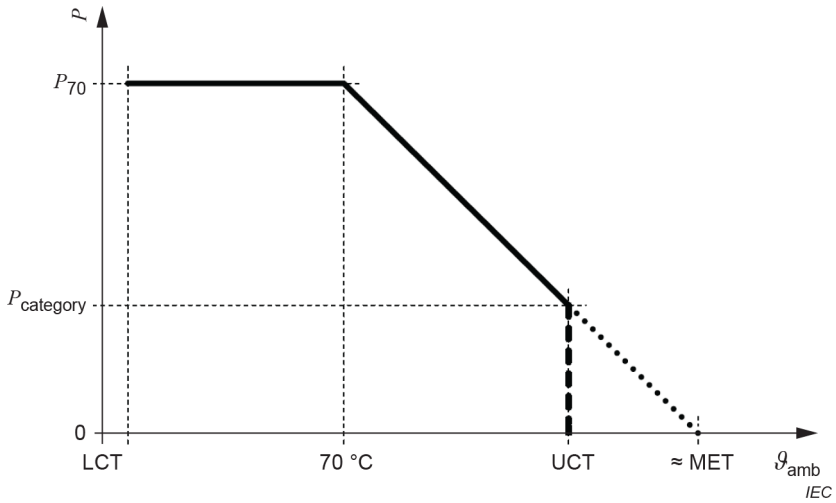

Figure 14 – Typical derating curve for MET > UCT

All end points and break points such as LCT, 70 °C and UCT on the derating curve shall be verified by test.

For power resistors, very often the test in an oven at rated temperature 70 °C is not practical because of thermal overload. The conditions of IEC 60115-1:2020, 7.2 apply.

Figure 15 shows the format of a typical wire wound derating curve, suitable for providing information on the required derating of the permissible dissipation for any ambient temperature above the rated temperature (an example of a test at ambient temperature 25 °C can be found in IEC 60115-1:2020, 7.2.5).

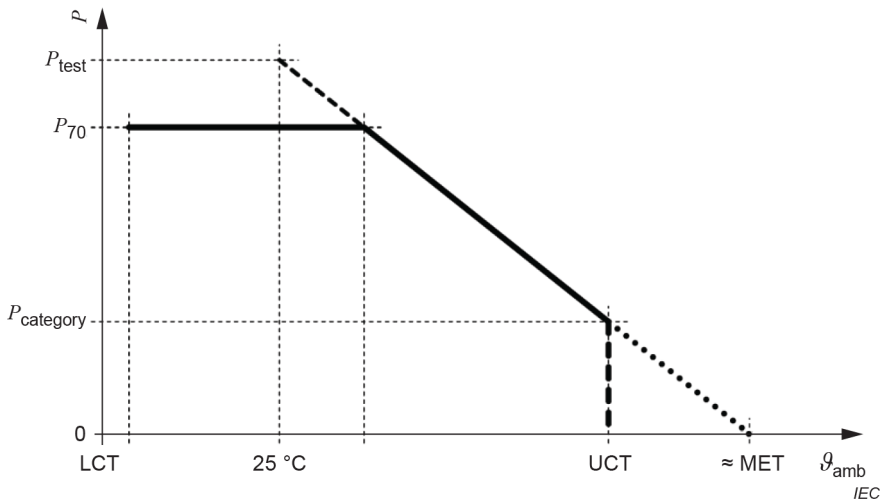

Figure 15 – Typical derating curve for power wire-wound resistors

All end points and break points such as LCT, 25 °C and UCT on the derating curve shall be verified by test.

For any other type of power resistors covered by this sectional specification, the detail specification shall show the appropriate derating curve.

Documents
Document Sharing Hub
Full document details: BS IEC 60115-4:2022

4.7 Limiting element voltage U_{max}

The preferred values of DC or AC r.m.s. limiting element voltage U_{max} are:

values from the R"5 series of ISO 497: 10 V; 15 V; 25 V; 40 V; 60 V; 100 V up to 1 000 V.

50 V, 200 V, 300 V, 500 V, and 750 V have been established in the past and are still commonly applied.

4.8 Insulation voltage U_{ins}

For insulated resistors, the preferred values of DC or AC peak insulation voltage U_{ins} are:

values from the R"5 series of ISO 497: 10 V; 15 V; 25 V; 40 V; 60 V; 100 V up to 1 500 V.

75 V, 300 V, 500 V, 750 V, and 1 100 V have been established in the past and are still commonly applied.

The insulation voltage U_{ins} shall not be specified lower than the AC voltage peak value that can be applied continuously and therefore shall not be rated less than U_{ins} = 1,42 · U_{max}.

4.9 Insulation resistance R_{ins}

For insulated resistors, the insulation resistance R_{ins} should not be specified lower than 1 GΩ.

NOTE See 6.7 for requirements to the insulation resistance R_{ins} after tests.

5 Tests and test severities

5.1 General provisions for tests invoked by this specification

Subclause 5.2 provides detailed prescriptions related to the preparation of specimens for tests, particularly on a preferred variety of mounting methods. Any deviation from these prescriptions as can be required by the type of resistors covered by a particular detail specification under this sectional specification shall be clearly stated by said particular detail specification.

Subclause 5.3 provides detailed prescriptions of all the tests applied by the test schedules for qualification approval and for quality conformance inspection. The amount of information given here exceeds any short overview information given in the "Conditions of test" column of the respective test schedule, and therefore shall take precedence over the overview information.

Subclause 5.4 provides detailed prescriptions of additional tests which are not contained in the test schedules for qualification approval and for quality conformance inspection. These tests are intended to be used as an alternative to tests contained in the test schedules, or as additions to the prescribed number of tests, in the drafting of a detail specification aiming to cover special requirements. Any prescription of such additional test shall be accompanied by the prescription of suitable inspections, e.g. visual inspection or assessment of the change of resistance. Furthermore, the respective detail specification shall present suitable performance requirements for any applied additional test. See Annex E for recommendations on the suitable implementation of these optional and/or additional tests into the test schedules.

The specified tests shall be conducted under standard atmospheric conditions for testing as given in IEC 60115-1:2020, 5.2.3 unless stated otherwise. The specimen shall be kept in standard atmospheric conditions for at least 1 h prior to the tests.

Tolerances on specified test parameters shall be applied in accordance with IEC 60115-1:2020, 5.3 unless stated otherwise.

Documents
Document Sharing Hub

Full document details: BS IEC 60115-4:2022

5.2 Preparation of specimen

5.2.1 Drying

Procedure 1 of IEC 60115-1:2020, 5.4 shall be used.

5.2.2 Mounting of power resistors on test boards

The provisions of IEC 60115-1:2020, 5.5.2 applies.

If test boards are used, resistors designed for the assembly on circuit boards, should be mounted lateral on test boards as prescribed in IEC 60115-2:—, 5.2.2.2. The resistors shall be mounted directly to the mounting boreholes utilizing 90° lead bends, as shown in Figure 16, with consideration of the following constraints (see also IEC 60115-1:2020, 5.5.2).

The straight portion of the lead shall extend for a length of a minimum of 5 mm from the body or weld before start of the bending radius; and:

a) The bending radius r, measured on the inside of the lead wire bend, shall be

- $r \geq 1{,}0\ d$ for $d < 0{,}8$ mm;
- $r \geq 1{,}5\ d$ for $0{,}8\ \text{mm} \leq d \leq 1{,}2$ mm;
- $r \geq 2{,}0\ d$ for $d > 1{,}2$ mm.

b) The clearance h between the axial resistor body and the test board surface shall be

$h \geq 10$ mm for resistors covered by this specification

Depending on the surface temperature of the test specimen and the distance between test board and resistor body, the clearance should be increased not to overheat the board during testing.

c) The cropped lead wire shall be visible in the solder, the protrusion length p below the test board shall be

$p \leq 2{,}5$ mm.

NOTE Special considerations can be required on a minimum clearance of resistors specified for a high limiting element voltage or high power. Such considerations and/or constraints are subject to the relevant detail specification.

Documents
Document Sharing Hub
Full document details: BS IEC 60115-4:2022

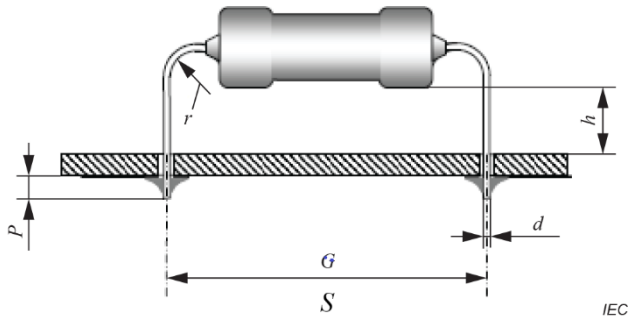

Key:

S resistors lead-wire spacing

d nominal diameter of the lead-wire

r lead-wire bending radius, measured on the inside of the wire

h clearance of the resistor body above the circuit board

p protrusion length of the cropped lead-wire below the circuit board

G grid of bores in the circuit board intended for assembly of the resistor

NOTE Plated via holes can be required for the vibration test, the bump test or the shock test in order to build a stronger solder joint.

Figure 16 – Assembly of specimen to the test board

The workmanship requirements of Annex C shall be observed, particularly

– C.2.1 for details concerning the straight length and the radius of the lead forming;
– C.3.2 for details concerning the lateral mounting position of the resistor;
– Clause C.4 for details concerning the cropping of the protruding lead ends.

Special provisions can be required on a minimum clearance of resistors specified for a high limiting element voltage. Such provisions and/or constraints are subject to the relevant detail specification.

In order to minimize the effect of heat emitted from any specimen to any other specimen, the test boards shall be positioned vertically, with the specimens aligned in a vertical orientation in a horizontal row.

5.2.3 Mounting of power resistors on test racks

The respective provisions of IEC 60115-1:2020, 5.5 and either IEC 60115-1:2020, 7.1.3 or IEC 60115-1:2020, 7.2.3 shall be applied.

As the default mounting method for power resistors, or if the relevant specification calls for mounting of the specimens on a test rack, the resistors shall be connected by their terminations (e.g. lead wires) to suitable fixation devices on the rack.

All axial resistors should be mounted in a horizontal position into the rack or, if of different shape, in their standard position. To minimize the effect of heat emitted from any specimen to any other specimen, the test rack shall be positioned horizontally, with the specimens aligned horizontally within the rack, and racks shall not be stacked.

See Figure 17 for the dimensions within a rack. Unless specified otherwise, the following constraints shall apply:

a) the specimens' mounting pitch shall at least be 7 times the body diameter, $P \geq 7 \times D$;
b) the specimens shall be approximately centred between the fixations on each bar, $A \approx 2$;

Documents
Document Sharing Hub
Full document details: BS IEC 60115-4:2022

c) the length of lead wires shall not be shorter than 20 mm, $l_1 \geq 20$ mm, $l_2 \geq 20$ mm;

d) the axial displacement shall not exceed 50 % of the specimen body length, $\Delta l \leq 0{,}5 \times L$;

e) the radial displacement shall not exceed the specimen body diameter, $\Delta P \leq D$;

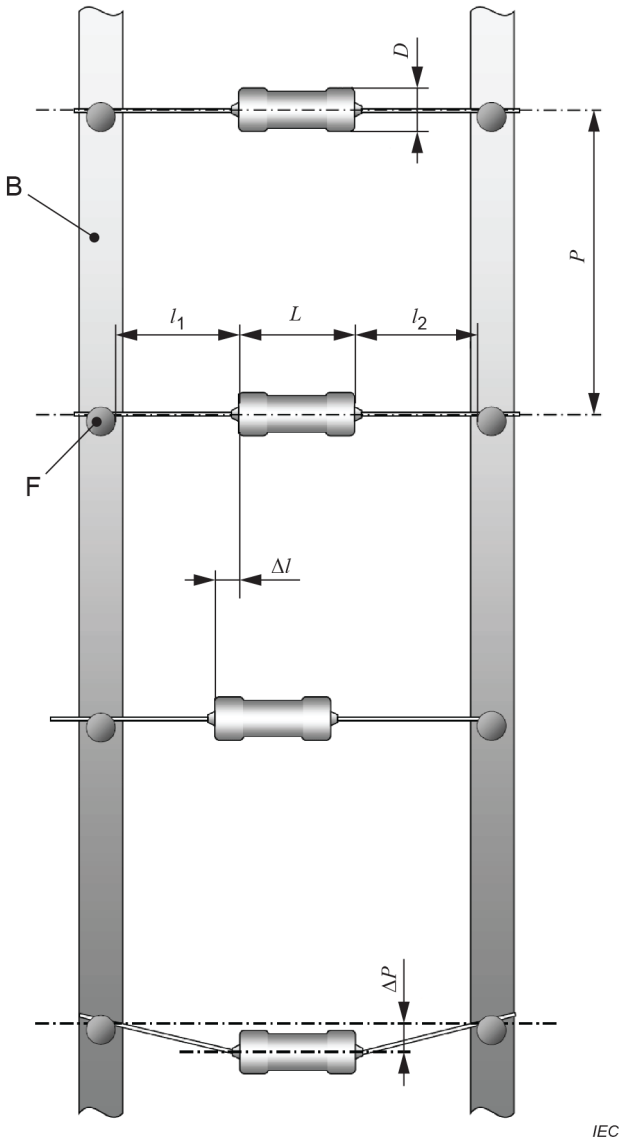

Key

B	conductive bar, e.g. brass
F	specimen fixation device
D	specimen body diameter
L	specimen body length
l_1, l_2	specimen lead length
Δl	axial specimen displacement
P	centre line pitch of any two adjacent specimens
ΔP	radial specimen displacement

Figure 17 – Mounting of axial leaded specimens on a rack, top view

Documents
Document Sharing Hub
Full document details: BS IEC 60115-4:2022