BS IEC 61076-8-103:2023

BSI Standards Publication

Connectors for electrical and electronic equipment — Product requirements

Part 8-103: Power connectors — Detail specification for 2P+PE circular connectors with 20 A rated current and push-pull locking IP65/IP67 with metal housing

Documents
Document Sharing Hub

Full document details: BS IEC 61076-8-103:2023

National foreword

This British Standard is the UK implementation of IEC 61076-8-103:2023.

The UK participation in its preparation was entrusted to Technical Committee EPL/48, Electromechanical components and mechanical structures for electronic equipment.

A list of organizations represented on this committee can be obtained on request to its committee manager.

Contractual and legal considerations

This publication has been prepared in good faith, however no representation, warranty, assurance or undertaking (express or implied) is or will be made, and no responsibility or liability is or will be accepted by BSI in relation to the adequacy, accuracy, completeness or reasonableness of this publication. All and any such responsibility and liability is expressly disclaimed to the full extent permitted by the law.

This publication is provided as is, and is to be used at the recipient's own risk.

The recipient is advised to consider seeking professional guidance with respect to its use of this publication.

This publication is not intended to constitute a contract. Users are responsible for its correct application.

© The British Standards Institution 2023
Published by BSI Standards Limited 2023

ISBN 978 0 539 03683 1

ICS 31.220.10

Compliance with a British Standard cannot confer immunity from legal obligations.

This British Standard was published under the authority of the Standards Policy and Strategy Committee on 30 June 2023.

Amendments/corrigenda issued since publication

Date	Text affected

Documents
Document Sharing Hub

Full document details: BS IEC 61076-8-103:2023

IEC 61076-8-103

Edition 1.0 2023-05

INTERNATIONAL STANDARD

NORME INTERNATIONALE

Connectors for electrical and electronic equipment – Product requirements – Part 8-103: Power connectors – Detail specification for 2P+PE circular connectors with 20 A rated current and push-pull locking IP65/IP67 with metal housing

Connecteurs pour équipements électriques et électroniques – Exigences de produit – Partie 8-103: Connecteurs d'alimentation – Spécification particulière relative aux connecteurs circulaires 2P+PE avec un courant assigné de 20 A et un mécanisme de verrouillage de type pousser-tirer IP65/IP67, logés dans un boîtier métallique

INTERNATIONAL
ELECTROTECHNICAL
COMMISSION

COMMISSION
ELECTROTECHNIQUE
INTERNATIONALE

ICS 31.220.10

ISBN 978-2-8322-6843-8

Warning! Make sure that you obtained this publication from an authorized distributor.
Attention! Veuillez vous assurer que vous avez obtenu cette publication via un distributeur agréé.

® Registered trademark of the International Electrotechnical Commission
Marque déposée de la Commission Electrotechnique Internationale

Documents
Document Sharing Hub

Full document details: BS IEC 61076-8-103:2023

CONTENTS

FOREWORD 5
1 Scope 8
2 Normative references 8
3 Terms and definitions 11
4 Technical information 11
4.1 Recommended method of termination 11
4.1.1 General 11
4.1.2 Number of contacts and contact cavities 11
4.2 Ratings and characteristics 11
4.3 Systems of levels 11
4.3.1 Performance levels 11
4.3.2 Compatibility levels 12
4.4 Classification into climatic categories 12
4.5 Creepage and clearance distances 12
4.6 Current-carrying capacity 12
4.7 Marking 12
5 Dimensional information 12
5.1 General 12
5.2 Isometric view and common features 12
5.2.1 General 12
5.2.2 Isometric view of free connector 13
5.2.3 Isometric view of fixed connector 13
5.3 Free connector 14
5.3.1 General 14
5.3.2 Dimensions 14
5.3.3 Terminations 15
5.4 Fixed connector 15
5.4.1 General 15
5.4.2 Dimensions 16
5.4.3 Terminations 16
5.5 Mounting information for connectors 17
5.6 Gauges – Sizing gauges and retention force gauges 17
6 Technical characteristics 17
6.1 Classification into climatic categories 17
6.2 Electrical characteristics 17
6.2.1 Creepage and clearance distances 17
6.2.2 Voltage proof 18
6.2.3 Current-carrying capacity 18
6.2.4 Electrical load and temperature 18
6.2.5 Contact resistance 19
6.2.6 Insulation resistance 19
6.3 Mechanical characteristics 19
6.3.1 Mechanical operation 19
6.3.2 Effectiveness of connector coupling devices 19
6.3.3 Gauge retention force (resilient contact) 19
6.3.4 Engaging and separating forces 19

AVA Documents
Document Sharing Hub

6.3.5 Contact retention in insert 20
6.3.6 Polarizing and keying method 20
6.4 Dynamic stress tests 20
6.4.1 Vibration (sine) 20
6.4.2 Shock 20
6.4.3 Free fall (repeated) 20
6.4.4 IP degree of protection 21
6.4.5 Glow-wire flammability test method for end-products (GWEPT) 21
6.5 Climatic tests 21
6.5.1 Rapid change of temperature 21
6.5.2 Dry heat 21
6.5.3 Low temperature 21
6.5.4 Low air pressure 21
6.5.5 Damp heat, cyclic 22
6.5.6 Damp heat, steady state 22
6.5.7 Corrosion, salt mist 22
6.5.8 Flowing mixed gas corrosion 22
6.6 Environmental aspects 22
6.6.1 Marking of insulation material (plastic) 22
6.6.2 Design/use of material 22
7 Test schedule 22
7.1 General 22
7.2 Test schedules 23
7.2.1 Basic (minimum) test schedule 23
7.2.2 Full test schedule 23
7.3 Test procedures and measurement methods 32
7.4 Pre-conditioning 32
7.5 Wiring and mounting of test specimens 33
7.5.1 Wiring 33
7.5.2 Mounting 33

Figure 1 – Free connector 13
Figure 2 – Fixed connector 13
Figure 3 – Free connector 14
Figure 4 – Fixed connector 16
Figure 5 – Gauge for contact 17
Figure 6 – Current-temperature derating (2,5 mm^2 wire size) 18

Table 1 – Free connector dimensions 15
Table 2 – Fixed connector dimensions 16
Table 3 – Gauge dimensions 17
Table 4 – Climatic category 17
Table 5 – Voltage proof 18
Table 6 – Number of test specimens 23
Table 7 – Test group P 23
Table 8 – Test group AP 24

AVA Documents
Document Sharing Hub

Full document details: BS IEC 61076-8-103:2023

Table 9 – Test group BP 27
Table 10 – Test group CP 29
Table 11 – Test group DP 29
Table 12 – Test group EP 32
Table 13 – Test group GP 32

Documents
Document Sharing Hub

Full document details: BS IEC 61076-8-103:2023

INTERNATIONAL ELECTROTECHNICAL COMMISSION

CONNECTORS FOR ELECTRICAL AND ELECTRONIC EQUIPMENT – PRODUCT REQUIREMENTS –

Part 8-103: Power connectors – Detail specification for 2P+PE circular connectors with 20 A rated current and push-pull locking IP65/IP67 with metal housing

FOREWORD

1) The International Electrotechnical Commission (IEC) is a worldwide organization for standardization comprising all national electrotechnical committees (IEC National Committees). The object of IEC is to promote international co-operation on all questions concerning standardization in the electrical and electronic fields. To this end and in addition to other activities, IEC publishes International Standards, Technical Specifications, Technical Reports, Publicly Available Specifications (PAS) and Guides (hereafter referred to as "IEC Publication(s)"). Their preparation is entrusted to technical committees; any IEC National Committee interested in the subject dealt with may participate in this preparatory work. International, governmental and non-governmental organizations liaising with the IEC also participate in this preparation. IEC collaborates closely with the International Organization for Standardization (ISO) in accordance with conditions determined by agreement between the two organizations.
2) The formal decisions or agreements of IEC on technical matters express, as nearly as possible, an international consensus of opinion on the relevant subjects since each technical committee has representation from all interested IEC National Committees.
3) IEC Publications have the form of recommendations for international use and are accepted by IEC National Committees in that sense. While all reasonable efforts are made to ensure that the technical content of IEC Publications is accurate, IEC cannot be held responsible for the way in which they are used or for any misinterpretation by any end user.
4) In order to promote international uniformity, IEC National Committees undertake to apply IEC Publications transparently to the maximum extent possible in their national and regional publications. Any divergence between any IEC Publication and the corresponding national or regional publication shall be clearly indicated in the latter.
5) IEC itself does not provide any attestation of conformity. Independent certification bodies provide conformity assessment services and, in some areas, access to IEC marks of conformity. IEC is not responsible for any services carried out by independent certification bodies.
6) All users should ensure that they have the latest edition of this publication.
7) No liability shall attach to IEC or its directors, employees, servants or agents including individual experts and members of its technical committees and IEC National Committees for any personal injury, property damage or other damage of any nature whatsoever, whether direct or indirect, or for costs (including legal fees) and expenses arising out of the publication, use of, or reliance upon, this IEC Publication or any other IEC Publications.
8) Attention is drawn to the Normative references cited in this publication. Use of the referenced publications is indispensable for the correct application of this publication.
9) Attention is drawn to the possibility that some of the elements of this IEC Publication may be the subject of patent rights. IEC shall not be held responsible for identifying any or all such patent rights.

IEC 61076-8-103 has been prepared by subcommittee 48B: Electrical connectors, of IEC technical committee 48: Electrical connectors and mechanical structures for electrical and electronic equipment. It is an International Standard.

The text of this International Standard is based on the following documents:

Draft	Report on voting
48B/2952/CDV	48B/2990/RVC

Full information on the voting for its approval can be found in the report on voting indicated in the above table.

The language used for the development of this International Standard is English.

Documents
Document Sharing Hub

This document was drafted in accordance with ISO/IEC Directives, Part 2, and developed in accordance with ISO/IEC Directives, Part 1 and ISO/IEC Directives, IEC Supplement, available at www.iec.ch/members_experts/refdocs. The main document types developed by IEC are described in greater detail at www.iec.ch/publications.

A list of all parts of IEC 61076 series, under the general title *Connectors for electrical and electronic equipment – Product requirements*, can be found on the IEC website.

Future standards in this series will carry the new general title as cited above. Titles of existing standards in this series will be updated at the time of the next edition.

The committee has decided that the contents of this document will remain unchanged until the stability date indicated on the IEC website under webstore.iec.ch in the data related to the specific document. At this date, the document will be

- reconfirmed,
- withdrawn,
- replaced by a revised edition, or
- amended.

Documents
Document Sharing Hub

Full document details: BS IEC 61076-8-103:2023

The International Electrotechnical Commission **IEC SC 48B—Electrical connectors**		**IEC 61076-8-103**
Detail specification in accordance with IEC 61076-8		
Free connector	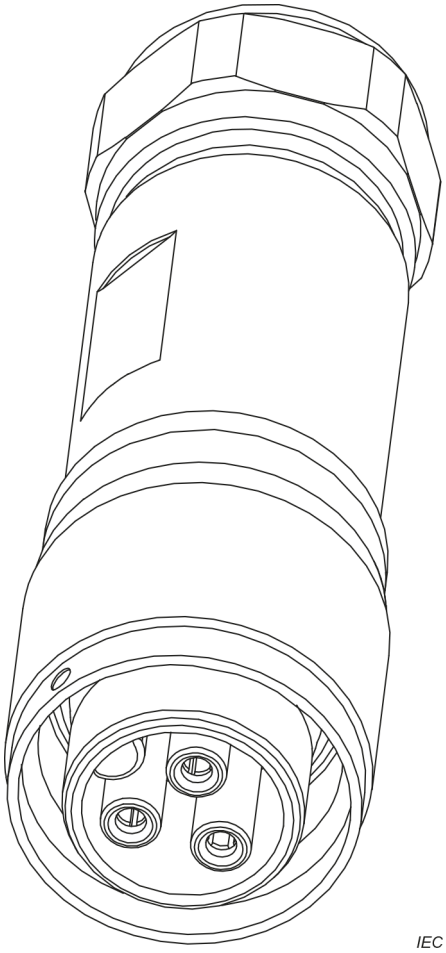	For rated current of 20 A; 2P+PE; Female contacts; Push-pull locking; 360° shielding.
Fixed connector	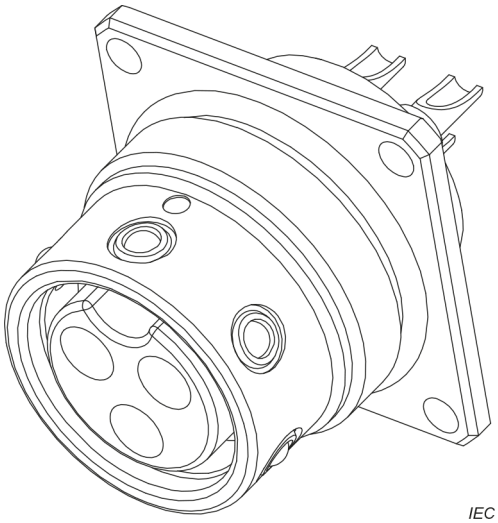	For rated current of 20 A; 2P+PE; Male contacts; Push-pull locking; 360° shielding.

Documents
Document Sharing Hub
Full document details: BS IEC 61076-8-103:2023

CONNECTORS FOR ELECTRICAL AND ELECTRONIC EQUIPMENT – PRODUCT REQUIREMENTS –

Part 8-103: Power connectors – Detail specification for 2P+PE circular connectors with 20 A rated current and push-pull locking IP65/IP67 with metal housing

1 Scope

This part of IEC 61076-8 describes free and fixed 2-pole power (1P+N) plus PE circular connectors with 20 A rated current, rated voltage up to and including 300 V AC, IP65/IP67 metal housing with push-pull locking (hereinafter referred to as a connectors) for use in electrical and electronic equipment. It includes overall dimensions, interface dimensions, technical characteristics, performance requirements and test methods.

2 Normative references

The following documents are referred to in the text in such a way that some or all of their content constitutes requirements of this document. For dated references, only the edition cited applies. For undated references, the latest edition of the referenced document (including any amendments) applies.

IEC 60050-581, *International Electrotechnical Vocabulary (IEV) – Part 581: Electromechanical components for electronic equipment*

IEC 60068-1, *Environmental testing – Part 1: General and guidance*

IEC60068-2-60, *Environmental testing – Part 2-60: Tests – Test Ke: Flowing mixed gas corrosion test*

IEC 60228, *Conductors of insulated cables*

IEC 60352-2, *Solderless connections – Part 2: Crimped connections – General requirements, test methods and practical guidance*

IEC 60352-3, *Solderless connections – Part 3: Accessible insulation displacement (ID) connections – General requirements, test methods and practical guidance*

IEC 60352-4, *Solderless connections – Part 4: Non-accessible insulation displacement (ID) connections – General requirements, test methods and practical guidance*

IEC 60352-5, *Solderless connections – Part 5: Press-in connections – General requirements, test methods and practical guidance*

IEC 60352-6, *Solderless connections – Part 6: Insulation piercing connections – General requirements, test methods and practical guidance*

IEC 60352-7, *Solderless connections – Part 7: Spring clamp connections – General requirements, test methods and practical guidance*

IEC 60512-1-1, *Connectors for electronic equipment-Tests and measurements – Part 1-1: General examination – Test 1a: Visual examination*

AVA Documents
Document Sharing Hub

Full document details: BS IEC 61076-8-103:2023

IEC 60512-1-2, *Connectors for electronic equipment-Tests and measurements – Part 1-2: General examination – Test 1b: Examination of dimension and mass*

IEC 60512-2-1, *Connectors for electronic equipment – Tests and measurements – Part 2-1: Electrical continuity and contact resistance tests – Test 2a: Contact resistance – Millivolt level method*

IEC 60512-2-5, *Connectors for electronic equipment – Tests and measurements – Part 2-5: Electrical continuity and contact resistance tests – Test 2e: Contact disturbance*

IEC 60512-3-1, *Connectors for electronic equipment – Tests and measurements – Part 3-1: Insulation tests – Test 3a: Insulation resistance*

IEC 60512-4-1, *Connectors for electronic equipment – Tests and measurements – Part 4-1: Voltage stress tests – Test 4a: Voltage proof*

IEC 60512-5-2, *Connectors for electronic equipment – Tests and measurements – Part 5-2: Current-carrying capacity tests – Test 5b: Current-temperature derating*

IEC 60512-6-3, *Connectors for electronic equipment – Tests and measurements – Part 6-3: Dynamic stress tests – Test 6c: Shock*

IEC 60512-6-4, *Connectors for electronic equipment – Tests and measurements – Part 6-4: Dynamic stress tests – Test 6d: Vibration (sinusoidal)*

IEC 60512-7-1, *Connectors for electronic equipment – Tests and measurements – Part 7-1: Impact tests (free connectors) – Test 7a: Free fall (repeated)*

IEC 60512-9-1, *Connectors for electronic equipment – Tests and measurements – Part 9-1: Endurance tests – Test 9a: Mechanical operation*

IEC 60512-9-2, *Connectors for electronic equipment – Tests and measurements – Part 9-2: Endurance tests – Test 9b: Electrical load and temperature*

IEC 60512-11-1, *Connectors for electrical and electronic equipment – Tests and measurements – Part 11-1: Climatic tests – Test 11a - Climatic sequence*

IEC 60512-11-3, *Connectors for electronic equipment – Tests and measurements – Part 11-3: Climatic tests – Test 11c: Damp heat, steady state*

IEC 60512-11-4, *Connectors for electronic equipment – Tests and measurements – Part 11-4: Climatic tests – Test 11d: Rapid change of temperature*

IEC 60512-11-6, *Connectors for electronic equipment – Tests and measurements – Part 11-6: Climatic tests – Test 11f: Corrosion, salt mist*

IEC 60512-11-7, *Connectors for electronic equipment – Tests and measurements – Part 11-7: Climatic tests – Test 11g: Flowing mixed gas corrosion test*

IEC 60512-11-9, *Connectors for electronic equipment – Tests and measurements – Part 11-9: Climatic tests – Test 11i: Dry heat*

IEC 60512-11-10, *Connectors for electronic equipment – Tests and measurements – Part 11-10: Climatic tests – Test 11j: Cold*

Documents
Document Sharing Hub

Full document details: BS IEC 61076-8-103:2023