BS IEC 61076-8-112:2025

BSI Standards Publication

Connectors for electrical and electronic equipment — Product requirements

Part 8-112: Power connectors — Detail specification for 2-pole snap locking rectangular connectors with IP65/IP67 plastic housing for rated current of 50 A

Documents
Document Sharing Hub

Full document details: BS IEC 61076-8-112:2025

National foreword

This British Standard is the UK implementation of IEC 61076-8-112:2025.

The UK participation in its preparation was entrusted to Technical Committee EPL/48, Electromechanical components and mechanical structures for electronic equipment.

A list of organizations represented on this committee can be obtained on request to its committee manager.

Contractual and legal considerations

This publication has been prepared in good faith, however no representation, warranty, assurance or undertaking (express or implied) is or will be made, and no responsibility or liability is or will be accepted by BSI in relation to the adequacy, accuracy, completeness or reasonableness of this publication. All and any such responsibility and liability is expressly disclaimed to the full extent permitted by the law.

This publication is provided as is, and is to be used at the recipient's own risk.

The recipient is advised to consider seeking professional guidance with respect to its use of this publication.

This publication is not intended to constitute a contract. Users are responsible for its correct application.

© The British Standards Institution 2025
Published by BSI Standards Limited 2025

ISBN 978 0 539 29092 9

ICS 31.220.10

Compliance with a British Standard cannot confer immunity from legal obligations.

This British Standard was published under the authority of the Standards Policy and Strategy Committee on 28 February 2025.

Amendments/corrigenda issued since publication

Date	Text affected

Documents
Document Sharing Hub

Full document details: BS IEC 61076-8-112:2025

IEC 61076-8-112

Edition 1.0 2025-02

INTERNATIONAL STANDARD

Connectors for electrical and electronic equipment – Product requirements Part 8-112: Power connectors – Detail specification for 2-pole snap locking rectangular connectors with IP65/IP67 plastic housing for rated current of 50 A

INTERNATIONAL
ELECTROTECHNICAL
COMMISSION

ICS 31.220.10

ISBN 978-2-8327-0004-4

Warning! Make sure that you obtained this publication from an authorized distributor.

® Registered trademark of the International Electrotechnical Commission

Documents
Document Sharing Hub

Full document details: BS IEC 61076-8-112:2025

CONTENTS

FOREWORD 5
1 Scope 8
2 Normative references 8
3 Terms and definitions 10
4 Technical information 10
4.1 Recommended method of termination 10
4.1.1 General 10
4.1.2 Number of contacts and contact cavities 10
4.2 Ratings and characteristics 11
4.3 Systems of levels 11
4.3.1 Performance levels 11
4.3.2 Compatibility levels 11
4.4 Classification into climatic categories 11
4.5 Clearance and creepage distance 11
4.6 Current-carrying capacity 11
4.7 Marking 12
4.8 Safety aspects 12
5 Dimensional information 12
5.1 General 12
5.2 Isometric view and common features 12
5.2.1 Isometric view of free connector (Figure 1) 12
5.2.2 Isometric view of fixed connector (Figure 2) 13
5.3 Engagement (mating) information 13
5.4 Fixed connectors 13
5.4.1 Dimensions (Figure 3 and Table 2) 13
5.4.2 Terminations 14
5.5 Free connectors 15
5.5.1 Dimensions (Figure 4 and Table 3) 15
5.5.2 Terminations 16
5.6 Accessories 16
5.7 Mounting information 16
5.8 Gauges 16
5.8.1 Sizing gauges and retention force gauges (Figure 5 and Table 4) 16
6 Technical characteristics 17
6.1 Classification into climatic categories 17
6.2 Electrical characteristics 17
6.2.1 Clearance and creepage distance 17
6.2.2 Voltage proof 17
6.2.3 Contact resistance 17
6.2.4 Insulation resistance 17
6.2.5 Temperature rise 18
6.2.6 Electrical load and temperature 18
6.3 Mechanical characteristics 18
6.3.1 Mechanical strength impact 18
6.3.2 Mechanical operation 18
6.3.3 Breaking capacity (engaging/separating with electrical load) 19

AVA Documents
Document Sharing Hub

6.3.4 Effectiveness of connector coupling devices ... 19
6.3.5 Engaging and separating force ... 19
6.3.6 Contact retention in insert ... 19
6.3.7 Gauge retention force (resilient contact) ... 20
6.3.8 Conductor secureness ... 20
6.4 Dynamic stress test ... 20
6.4.1 Vibration (sine) ... 20
6.4.2 Shock ... 20
6.4.3 IP degree of protection ... 21
6.5 Climatic test ... 21
6.5.1 Damp heat, steady state ... 21
6.5.2 Rapid change of temperature ... 21
6.5.3 Corrosion, salt mist ... 21
6.5.4 Dry heat ... 21
6.5.5 Cold ... 21
6.6 Environmental aspects ... 22
6.6.1 Marking of insulation material (plastic) ... 22
6.6.2 Design and use of material ... 22
7 Tests and test schedules ... 22
7.1 General ... 22
7.2 Test schedules ... 22
7.2.1 Basic (minimum) test schedule ... 22
7.2.2 Full test schedule ... 22
7.3 Test procedures and measurement methods ... 30
7.4 Pre-conditioning ... 30
7.5 Wiring and mounting of test specimens ... 30
7.5.1 Wiring ... 30
7.5.2 Mounting ... 30

Figure 1 – Free female connector ... 12
Figure 2 – Fixed male connector ... 13
Figure 3 – Fixed male connector ... 13
Figure 4 – Free female connector ... 15
Figure 5 – Gauge for contacts ... 16

Table 1 – Climatic category ... 11
Table 2 – Fixed connector dimensions ... 14
Table 3 – Free connector dimensions ... 15
Table 4 – Gauge dimensions ... 16
Table 5 – Conductor secureness test ... 20
Table 6 – Vibration ... 20
Table 7 – Number of test specimens ... 22
Table 8 – Test group P ... 23
Table 9 – Test group AP ... 23
Table 10 – Test group BP ... 25
Table 11 – Test group CP ... 26

AVA Documents
Document Sharing Hub

Full document details: BS IEC 61076-8-112:2025

Table 12 – Test group DP 27
Table 13 – Test group EP 28
Table 14 – Test group GP 28
Table 15 – Test group JP 29
Table 16 – Test group KP 29

Documents
Document Sharing Hub

Full document details: BS IEC 61076-8-112:2025

INTERNATIONAL ELECTROTECHNICAL COMMISSION

CONNECTORS FOR ELECTRICAL AND ELECTRONIC EQUIPMENT – PRODUCT REQUIREMENTS –

Part 8-112: Power connectors – Detail specification for 2-pole snap locking rectangular connectors with IP65/IP67 plastic housing for rated current of 50 A

FOREWORD

1) The International Electrotechnical Commission (IEC) is a worldwide organization for standardization comprising all national electrotechnical committees (IEC National Committees). The object of IEC is to promote international co-operation on all questions concerning standardization in the electrical and electronic fields. To this end and in addition to other activities, IEC publishes International Standards, Technical Specifications, Technical Reports, Publicly Available Specifications (PAS) and Guides (hereafter referred to as "IEC Publication(s)"). Their preparation is entrusted to technical committees; any IEC National Committee interested in the subject dealt with may participate in this preparatory work. International, governmental and non-governmental organizations liaising with the IEC also participate in this preparation. IEC collaborates closely with the International Organization for Standardization (ISO) in accordance with conditions determined by agreement between the two organizations.
2) The formal decisions or agreements of IEC on technical matters express, as nearly as possible, an international consensus of opinion on the relevant subjects since each technical committee has representation from all interested IEC National Committees.
3) IEC Publications have the form of recommendations for international use and are accepted by IEC National Committees in that sense. While all reasonable efforts are made to ensure that the technical content of IEC Publications is accurate, IEC cannot be held responsible for the way in which they are used or for any misinterpretation by any end user.
4) In order to promote international uniformity, IEC National Committees undertake to apply IEC Publications transparently to the maximum extent possible in their national and regional publications. Any divergence between any IEC Publication and the corresponding national or regional publication shall be clearly indicated in the latter.
5) IEC itself does not provide any attestation of conformity. Independent certification bodies provide conformity assessment services and, in some areas, access to IEC marks of conformity. IEC is not responsible for any services carried out by independent certification bodies.
6) All users should ensure that they have the latest edition of this publication.
7) No liability shall attach to IEC or its directors, employees, servants or agents including individual experts and members of its technical committees and IEC National Committees for any personal injury, property damage or other damage of any nature whatsoever, whether direct or indirect, or for costs (including legal fees) and expenses arising out of the publication, use of, or reliance upon, this IEC Publication or any other IEC Publications.
8) Attention is drawn to the Normative references cited in this publication. Use of the referenced publications is indispensable for the correct application of this publication.
9) IEC draws attention to the possibility that the implementation of this document may involve the use of (a) patent(s). IEC takes no position concerning the evidence, validity or applicability of any claimed patent rights in respect thereof. As of the date of publication of this document, IEC had not received notice of (a) patent(s), which may be required to implement this document. However, implementers are cautioned that this may not represent the latest information, which may be obtained from the patent database available at https://patents.iec.ch. IEC shall not be held responsible for identifying any or all such patent rights.

IEC 61076-8-112 has been prepared by subcommittee 48B: Electrical connectors, of IEC technical committee 48: Electrical connectors and mechanical structures for electrical and electronic equipment. It is an International Standard.

The text of this International Standard is based on the following documents:

Draft	Report on voting
48B/3115/FDIS	48B/3133/RVD

Full information on the voting for its approval can be found in the report on voting indicated in the above table.

AVA Documents
Document Sharing Hub

The language used for the development of this International Standard is English.

This document was drafted in accordance with ISO/IEC Directives, Part 2, and developed in accordance with ISO/IEC Directives, Part 1 and ISO/IEC Directives, IEC Supplement, available at www.iec.ch/members_experts/refdocs. The main document types developed by IEC are described in greater detail at www.iec.ch/publications.

A list of all parts in the IEC 61076 series, published under the general title *Connectors for electrical and electronic equipment*, can be found on the IEC website.

The committee has decided that the contents of this document will remain unchanged until the stability date indicated on the IEC website under webstore.iec.ch in the data related to the specific document. At this date, the document will be

- reconfirmed,
- withdrawn, or
- revised.

Documents
Document Sharing Hub

Full document details: BS IEC 61076-8-112:2025

The International Electrotechnical Commission **IEC SC 48B – Electrical connectors**		**IEC 61076-8-112 Ed.1**
Detail specification in accordance with IEC 61076-1		
Free connector	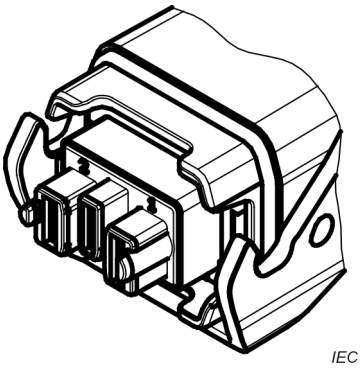 2-pole 50 A free connector	Free rectangular connector; For rated current of 50 A; 2-pole; Female contacts for power; Straight insertion and withdrawal;
Fixed connector	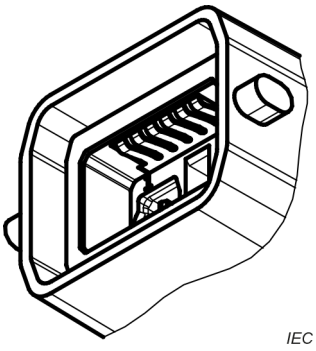 2-pole 50 A fixed connector	Fixed rectangular connector; For rated current of 50 A; 2-pole; Male contacts for power; Straight insertion and withdrawal;

Documents
Document Sharing Hub
Full document details: BS IEC 61076-8-112:2025

CONNECTORS FOR ELECTRICAL AND ELECTRONIC EQUIPMENT – PRODUCT REQUIREMENTS –

Part 8-112: Power connectors – Detail specification for 2-pole snap locking rectangular connectors with IP65/IP67 plastic housing for rated current of 50 A

1 Scope

This part of IEC 61076 describes 2-pole snap locking rectangular power connectors with IP65/IP67 plastic housing, for rated current of 50 A. It includes overall dimensions, interface dimensions, technical characteristics, performance requirements, test methods.

The products covered by this detail specification are connectors with breaking capacity (CBC) according to IEC 61984 which are mainly used in DC power conduction, in the field of electrical and electronic equipment.

2 Normative references

The following documents are referred to in the text in such a way that some or all of their content constitutes requirements of this document. For dated references, only the edition cited applies. For undated references, the latest edition of the referenced document (including any amendments) applies.

IEC 60050-581, *International Electrotechnical Vocabulary (IEV) – Part 581: Electromechanical components for electronic equipment*

IEC 60068-1, *Environmental testing – Part 1: General and guidance*

IEC 60228, *Conductors of insulated cables*

IEC 60352, *Solderless connections (all parts)*

IEC 60512-1-1, *Connectors for electronic equipment – Tests and measurements – Part 1-1: General examination – Test 1a: Visual examination*

IEC 60512-1-2, *Connectors for electronic equipment – Test and measurements – Part 1-2: General examination – Test 1b: Examination of dimension and mass*

IEC 60512-2-1, *Connectors for electronic equipment – Tests and measurements – Part 2-1: Electrical continuity and contact resistance tests – Test 2a: Contact resistance – Millivolt level method*

IEC 60512-2-5, *Connectors for electronic equipment – Tests and measurements – Part 2-5: Electrical continuity and contact resistance tests – Test 2e: Contact disturbance*

IEC 60512-3-1, *Connectors for electronic equipment – Tests and measurements – Part 3-1: Insulation tests – Test 3a: Insulation resistance*

IEC 60512-4-1, *Connectors for electronic equipment – Tests and measurements – Part 4-1: Voltage stress tests – Test 4a: Voltage proof*

Documents
Document Sharing Hub

Full document details: BS IEC 61076-8-112:2025

IEC 60512-5-1, *Connectors for electronic equipment – Tests and measurements – Part 5-1: Current-carrying capacity tests – Test 5a: Temperature rise*

IEC 60512-5-2, *Connectors for electronic equipment – Tests and measurements – Part 5-2: Current-carrying capacity tests – Test 5b: Current-temperature derating*

IEC 60512-6-3, *Connectors for electronic equipment – Tests and measurements – Part 6-3: Dynamic stress tests – Test 6c: Shock*

IEC 60512-6-4, *Connectors for electronic equipment – Tests and measurements – Part 6-4: Dynamic stress tests – Test 6d: Vibration (sinusoidal)*

IEC 60512-7-2, *Connectors for electronic equipment – Tests and measurements – Part 7-2: Impact tests (free components) – Test 7b: Mechanical strength impact*

IEC 60512-9-1, *Connectors for electronic equipment – Tests and measurements – Part 9-1: Endurance tests – Test 9a: Mechanical operation*

IEC 60512-9-2, *Connectors for electronic equipment – Tests and measurements – Part 9-2: Endurance tests – Test 9b: Electrical load and temperature*

IEC 60512-11-1, *Connectors for electrical and electronic equipment – Tests and measurements – Part 11-1: Climatic tests – Test 11a – Climatic sequence*

IEC 60512-11-3, *Connectors for electronic equipment – Tests and measurements – Part 11-3: Climatic tests – Test 11c: Damp heat, steady state*

IEC 60512-11-4, *Connectors for electronic equipment – Tests and measurements – Part 11-4: Climatic tests – Test 11d: Rapid change of temperature*

IEC 60512-11-6, *Connectors for electronic equipment – Tests and measurements – Part 11-6: Climatic tests – Test 11f: Corrosion, salt mist*

IEC 60512-11-9, *Connectors for electronic equipment – Tests and measurements – Part 11-9: Climatic tests – Test 11i: Dry heat*

IEC 60512-11-10, *Connectors for electronic equipment – Tests and measurements – Part 11-10: Climatic tests – Test 11j: Cold*

IEC 60512-11-12, *Connectors for electronic equipment – Tests and measurements – Part 11-12: Climatic tests – Test 11m: Damp heat, cyclic*

IEC 60512-13-1, *Connectors for electronic equipment – Tests and measurements – Part 13-1: Mechanical operation tests –Test 13a: Engaging and separating forces*

IEC 60512-15-1, *Connectors for electronic equipment – Tests and measurements – Part 15-1: Connector tests (mechanical) – Test 15a: Contact retention in insert*

IEC 60512-15-6, *Connectors for electronic equipment – Tests and measurements – Part 15-6: Connector tests (mechanical) – Test 15f: Effectiveness of connector coupling devices*

IEC 60512-16-5, *Connectors for electronic equipment – Tests and measurements – Part 16-5: Mechanical tests on contacts and terminations – Test 16e: Gauge retention force (resilient contacts)*

Documents
Document Sharing Hub

Full document details: BS IEC 61076-8-112:2025