BS IEC 62104:2015

BSI Standards Publication

Characteristics of DAB receivers

Documents
Document Sharing Hub

Full document details: BS IEC 62104:2015

National foreword

This British Standard is the UK implementation of IEC 62104:2015. It supersedes BS EN 62104:2007, which is withdrawn.

This standard has not been adopted by CENELEC as the standard series has been agreed as exempt from parallel procedure. Therefore, BS EN 62104:2007 has been withdrawn to allow for the publication of BS IEC 62104:2015.

The UK participation in its preparation was entrusted to Technical Committee EPL/100, Audio, video and multimedia systems and equipment.

A list of organizations represented on this committee can be obtained on request to its secretary.

This publication does not purport to include all the necessary provisions of a contract. Users are responsible for its correct application.

© The British Standards Institution 2019
Published by BSI Standards Limited 2019

ISBN 978 0 580 81581 2

ICS 33.160.20

Compliance with a British Standard cannot confer immunity from legal obligations.

This British Standard was published under the authority of the Standards Policy and Strategy Committee on 30 June 2019.

Amendments/corrigenda issued since publication

Date	Text affected

Documents
Document Sharing Hub

Full document details: BS IEC 62104:2015

IEC 62104

Edition 3.0 2015-07

INTERNATIONAL STANDARD

Characteristics of DAB receivers

INTERNATIONAL
ELECTROTECHNICAL
COMMISSION

ICS 33.060.20

ISBN 978-2-8322-2812-8

Warning! Make sure that you obtained this publication from an authorized distributor.

® Registered trademark of the International Electrotechnical Commission

Documents
Document Sharing Hub

Full document details: BS IEC 62104:2015

CONTENTS

FOREWORD 6
1 Scope 8
2 Normative references 8
3 Terms and definitions 10
4 Basic implementation and functional performance requirements 13
4.1 Automatic mode selection 13
4.1.1 General 13
4.1.2 Requirements 13
4.2 Frequency bands 13
4.3 Channel decoder 13
4.3.1 Standard receiver 13
4.3.2 Multimedia receiver 13
4.4 Service selection 13
4.4.1 General 13
4.4.2 Requirements 14
4.5 Receiver reactions to a multiplex reconfiguration 14
4.6 Audio decoder 14
4.6.1 General 14
4.6.2 DAB services 15
4.6.3 DAB+ services 15
4.7 Automatic switching to another ensemble 15
4.8 Response to conditional access (CA) services 15
4.8.1 General 15
4.8.2 Requirements for DAB receivers without CA capabilities 15
4.9 Output for audio and other services 15
4.9.1 General 15
4.9.2 Requirements 16
4.10 Display 16
4.10.1 Standard receiver 16
4.10.2 Multimedia receiver 16
4.11 Text labels 16
4.11.1 Standard receiver 16
4.11.2 Multimedia receiver 16
4.12 Data applications 17
4.12.1 Standard receiver 17
4.12.2 Multimedia receiver 17
5 Interfaces 17
5.1 General 17
5.2 RF input 17
5.2.1 General 17
5.2.2 Domestic and portable receivers 17
5.2.3 Automotive receivers 18
5.3 Analogue audio interface (see IEC 61938) 19
5.4 Digital audio interface (see IEC 60958-3) 19
6 Options 19
6.1 General 19

AVA Documents
Document Sharing Hub

6.2 Service lists 19
6.3 Display 20
6.3.1 General 20
6.3.2 Service labels and service component labels 20
6.3.3 Dynamic label 20
6.3.4 Signal quality indicator 20
6.3.5 Audio coding information 20
6.4 Other receiver features 21
6.4.1 Time and date 21
6.4.2 Service following 21
6.4.3 Announcements 21
6.4.4 Dynamic range control (DRC) 21
6.5 Data features 21
6.5.1 Journaline 21
6.5.2 Broadcast website (BWS) 22
6.5.3 TPEG services 22
7 Minimum performance levels and measuring methods 22
7.1 General conditions 22
7.1.1 General – Published specifications for receivers 22
7.1.2 Power supply 22
7.1.3 Atmospheric conditions 22
7.1.4 BER measurement conditions 22
7.1.5 Acoustic onset of impairment (OOI) measurement conditions 23
7.1.6 DAB signal 23
7.1.7 Receiver classification 23
7.2 Audio part – Performance requirements 24
7.2.1 General 24
7.2.2 DAB services 24
7.2.3 DAB+ services 24
7.3 RF part – Sensitivity test methods 24
7.3.1 General 24
7.3.2 Baseband stream and RF conditions for BER and OOI testing 24
7.3.3 Baseband stream and listening conditions for acoustic OOI testing 24
7.4 Sensitivity requirement using a conducted signal at node “A” 25
7.4.1 General 25
7.4.2 Method of measurement (Gaussian channel) using BER 25
7.4.3 Presentation of results using BER 25
7.4.4 Requirements – Receiver types A2, C2, D, E2 using BER 26
7.4.5 Method of measurement (Gaussian channel) using acoustic OOI 26
7.4.6 Presentation of results using acoustic OOI 26
7.4.7 Requirements – Receiver types A2, C2, D, E2 using acoustic OOI 26
7.5 Sensitivity using radiated electromagnetic wave at node "N" 27
7.5.1 General 27
7.5.2 Link budget transmission assumption – Non-automotive receivers 27
7.5.3 Method of measurement – Non-automotive types A1, B, C1. C2 and A2 with optional antenna 27
7.5.4 Presentation of results 29
7.5.5 Requirements – Types A1, B, C1, C2 and A2 with optional antenna 29
7.5.6 Link budget transmission assumption – Automotive types D, E1, E2 29

AVA Documents
Document Sharing Hub
Full document details: BS IEC 62104:2015

7.6 RF part – Maximum input power 29
7.6.1 General 29
7.6.2 Method of measurement (Gaussian channel) 29
7.6.3 Presentation of results 29
7.6.4 Requirements 29
7.7 RF part – Selectivity 30
7.7.1 General 30
7.7.2 Adjacent channel selectivity 30
7.7.3 Rejection of unwanted signals (far-off selectivity) 32
7.8 RF part – Performance in a Rayleigh channel 33
7.8.1 General 33
7.8.2 Sensitivity 33
7.8.3 Method of measurement – Conducted input signal only 33
7.8.4 Presentation of results 35
7.8.5 Requirements 35
7.9 RF part – Acquisition time after synchronization loss 35
7.9.1 General 35
7.9.2 Method of measurement 35
7.9.3 Presentation of results 36
7.9.4 Requirements 36
Annex A (informative) Recommended centre frequencies 37
Annex B (normative) Characteristics of a Rayleigh channel 39
B.1 Simulation of the mobile radio channel 39
B.2 Doppler spectrum types 39
B.2.1 General 39
B.2.2 Doppler spectrum: CLASS 40
B.2.3 Doppler spectrum: GAUS1 40
B.2.4 Doppler spectrum: GAUS2 40
B.2.5 Doppler spectrum: GAUSDAB 40
B.2.6 Doppler spectrum: RICE 40
B.3 Propagation models 40
B.3.1 General 40
B.3.2 Typical rural (non-hilly) area (RA) 41
B.3.3 Typical urban (non-hilly) area (TU) 41
B.4 Tap setting for hardware simulators 42
Annex C (informative) Basic characteristics and functionality for accessibility for blind and visually impaired users 44
Bibliography 45

Figure 1 – Example of a functional block diagram of a DAB receiver 12
Figure 2 – Block diagram for the measurement of the sensitivity and the maximum input power, using BER 25
Figure 3 – Block diagram for the measurement of the sensitivity and the maximum input power, using acoustic OOI 26
Figure 4 – Block diagram for the measurement of free field sensitivity 27
Figure 5 – Free field screened chamber measurement – Features and setup 28
Figure 6 – Spectrum mask of the DAB signal for selectivity measurements 30
Figure 7 – Block diagram for BER method selectivity measurements 31

AVA Documents
Document Sharing Hub
Full document details: BS IEC 62104:2015

Figure 8 – Block diagram for OOI method selectivity measurements 32
Figure 9 – Block diagram for measuring the performance in a Rayleigh channel 34
Figure 10 – Block diagram for measuring acquisition time after synchronization loss 35
Figure B.1 – Continuous delay power profile $P(\tau)$ for RA 41
Figure B.2 – Continuous delay power profile $P(\tau)$ for TU 41

Table 1 – Performance requirement for an automotive active antenna 18
Table 2 – Classification of receiver types 23
Table 3 – Conditions for BER and OOI testing 24
Table 4 – Conditions for acoustic OOI testing 25
Table 5 – Conditions for uniform signal level 28
Table 6 – Minimum requirements for maximum input power (conducted) 30
Table 7 – Difference between the centre frequencies of the DAB ensembles 31
Table 8 – Minimum requirement for adjacent channel selectivity 32
Table 9 – Channel simulation profiles related to frequency band and mode 34
Table A.1 – Recommended centre frequencies for DAB *(1 of 2)* 37
Table B.1 – Four tap setting for typical rural (non-hilly) area (RA) 42
Table B.2 – Six tap setting for typical rural (non-hilly) area (RA) 42
Table B.3 – Twelve tap setting for typical urban (non-hilly) area (TU) 43
Table B.4 – Six tap setting for typical urban (non-hilly) area (TU) 43
Table B.5 – Tap setting for single-frequency networks (SFN) in VHF bands 43

Documents
Document Sharing Hub

Full document details: BS IEC 62104:2015

INTERNATIONAL ELECTROTECHNICAL COMMISSION

CHARACTERISTICS OF DAB RECEIVERS

FOREWORD

1) The International Electrotechnical Commission (IEC) is a worldwide organization for standardization comprising all national electrotechnical committees (IEC National Committees). The object of IEC is to promote international co-operation on all questions concerning standardization in the electrical and electronic fields. To this end and in addition to other activities, IEC publishes International Standards, Technical Specifications, Technical Reports, Publicly Available Specifications (PAS) and Guides (hereafter referred to as "IEC Publication(s)"). Their preparation is entrusted to technical committees; any IEC National Committee interested in the subject dealt with may participate in this preparatory work. International, governmental and non-governmental organizations liaising with the IEC also participate in this preparation. IEC collaborates closely with the International Organization for Standardization (ISO) in accordance with conditions determined by agreement between the two organizations.
2) The formal decisions or agreements of IEC on technical matters express, as nearly as possible, an international consensus of opinion on the relevant subjects since each technical committee has representation from all interested IEC National Committees.
3) IEC Publications have the form of recommendations for international use and are accepted by IEC National Committees in that sense. While all reasonable efforts are made to ensure that the technical content of IEC Publications is accurate, IEC cannot be held responsible for the way in which they are used or for any misinterpretation by any end user.
4) In order to promote international uniformity, IEC National Committees undertake to apply IEC Publications transparently to the maximum extent possible in their national and regional publications. Any divergence between any IEC Publication and the corresponding national or regional publication shall be clearly indicated in the latter.
5) IEC itself does not provide any attestation of conformity. Independent certification bodies provide conformity assessment services and, in some areas, access to IEC marks of conformity. IEC is not responsible for any services carried out by independent certification bodies.
6) All users should ensure that they have the latest edition of this publication.
7) No liability shall attach to IEC or its directors, employees, servants or agents including individual experts and members of its technical committees and IEC National Committees for any personal injury, property damage or other damage of any nature whatsoever, whether direct or indirect, or for costs (including legal fees) and expenses arising out of the publication, use of, or reliance upon, this IEC Publication or any other IEC Publications.
8) Attention is drawn to the Normative references cited in this publication. Use of the referenced publications is indispensable for the correct application of this publication.
9) Attention is drawn to the possibility that some of the elements of this IEC Publication may be the subject of patent rights. IEC shall not be held responsible for identifying any or all such patent rights.

International Standard IEC 62104 has been prepared by technical area 1, Terminals for audio,video and data services and contents, of IEC technical committee 100: Audio, video and multimedia systems and equipment.

This third edition cancels and replaces the second edition published in 2003. This edition constitutes a technical revision.

The main changes with respect to the previous edition are as follows.

- The document has been updated in line with the development of the DAB system, and in particular the introduction of DAB+ audio services (see ETSI TS 102 563).[1]
- Requirements for displays, text and data applications have been introduced to reflect market trends.

[1] For an overview of the DAB standards, see ETSI TR 101 495.

Documents
Document Sharing Hub

Full document details: BS IEC 62104:2015

- Additional test methods have been introduced to allow R.F. measurements to be made on receivers with integrated antennas and/or no external BER indicators by using an acoustic impairment method.
- Clause 6 has been updated to reflect the development of the market and to provide better guidance for the implementation of optional features.

The text of this standard is based on the following documents:

FDIS	Report on voting
100/2502/FDIS	100/2541/RVD

Full information on the voting for the approval of this standard can be found in the report on voting indicated in the above table.

This publication has been drafted in accordance with the ISO/IEC Directives, Part 2.

The committee has decided that the contents of this publication will remain unchanged until the stability date indicated on the IEC website under "http://webstore.iec.ch" in the data related to the specific publication. At this date, the publication will be

- reconfirmed,
- withdrawn,
- replaced by a revised edition, or
- amended.

A bilingual version of this publication may be issued at a later date.

Documents
Document Sharing Hub

Full document details: BS IEC 62104:2015

CHARACTERISTICS OF DAB RECEIVERS

1 Scope

This International Standard describes the digital audio broadcasting (DAB) receiver characteristics for consumer equipment intended for terrestrial and cable reception operating in VHF band III. Dedicated receivers for specific applications are not within the scope of this standard. This standard describes the characteristics for different classes and categories of DAB receivers such as standard and multimedia receivers and domestic, automotive and adapter receivers.

2 Normative references

The following documents, in whole or in part, are normatively referenced in this document and are indispensable for its application. For dated references, only the edition cited applies. For undated references, the latest edition of the referenced document (including any amendments) applies.

IEC 60169-10, *Radio-frequency connectors – Part 10: R.F. coaxial connectors with inner diameter of outer conductor 3 mm (0,12 in) with snap-on coupling – Characteristic impedance 50 ohms (Type SMB)*

IEC 60315-1, *Methods of measurement on radio receivers for various classes of emission – Part 1: General considerations and methods of measurement, including audio-frequency measurements*

IEC 60315-4, *Methods of measurement on radio receivers for various classes of emission – Part 4: Receivers for frequency-modulated sound-broadcasting emissions*

IEC 60958-3, *Digital audio interface – Part 3: Consumer applications*

IEC 61169-2:2007, *Radio-frequency connectors – Part 2: Sectional specification – Radio frequency coaxial connectors of type 9,52*

IEC 61169-24, *Radio-frequency connectors – Part 24: Sectional specification – Radio frequency coaxial connectors with screw coupling, typically for use in 75 ohm cable networks (type F)*

IEC 61606 (all parts), *Audio and audiovisual equipment – Digital audio parts – Basic measurement methods of audio characteristics*

IEC 61938, *Multimedia systems – Guide to the recommended characteristics of analogue interfaces to achieve interoperability*

IEC 62106:2009, *Specification of the radio data system (RDS) for VHF/FM sound broadcasting in the frequency range from 87,5 MHz to 108,0 MHz*

ISO/IEC 10646, *Information technology – Universal Coded Character Set (UCS)*

ISO/IEC 11172-3, *Information technology – Coding of moving pictures and associated audio for digital storage media at up to about 1,5 Mbit/s – Part 3: Audio*

Documents
Document Sharing Hub

Full document details: BS IEC 62104:2015

ISO/IEC 13818-3, *Information technology – Generic coding of moving pictures and associated audio information – Part 3: Audio*

ISO/IEC 14496-3 *Information technology – Coding of audio-visual objects – Part 3: Audio*

ISO/IEC 23003-1:2007, *Information technology – MPEG audio technologies – Part 1: MPEG Surround*

ISO 20860-1, *Road vehicles – 50 ohms impedance radio frequency connection system interface – Part 1: Dimensions and electrical requirements*

ETSI EN 300 401:2006, *Radio Broadcasting Systems; Digital Audio Broadcasting (DAB) to mobile, portable and fixed receivers*

ETSI EN 301 234, *Digital Audio Broadcasting (DAB); Multimedia Object Transfer (MOT) protocol*

ETSI TS 101 498, *Digital Audio Broadcasting (DAB); Broadcast Website*

ETSI TS 101 499, *Digital Audio Broadcasting (DAB); SlideShow; User Application Specification*

ETSI TS 101 756, *Digital Audio Broadcasting (DAB); Registered Tables*

ETSI TS 101 757, *Digital Audio Broadcasting System (DAB); Conformance Testing for DAB Audio*

ETSI TS 102 371, *Digital Audio Broadcasting (DAB); Digital Radio Mondiale (DRM); Transportation and Binary Encoding Specification for Service and Programme Information (SPI)*

ETSI TS 102 428, *Digital Audio Broadcasting (DAB); DMB video service; User Application Specification*

ETSI TS 102 563, *Digital Audio Broadcasting (DAB); Transport of Advanced Audio Coding (AAC) audio*

ETSI TS 102 652, *Digital Audio Broadcasting (DAB); Intellitext; Application spe*cification

ETSI TS 102 818, *Hybrid Digital Radio (DAB, DRM, RadioDNS); XML Specification for Service and Programme Information (SPI)*

ETSI TS 102 979, *Digital Audio Broadcasting (DAB); Journaline; User application specification*

ETSI TS 102 980, *Digital Audio Broadcasting (DAB); Dynamic Label Plus (DL Plus); Application specification*

ETSI TS 103 176, *Digital Audio Broadcasting (DAB); Rules of implementation; Service information features*

COST 207, *Digital Land Mobile Radio Communications* – COST 207, Commission of the European Communities, Final Report, 14 March 1984 – 13 September 1988, Office for Official Publications of the European Communities, Luxembourg,1989

Documents
Document Sharing Hub

Full document details: BS IEC 62104:2015

3 Terms and definitions

For the purposes of this document, the following definitions apply. Other definitions, abbreviations and symbols are solely related to DAB unless stated otherwise.

3.1
bit error rate
BER
ratio of the number of bits received inverted to the total number of bits sent

3.2
DAB receiver
receiver intended to receive and decode signals transmitted according to the DAB system specification ETSI EN 300 401

Note 1 to entry: Figure 1 shows an example of a functional block diagram of a DAB receiver according to ETSI EN 300 401 (for information only).

3.3
standard radio receiver
DAB receiver intended to present audio programmes with at least an alphanumeric display

3.4
multimedia receiver
DAB receiver intended to present audio programmes and data applications with a colour display of at least (320 × 240) pixels

3.5
minimum requirement
lowest value that a DAB receiver should fulfil in order to be called a DAB receiver

Note 1 to entry: It takes into account low-cost receivers.

3.6
DAB service
service in which the primary service component is encoded in a stream audio sub-channel according to ETSI EN 300 401:2006, Clause 7

3.7
DAB+ service
service in which the primary service component is encoded in a stream audio sub-channel according to ETSI TS 102 563

3.8
DMB service
service in which the primary service component is encoded in a stream data sub-channel according to ETSI TS 102 428

3.9
data service
service in which the primary service component is encoded in a stream data or packet data sub-channel

3.10
capacity unit
CU
smallest addressable portion of a DAB multiplex

AVA Documents
Document Sharing Hub

Full document details: BS IEC 62104:2015

3.11
dynamic label
DL
text message from the broadcaster for display on receivers

3.12
fast information group
FIG
signalling information from the broadcaster which is used by the receiver

3.13
MPEG surround
system providing mono and stereo compatible coding of surround audio

3.14
onset of impairment
OOI
point at which audio impairments reach a threshold of three per 10 s listening period

Documents
Document Sharing Hub

Full document details: BS IEC 62104:2015

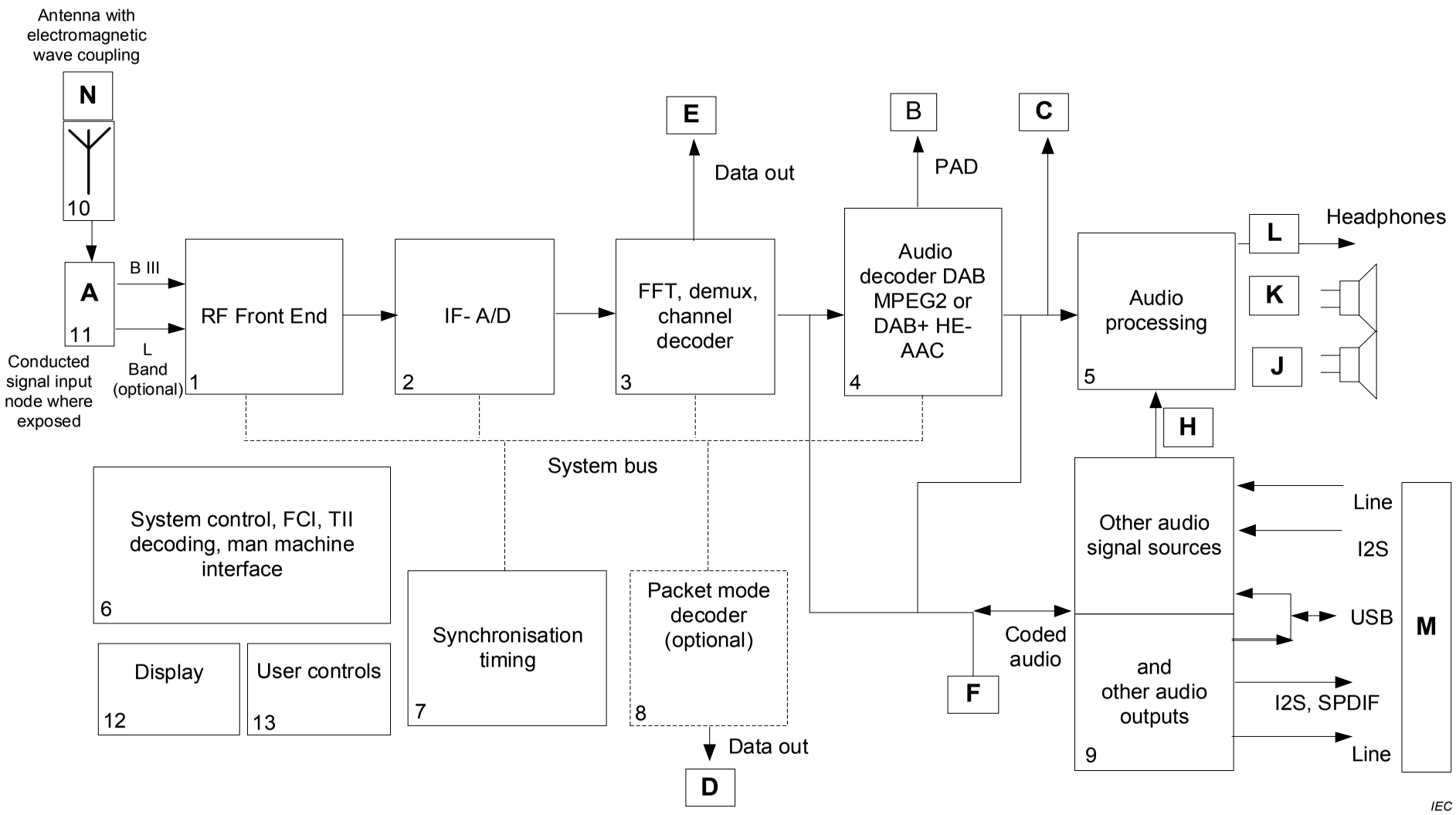

Key The numbers in the corners refer to blocks.

NOTE Block 8 is optional, block 9 is not part of the DAB receiver.

Figure 1 – Example of a functional block diagram of a DAB receiver

Documents
Document Sharing Hub
Full document details: BS IEC 62104:2015

4 Basic implementation and functional performance requirements

4.1 Automatic mode selection

4.1.1 General

Four different transmission modes are defined: modes I, II, III and IV. Radiofrequency characteristics are described in Clause 15 of ETSI EN 300 401:2006.

The modes can be detected by checking the following relevant parameters of the DAB signal: the frame duration, null-symbol duration and carrier spacing.

4.1.2 Requirements

The receiver shall detect the mode of the DAB signal and switch to the appropriate reception mode.

4.2 Frequency bands

The receiver shall provide reception of at least one DAB ensemble, in the following r.f. band:

Band III: 174 MHz to 240 MHz

Cable and other specific requirement receivers may also provide reception in other r.f. bands.

The centre frequencies are given in Annex A. The receiver should be able to correctly deal with transmitter frequency offsets by up to ±1/2 of the carrier spacing.

4.3 Channel decoder

4.3.1 Standard receiver

The channel decoder shall decode at least one sub-channel and shall be capable of decoding:

– when containing a DAB service, at least 280 capacity units;
– when containing a DAB+ service , at least 144 capacity units.

4.3.2 Multimedia receiver

The channel decoder shall be capable of decoding at least four sub-channels simultaneously and shall be capable of decoding at least 288 capacity units.

4.4 Service selection

4.4.1 General

The main service channel (MSC) and the fast information channel (FIC) carry the components and multiplex configuration information (MCI) respectively of the services which make up a DAB ensemble.

Each service has one or more service components. Several services may be carried in one ensemble. Service components may be audio or data. DAB, DAB+, DMB and data services all may be present in the same ensemble.

A user of a DAB receiver accesses service components by selecting a service. Only services that contain a primary service component that the receiver can decode shall be presented to the user for selection.

Documents
Document Sharing Hub

Full document details: BS IEC 62104:2015