BS IEC 62394:2024

BSI Standards Publication

Service diagnostic interface for consumer electronics products and networks — Implementation for ECHONET

Documents
Document Sharing Hub

Full document details: BS IEC 62394:2024

National foreword

This British Standard is the UK implementation of IEC 62394:2024. It supersedes BS IEC 62394:2022, which is withdrawn.

The UK participation in its preparation was entrusted to Technical Committee EPL/100, Audio-visual equipment.

A list of organizations represented on this committee can be obtained on request to its committee manager.

Contractual and legal considerations

This publication has been prepared in good faith, however no representation, warranty, assurance or undertaking (express or implied) is or will be made, and no responsibility or liability is or will be accepted by BSI in relation to the adequacy, accuracy, completeness or reasonableness of this publication. All and any such responsibility and liability is expressly disclaimed to the full extent permitted by the law.

This publication is provided as is, and is to be used at the recipient's own risk.

The recipient is advised to consider seeking professional guidance with respect to its use of this publication.

This publication is not intended to constitute a contract. Users are responsible for its correct application.

© The British Standards Institution 2024
Published by BSI Standards Limited 2024

ISBN 978 0 539 28054 8

ICS 33.160.99; 35.110

Compliance with a British Standard cannot confer immunity from legal obligations.

This British Standard was published under the authority of the Standards Policy and Strategy Committee on 30 November 2024.

Amendments/corrigenda issued since publication

Date	Text affected

Documents
Document Sharing Hub

Full document details: BS IEC 62394:2024

IEC 62394

Edition 5.0 2024-10

INTERNATIONAL STANDARD

colour inside

Service diagnostic interface for consumer electronics products and networks – Implementation for ECHONET

INTERNATIONAL
ELECTROTECHNICAL
COMMISSION

ICS 33.160.99; 35.110

ISBN 978-2-8322-9678-3

Warning! Make sure that you obtained this publication from an authorized distributor.

® Registered trademark of the International Electrotechnical Commission

Documents
Document Sharing Hub

Full document details: BS IEC 62394:2024

CONTENTS

FOREWORD ... 33
INTRODUCTION ... 35
1 Scope ... 36
2 Normative references ... 36
3 Terms, definitions and abbreviated terms ... 36
3.1 Terms and definitions ... 36
3.2 Abbreviated terms ... 37
4 Different types of service diagnostics ... 38
4.1 Stand-alone products ... 38
4.2 Facilities or household appliances network ... 38
4.3 Remote diagnosis ... 38
5 SDI requirements ... 38
5.1 General ... 38
5.2 Hardware ... 38
5.2.1 Tester hardware ... 38
5.2.2 Facilities or household appliances network ... 38
5.2.3 DUT hardware ... 38
5.3 Software ... 39
5.3.1 General ... 39
5.3.2 Tester software ... 39
5.3.3 DUT software requirements for the SDI ... 39
6 Tester software requirements ... 39
6.1 Reading the property diagnostic unit ... 39
6.2 General information (product identification) ... 40
6.3 Diagnosis information ... 40
7 Control protocol 1st ... 40
7.1 General ... 40
7.2 Frame format ... 40
7.2.1 General ... 40
7.2.2 ECHONET headers (EHD) ... 41
7.2.3 Source/Destination ECHONET address (SEA/DEA) ... 43
7.2.4 ECHONET byte counter (EBC) ... 44
7.2.5 ECHONET data (EDATA) ... 44
7.2.6 Object message header (OHD) ... 44
7.2.7 ECHONET objects (EOJ) ... 45
7.2.8 ECHONET property (EPC) ... 46
7.2.9 ECHONET service (ESV) ... 47
7.2.10 ECHONET property value data (EDT) ... 62
7.2.11 Compound ECHONET Service (CpESV) ... 62
7.2.12 Processing target property counter (OPC) ... 68
7.2.13 Property data counter (PDC) ... 69
8 Control protocol 2nd ... 69
8.1 General ... 69
8.2 Frame format ... 69
8.2.1 General ... 69
8.2.2 ECHONET Lite Header (ELHD) ... 70

AVA Documents
Document Sharing Hub
Full document details: BS IEC 62394:2024

8.2.3 Transaction ID (TID) ... 71
8.2.4 ECHONET Lite Data (ELDATA) ... 71
8.2.5 ECHONET Objects (EOJ) ... 71
8.2.6 ECHONET Lite Service (ELSV) ... 72
8.2.7 ECHONET property (EPC) ... 80
8.2.8 ECHONET Lite Property data counter (ELPDC) ... 81
9 ECHONET objects: detailed specifications ... 82
9.1 Basic concept ... 82
9.2 ECHONET properties: basic specifications ... 83
9.2.1 General ... 83
9.2.2 ECHONET property value data types ... 83
9.2.3 Property value range ... 83
9.2.4 Required class properties ... 84
9.2.5 Array ... 84
9.3 Device object super class specifications ... 85
9.3.1 General ... 85
9.3.2 Overview of device object super class specifications ... 85
9.3.3 Operation status property ... 89
9.3.4 Installation location property ... 89
9.3.5 Standard version information property ... 91
9.3.6 Identification number property ... 91
9.3.7 Measured instantaneous power consumption property ... 92
9.3.8 Measured cumulative energy consumption property ... 92
9.3.9 Manufacturer's fault code property ... 92
9.3.10 Current limit setting property ... 93
9.3.11 Fault status property ... 93
9.3.12 Fault description property ... 93
9.3.13 Manufacturer code property ... 95
9.3.14 Business facility code property ... 95
9.3.15 Product code property ... 96
9.3.16 Production number property ... 96
9.3.17 Production date property ... 96
9.3.18 Power-saving operation setting property ... 96
9.3.19 Remote control setting property ... 96
9.3.20 Current time setting property ... 98
9.3.21 Current date setting property ... 98
9.3.22 Power limit setting property ... 98
9.3.23 Cumulative operating time property ... 98
9.3.24 Property map property ... 99
9.4 Temperature sensor class specifications ... 100
9.4.1 General ... 100
9.4.2 Operation status property ... 100
9.4.3 Measured temperature value property ... 100
9.5 Humidity sensor class specifications ... 100
9.5.1 General ... 100
9.5.2 Operation status property ... 101
9.5.3 Measured value of relative humidity property ... 101
9.6 Illuminance sensor class specifications ... 101
9.6.1 General ... 101

AVA Documents
Document Sharing Hub
Full document details: BS IEC 62394:2024

9.6.2 Operation status property ... 101
9.6.3 Measured illuminance value 1 property ... 101
9.6.4 Measured illuminance value 2 property ... 102
9.7 Human detection sensor class specifications ... 102
9.7.1 General ... 102
9.7.2 Operation status property ... 102
9.7.3 Detection threshold level property ... 102
9.7.4 Human detection status property ... 102
9.8 Electric energy sensor class specifications ... 103
9.8.1 General ... 103
9.8.2 Operation status property ... 104
9.8.3 Cumulative amounts of electric energy property ... 104
9.8.4 Small-capacity sensor instantaneous electric power property ... 104
9.8.5 Medium-capacity sensor instantaneous electric power property ... 104
9.8.6 Large-capacity sensor instantaneous electric power property ... 104
9.8.7 Cumulative amounts of electric energy measurement log property ... 104
9.8.8 Effective voltage value property ... 104
9.9 Open/close sensor class specifications ... 105
9.9.1 General ... 105
9.9.2 Operation status property ... 105
9.9.3 Degree-of-opening detection status 1 property ... 105
9.9.4 Detection threshold level property ... 106
9.9.5 Degree-of-opening detection status 2 property ... 106
9.10 Current sensor class specifications ... 106
9.10.1 General ... 106
9.10.2 Operation status property ... 106
9.10.3 Measured current value 1 property ... 107
9.10.4 Rated voltage property to be measured property ... 107
9.10.5 Measured current value 2 property ... 107
9.11 Air speed sensor class specifications ... 107
9.11.1 General ... 107
9.11.2 Operation status property ... 107
9.11.3 Measured value of air speed property ... 108
9.11.4 Air flow direction property ... 108
9.12 Water flow rate sensor class specifications ... 108
9.12.1 General ... 108
9.12.2 Operation status property ... 108
9.12.3 Cumulative flow rate property ... 108
9.12.4 Flow rate property ... 109
9.13 Rain sensor class specifications ... 109
9.13.1 General ... 109
9.13.2 Operation status property ... 109
9.13.3 Detection threshold level property ... 109
9.13.4 Rain detection status property ... 109
9.14 Home air conditioner class specifications ... 110
9.14.1 General ... 110
9.14.2 Operation status property ... 119
9.14.3 Power-saving operation setting property ... 120
9.14.4 Operation mode setting property ... 121

AVA Documents
Document Sharing Hub
Full document details: BS IEC 62394:2024

9.14.5 Automatic temperature control setting property ... 120
9.14.6 Normal/high-speed/silent operation setting property ... 120
9.14.7 Set temperature value property ... 120
9.14.8 Set value of relative humidity in dehumidifying mode property ... 121
9.14.9 Set temperature value in cooling mode property ... 121
9.14.10 Set temperature value in heating mode property ... 121
9.14.11 Set temperature value in dehumidifying mode property ... 121
9.14.12 Rated power consumption property ... 122
9.14.13 Measured value of current consumption property ... 122
9.14.14 Measured value of room relative humidity property ... 122
9.14.15 Measured value of room temperature property ... 122
9.14.16 Set temperature value of user remote control property ... 122
9.14.17 Measured cooled air temperature property ... 123
9.14.18 Measured outdoor air temperature property ... 123
9.14.19 Relative temperature setting property ... 123
9.14.20 Air flow rate setting property ... 123
9.14.21 Automatic control of air flow direction setting property ... 123
9.14.22 Automatic swing of air flow setting property ... 124
9.14.23 Air flow direction (vertical) setting property ... 124
9.14.24 Air flow direction (horizontal) setting property ... 124
9.14.25 Special state property ... 125
9.14.26 Non-priority state property ... 126
9.14.27 Ventilation function setting property ... 126
9.14.28 Humidifier function setting property ... 126
9.14.29 Ventilation air flow rate setting property ... 126
9.14.30 Degree of humidification setting property ... 127
9.14.31 Mounted air cleaning method property ... 127
9.14.32 Air purifier function setting property ... 127
9.14.33 Mounted air refresh method property ... 128
9.14.34 Air refresher function setting property ... 129
9.14.35 Mounted self-cleaning method property ... 129
9.14.36 Self-cleaning function setting property ... 130
9.14.37 Special function setting property ... 131
9.14.38 Operation status of components property ... 131
9.14.39 Thermostat setting override function property ... 132
9.14.40 Air purification mode setting property ... 132
9.14.41 Buzzer property ... 132
9.14.42 ON timer-based reservation setting property ... 132
9.14.43 ON timer setting (time) property ... 133
9.14.44 ON timer setting (relative time) ... 133
9.14.45 OFF timer-based reservation setting property ... 133
9.14.46 OFF timer setting (time) property ... 133
9.14.47 OFF timer setting (relative time) property ... 133
9.15 Ventilation fan class specifications ... 134
9.15.1 General ... 134
9.15.2 Operation status property ... 134
9.15.3 Ventilation automatic setting property ... 134
9.15.4 Set value of ventilation air flow rate property ... 134
9.16 Air purifier class specifications ... 134

AVA Documents
Document Sharing Hub
Full document details: BS IEC 62394:2024

9.16.1 General ... 135
9.16.2 Operation status property ... 135
9.16.3 Filter change notice property ... 136
9.16.4 Air flow rate setting property ... 136
9.16.5 Smoke (cigarette) detection status property ... 136
9.16.6 Optical catalyst operation setting property ... 136
9.16.7 Air pollution detection status property ... 136
9.17 Humidifier class specifications ... 136
9.17.1 General ... 136
9.17.2 Operation status property ... 138
9.17.3 Humidifying setting 1 property ... 138
9.17.4 Humidifying setting 2 property ... 138
9.17.5 Measured value of relative humidity property ... 138
9.17.6 Reservation setting of OFF timer property ... 138
9.17.7 Relative time value set of OFF timer property ... 139
9.17.8 Ion emission setting property ... 139
9.17.9 Implemented ion emission method property ... 139
9.17.10 Special operation mode setting property ... 139
9.17.11 Water amount level property ... 139
9.18 Package-type commercial air conditioner (indoor unit) class specifications ... 140
9.18.1 General ... 140
9.18.2 Operation status property ... 141
9.18.3 Operation mode setting property ... 141
9.18.4 Temperature setting property ... 142
9.18.5 Measured indoor unit temperature property ... 142
9.18.6 Thermostat state property ... 142
9.18.7 Current function (automatic operation mode) property ... 142
9.18.8 Group information property ... 142
9.18.9 Power consumption range for indoor units property ... 143
9.19 Package-type commercial air conditioner (outdoor unit) class specifications ... 143
9.19.1 General ... 143
9.19.2 Operation status property ... 144
9.19.3 Rated power consumption of outdoor unit property ... 144
9.19.4 Measured outdoor unit temperature property ... 144
9.19.5 Special state property ... 145
9.19.6 Group information property ... 145
9.19.7 Measured power consumption of outdoor unit property ... 145
9.19.8 Possible power savings for outdoor units property ... 145
9.19.9 Settings restricting power consumption of outdoor units property ... 145
9.19.10 Minimum power consumption for restricted outdoor unit property ... 146
9.20 Electric storage heater class specifications ... 146
9.20.1 General ... 146
9.20.2 Operation status property ... 149
9.20.3 Temperature setting property ... 149
9.20.4 Rated power consumption property ... 149
9.20.5 Measured indoor temperature property ... 149
9.20.6 Measured outdoor temperature property ... 150
9.20.7 Air flow rate setting property ... 150
9.20.8 Fan operation status property ... 150

AVA Documents
Document Sharing Hub
Full document details: BS IEC 62394:2024

9.20.9 Heat storage operation status property ... 150
9.20.10 Heat storage temperature setting property ... 150
9.20.11 Measured stored heat temperature property ... 150
9.20.12 Daytime heat storage setting property ... 151
9.20.13 Daytime heat storage ability property ... 151
9.20.14 Midnight power duration setting property ... 151
9.20.15 Midnight power start time setting property ... 151
9.20.16 Radiation method property ... 151
9.20.17 Child lock setting property ... 151
9.20.18 Fan timer 1 setting property ... 151
9.20.19 Fan timer 1 ON time setting property ... 152
9.20.20 Fan timer 1 OFF time setting property ... 152
9.20.21 Fan timer 2 setting property ... 152
9.20.22 Fan timer 2 ON time setting property ... 152
9.20.23 Fan timer 2 OFF time setting property ... 152
9.21 Gas heat pump-type commercial air conditioner (indoor unit) class specifications ... 152
9.21.1 General ... 152
9.21.2 Operation status property ... 154
9.21.3 Operation mode setting property ... 154
9.21.4 Temperature setting value property ... 154
9.21.5 Measured temperature value of indoor unit property ... 154
9.21.6 Thermo status property ... 154
9.21.7 Operation mode status during automatic operation property ... 154
9.21.8 Group information property ... 155
9.21.9 Power consumption range for indoor units property ... 155
9.22 Gas heat pump-type commercial air conditioner (outdoor unit) class specifications ... 155
9.22.1 General ... 155
9.22.2 Operation status (inherited from the super class property) property ... 157
9.22.3 Measured temperature value of outdoor unit property ... 157
9.22.4 Measured cumulative gas consumption property ... 157
9.22.5 Group information property ... 157
9.22.6 Time slot operation factor setting property ... 157
9.22.7 Allowable operation factor property ... 158
9.23 Range hood class specifications ... 158
9.23.1 General ... 158
9.23.2 Operation status property ... 161
9.23.3 Range hood automatic setting property ... 161
9.23.4 Ventilation air flow rate setting property ... 161
9.23.5 Lighting operation setting property ... 161
9.23.6 Light source colour setting property ... 161
9.23.7 Brightness level setting property ... 161
9.23.8 Lighting mode setting property ... 162
9.23.9 When in coloured lighting mode RGB setting property ... 162
9.23.10 Measured value of indoor temperature property ... 162
9.23.11 Measured value of outdoor temperature property ... 162
9.23.12 Measured value of supply air temperature property ... 162
9.23.13 Measured value of cooking temperature property ... 163

AVA Documents
Document Sharing Hub
Full document details: BS IEC 62394:2024

9.23.14 Measured value of indoor relative humidity property 163
9.23.15 Measured value of outdoor air humidity property 163
9.23.16 Human detection threshold level setting property 163
9.23.17 Human detection status property 163
9.23.18 Measured value of CO_2 concentration property 163
9.23.19 Gas detection threshold level setting property 163
9.23.20 Gas detection status property 164
9.23.21 Error detection mode property 164
9.24 Electrically operated shade class specifications 164
9.24.1 General 164
9.24.2 Operation status property 167
9.24.3 Fault description property 167
9.24.4 Timer operation setting property 167
9.24.5 Wind detection status property 167
9.24.6 Sunlight detection status property 167
9.24.7 Opening (extension) speed setting property 167
9.24.8 Closing (retraction) speed setting property 167
9.24.9 Operation time property 168
9.24.10 Automatic operation setting property 168
9.24.11 Open/close (extension/retraction) operation setting property 168
9.24.12 Degree-of-opening property 168
9.24.13 Shade angle setting property 168
9.24.14 Open/close (extension/retraction) speed property 168
9.24.15 Electric lock setting property 168
9.24.16 Remote operation setting status property 169
9.24.17 Selective opening (extension) operation setting property 169
9.24.18 Open/closed (extended/retracted) status property 169
9.24.19 One-time opening (extension) speed setting property 169
9.24.20 One-time closing (retraction) speed setting property 169
9.25 Electrically operated rain sliding door/shutter class specifications 169
9.25.1 General 169
9.25.2 Operation status property 172
9.25.3 Fault description property 172
9.25.4 Timer operation setting property 172
9.25.5 Opening speed setting property 172
9.25.6 Closing speed setting property 172
9.25.7 Operation time setting property 172
9.25.8 Open/close operation setting property 172
9.25.9 Degree-of-opening setting property 172
9.25.10 Blind angle setting property 173
9.25.11 Opening/closing speed setting property 173
9.25.12 Electric lock setting property 173
9.25.13 Remote operation setting status property 173
9.25.14 Selective degree-of-opening setting property 173
9.25.15 Open/closed status property 173
9.25.16 Slit degree-of-opening property 173
9.25.17 One-time opening speed setting property 174
9.25.18 One-time closing speed setting property 174
9.26 Electric water heater class specifications 174

AVA Documents
Document Sharing Hub

9.26.1 General ... 174
9.26.2 Operation status property ... 181
9.26.3 Automatic water heating setting property ... 181
9.26.4 Automatic water temperature control setting property ... 181
9.26.5 Water heater status property ... 182
9.26.6 Water heating temperature setting property ... 182
9.26.7 Manual water heating stop days setting property ... 182
9.26.8 Relative time setting value for manual water heating OFF property ... 182
9.26.9 Tank operation mode setting property ... 182
9.26.10 Daytime reheating permission setting property ... 182
9.26.11 Measured temperature of water in water heater property ... 182
9.26.12 Alarm status property ... 182
9.26.13 Hot water supply status property ... 183
9.26.14 Relative time setting for keeping bath temperature property ... 183
9.26.15 Temperature of supplied water setting property ... 183
9.26.16 Bath water temperature setting property ... 183
9.26.17 Hot water volume setting property ... 184
9.26.18 Measured amount of water remaining in tank property ... 184
9.26.19 Tank capacity property ... 184
9.26.20 Automatic bath water heating mode setting property ... 184
9.26.21 Manual bath reheating operation setting property ... 184
9.26.22 Manual bath hot water addition function setting property ... 184
9.26.23 Manual lukewarm water temperature lowering function setting property ... 184
9.26.24 Bath water volume setting 1 property ... 185
9.26.25 Bath water volume setting 2 property ... 185
9.26.26 Bathroom priority setting property ... 185
9.26.27 Bath operation status monitor property ... 185
9.26.28 Bath water volume setting 3 property ... 185
9.26.29 Bath water volume setting 4 property ... 185
9.26.30 Bath water volume setting 4 – Maximum settable level property ... 186
9.26.31 Sound volume setting property ... 186
9.26.32 Mute setting property ... 186
9.26.33 Remaining hot water volume property ... 186
9.26.34 Surplus electric energy prediction value property ... 186
9.26.35 Rated power consumption of HP unit in wintertime property ... 187
9.26.36 Rated power consumption of HP unit in in-between seasons property ... 187
9.26.37 Rated power consumption of HP unit in summertime property ... 187
9.26.38 ON timer reservation setting property ... 187
9.26.39 ON timer setting property ... 187
9.26.40 Participation in energy shift property ... 187
9.26.41 Standard time to start heating property ... 188
9.26.42 Number of energy shifts property ... 189
9.26.43 Daytime heating shift time 1 property (D1 of Figure 63 and D1 of Figure 64) ... 189
9.26.44 Expected electric energy at daytime heating shift time 1 property (C1 of Figure 63 and C1 of Figure 64) ... 189
9.26.45 Consumption of electric energy per hour 1 property ... 190
9.26.46 Daytime heating shift time 2 property (D2 of Figure 63 and D2 of Figure 64) ... 190

AVA Documents
Document Sharing Hub

9.26.47 Expected electric energy at daytime heating shift time 2 property (C2 of Figure 64) ... 191
9.26.48 Consumption of electric energy per hour 2 property ... 191
9.27 Electric toilet seat class (warm-water washing toilet seat, heating toilet seat, etc.) specifications ... 193
9.27.1 General ... 193
9.27.2 Operation status property ... 195
9.27.3 Temperature level of toilet seat property ... 195
9.27.4 Heater setting of toilet seat property ... 195
9.27.5 Temporal halt setting of toilet seat heating property ... 195
9.27.6 Temporal halt start time of toilet seat heating property ... 195
9.27.7 Temporal halt time duration of toilet seat heating property ... 195
9.27.8 Temperature level setting of room heating property ... 196
9.27.9 Room heating setting property ... 196
9.27.10 Room heating status property ... 196
9.27.11 Start time of room heating property ... 196
9.27.12 Duration time of room heating property ... 196
9.27.13 Special operation mode setting property ... 196
9.27.14 Human detection status property ... 196
9.27.15 Seating detection status property ... 196
9.28 Electric lock class specifications ... 197
9.28.1 General ... 197
9.28.2 Operation status property ... 198
9.28.3 Lock setting 1 property ... 198
9.28.4 Lock setting 2 property ... 198
9.28.5 Lock status of door guard property ... 198
9.28.6 Door open/closed status property ... 198
9.28.7 Occupant/non-occupant status property ... 198
9.28.8 Alarm status property ... 198
9.28.9 Automatic lock mode setting property ... 198
9.28.10 Battery level property ... 199
9.29 Instantaneous water heater class specifications ... 199
9.29.1 General ... 199
9.29.2 Operation status property ... 202
9.29.3 Water heating status property ... 202
9.29.4 Set value of hot water temperature property ... 202
9.29.5 Hot water warmer setting property ... 202
9.29.6 Duration of automatic operation setting property ... 202
9.29.7 Remaining automatic operation time property ... 203
9.29.8 Set value of bath temperature property ... 203
9.29.9 Bath water heater status property ... 203
9.29.10 Bath automatic mode setting property ... 203
9.29.11 Bath additional boil-up operation setting property ... 203
9.29.12 Bath hot water adding operation setting property ... 204
9.29.13 Bath water temperature lowering operation setting property ... 204
9.29.14 Bath hot water volume setting 1 property ... 204
9.29.15 Bath hot water volume setting 2 property ... 204
9.29.16 Bath hot water volume setting 3 property ... 204
9.29.17 Bath hot water volume setting 4 property ... 204

AVA Documents
Document Sharing Hub
Full document details: BS IEC 62394:2024

9.29.18 Bath hot water volume setting 4 – Maximum settable level property 205
9.29.19 Bathroom priority setting property 205
9.29.20 Shower hot water supply status property 205
9.29.21 Kitchen hot water heating status property 205
9.29.22 Hot water warmer ON timer reservation setting property 205
9.29.23 Bath operation status monitor property 205
9.29.24 Set value of hot water warmer ON timer time property 205
9.29.25 ON timer reservation setting property 206
9.29.26 Set value of ON timer time property 206
9.29.27 Set value of ON timer relative time property 206
9.29.28 Sound volume setting property 206
9.29.29 Mute setting property 206
9.30 Bathroom heater and dryer class specifications 207
9.30.1 General 207
9.30.2 Operation status property 211
9.30.3 Operation setting property 211
9.30.4 Ventilation operation setting property 212
9.30.5 Bathroom pre-warmer operation setting property 212
9.30.6 Bathroom heater operation setting property 212
9.30.7 Bathroom dryer operation setting property 213
9.30.8 Cool air circulation operation setting property 213
9.30.9 Mist sauna operation setting property 214
9.30.10 Water mist operation settings property 214
9.30.11 Measured relative bathroom humidity property 214
9.30.12 Measured bathroom temperature property 215
9.30.13 Human body detection status property 215
9.30.14 Filter cleaning reminder sign setting property 215
9.30.15 Ventilation air flow rate setting property 215
9.30.16 ON timer-based reservation setting 1 property 215
9.30.17 ON timer-based reservation setting 2 property 216
9.30.18 ON timer setting (time) property 216
9.30.19 ON timer setting (relative time) property 216
9.30.20 OFF timer-based reservation setting property 216
9.30.21 OFF timer setting (time) property 217
9.30.22 OFF timer setting (relative time) property 217
9.31 Household solar power generation class specifications 217
9.31.1 General 217
9.31.2 Operation status property 224
9.31.3 Identification number property 224
9.31.4 Current time setting property 224
9.31.5 Current date setting property 225
9.31.6 Output power control setting 1 property 225
9.31.7 Output power control setting 2 property 225
9.31.8 Function to control purchase of excess electricity setting property 225
9.31.9 Output power controlling schedule property 225
9.31.10 Next access date and time property 226
9.31.11 Type for function to control purchase of excess electricity property 226
9.31.12 Output power change time setting value property 226
9.31.13 Upper limit clip setting value property 226

AVA Documents
Document Sharing Hub
Full document details: BS IEC 62394:2024

9.31.14 Operation power factor setting value property ... 226
9.31.15 FIT contract type property ... 226
9.31.16 Self-consumption type property ... 226
9.31.17 Capacity approved by equipment property ... 227
9.31.18 Conversion coefficient property ... 227
9.31.19 System interconnection status property ... 227
9.31.20 Output power restraint status property ... 227
9.31.21 Measured instantaneous amount of electricity generated property ... 228
9.31.22 Measured cumulative amount of electricity generated property ... 228
9.31.23 Resetting cumulative amount of electric energy generated property ... 228
9.31.24 Measured cumulative amount of electric energy sold property ... 228
9.31.25 Resetting cumulative amount of electric energy sold property ... 228
9.31.26 Power generation output limit setting 1 property ... 228
9.31.27 Power generation output limit setting 2 property ... 228
9.31.28 Limit setting for the amount of electricity sold property ... 228
9.31.29 Rated power generation output (system interconnected) property ... 228
9.31.30 Rated power generation output (independent) property ... 229
9.32 Floor heater class specifications ... 229
9.32.1 General ... 229
9.32.2 Operation status property ... 231
9.32.3 Measured instantaneous power consumption property ... 231
9.32.4 Measured cumulative energy consumption property ... 231
9.32.5 Temperature setting 1 property ... 232
9.32.6 Temperature setting 2 property ... 232
9.32.7 Temperature setting 2 – Maximum settable level property ... 232
9.32.8 Measured room temperature property ... 232
9.32.9 Measured floor temperature property ... 233
9.32.10 Zone change setting property ... 233
9.32.11 Special operation setting property ... 233
9.32.12 Daily timer setting property ... 233
9.32.13 Daily timer setting 1 property / Daily timer setting 2 property ... 233
9.32.14 Rated power consumption property ... 234
9.32.15 Power consumption measurement method property ... 235
9.32.16 ON timer reservation setting property ... 235
9.32.17 Time set by ON timer property ... 235
9.32.18 Relative ON timer setting property ... 235
9.32.19 OFF timer reservation setting property ... 235
9.32.20 Time set by OFF timer property ... 236
9.32.21 Relative OFF timer setting property ... 236
9.33 Fuel cell class specifications ... 236
9.33.1 General ... 236
9.33.2 Operation status property ... 238
9.33.3 Measured temperature of water in water heater property ... 238
9.33.4 Rated power generation output property ... 239
9.33.5 Heating value of hot water storage tank property ... 239
9.33.6 Measured instantaneous power generation output property ... 239
9.33.7 Measured cumulative energy generation output property ... 239
9.33.8 Cumulative energy generation output reset setting property ... 239
9.33.9 Measured instantaneous gas consumption property ... 239

AVA Documents
Document Sharing Hub
Full document details: BS IEC 62394:2024

9.33.10 Measured cumulative gas consumption property 239
9.33.11 Cumulative gas consumption reset setting property 239
9.33.12 Power generation setting property 239
9.33.13 Power generation status property 240
9.33.14 Measured in-house instantaneous power consumption property 240
9.33.15 Measured in-house cumulative energy consumption property 240
9.33.16 In-house cumulative energy consumption reset property 240
9.33.17 System interconnection status property 240
9.33.18 Power generation request time setting property 240
9.33.19 Designated power generation status property 241
9.33.20 Measured remaining hot water amount property 241
9.33.21 Tank capacity property 241
9.34 Storage battery class specifications 241
9.34.1 General 241
9.34.2 Operation status property 252
9.34.3 Identification number property 252
9.34.4 Current time setting property 252
9.34.5 Current date setting property 252
9.34.6 AC effective capacity (charging) property 253
9.34.7 AC effective capacity (discharging) property 253
9.34.8 AC chargeable capacity property 253
9.34.9 AC dischargeable capacity property 253
9.34.10 AC chargeable electric energy property 253
9.34.11 AC dischargeable electric energy property 253
9.34.12 AC charge upper limit setting property 254
9.34.13 AC discharge lower limit setting property 254
9.34.14 AC cumulative charging electric energy property 254
9.34.15 AC cumulative discharging electric energy property 254
9.34.16 AC charge amount target value property 254
9.34.17 AC discharge amount target value property 255
9.34.18 Charging method property 255
9.34.19 Discharging method property 256
9.34.20 Minimum/maximum charging electric power property 258
9.34.21 Minimum/maximum discharging electric power property 258
9.34.22 Minimum/maximum charging current property 258
9.34.23 Minimum/maximum discharging current property 258
9.34.24 Re-interconnection permission setting property 258
9.34.25 Operation permission setting property 259
9.34.26 Independent operation permission setting property 259
9.34.27 Working operation status property 259
9.34.28 AC rated electric energy property 259
9.34.29 Rated electric energy property 259
9.34.30 Rated capacity property 259
9.34.31 Rated voltage property 259
9.34.32 Measured instantaneous charging/discharging electric power property 259
9.34.33 Measured instantaneous charging/discharging current property 260
9.34.34 Measured instantaneous charging/discharging voltage property 260
9.34.35 Measured cumulative discharging electric energy property 260
9.34.36 Measured cumulative discharging electric energy resetting property 260

AVA Documents
Document Sharing Hub
Full document details: BS IEC 62394:2024

9.34.37 Measured cumulative charging electric energy property 260
9.34.38 Measured cumulative charging electric energy reset setting property 260
9.34.39 Operation mode setting property 260
9.34.40 System interconnection status property 261
9.34.41 Minimum/maximum charging electric power (independent) property 261
9.34.42 Minimum/maximum discharging electric power (independent) property 261
9.34.43 Minimum/maximum charging current (independent) property 261
9.34.44 Minimum/maximum discharging current (independent) property 261
9.34.45 Charging/discharging amount setting 1 property 262
9.34.46 Charging/discharging amount setting 2 property 262
9.34.47 Remaining stored electricity 1 property 262
9.34.48 Remaining stored electricity 2 property 262
9.34.49 Remaining stored electricity 3 property 262
9.34.50 Battery state of health property 262
9.34.51 Battery type property 263
9.34.52 Charging amount setting 1 property 263
9.34.53 Discharging amount setting 1 property 263
9.34.54 Charging amount setting 2 property 263
9.34.55 Discharging amount setting 2 property 263
9.34.56 Charging electric power setting property 263
9.34.57 Discharging electric power setting property 263
9.34.58 Charging current setting property 264
9.34.59 Discharging current setting property 264
9.34.60 Rated voltage (independent) property 264
9.35 Electric vehicle charger/discharger class specifications 264
9.35.1 General 264
9.35.2 Operation status property 275
9.35.3 Dischargeable capacity of vehicle mounted battery 1 property 276
9.35.4 Dischargeable capacity of vehicle mounted battery 2 property 276
9.35.5 Remaining dischargeable capacity of vehicle mounted battery 1 property 276
9.35.6 Remaining dischargeable capacity of vehicle mounted battery 2 property 276
9.35.7 Remaining dischargeable capacity of vehicle mounted battery 3 property 276
9.35.8 Rated charge capacity property 276
9.35.9 Rated discharge capacity property 276
9.35.10 Vehicle connection and chargeable/dischargeable status property 277
9.35.11 Minimum/maximum charging electric power property 277
9.35.12 Minimum/maximum discharging electric power property 277
9.35.13 Minimum/maximum charging current property 278
9.35.14 Minimum/maximum discharging current property 278
9.35.15 Charger/discharger type property 278
9.35.16 Vehicle connection confirmation property 279
9.35.17 Used capacity of vehicle mounted battery 1 (total battery capacity) property 279
9.35.18 Used capacity of vehicle mounted battery 2 property 279
9.35.19 Rated voltage property 280
9.35.20 Measured instantaneous charging/discharging electric power 280
9.35.21 Measured instantaneous charging/discharging current property 280

Documents
Document Sharing Hub
Full document details: BS IEC 62394:2024

9.35.22 Measured instantaneous charging/discharging voltage property 280
9.35.23 Measured cumulative amount of discharging electric energy property 280
9.35.24 Cumulative amount of discharging electric energy reset setting 280
9.35.25 Measured cumulative amount of charging electric energy property 280
9.35.26 Cumulative amount of charging electric energy reset setting property 280
9.35.27 Operation mode setting property 281
9.35.28 System interconnection status property 282
9.35.29 Charging method property 282
9.35.30 Discharging method property 283
9.35.31 Purchasing electric power setting property 284
9.35.32 Re-interconnection permission setting property 285
9.35.33 Charging/discharging electric power setting property 285
9.35.34 Working operation status property 286
9.35.35 Remaining stored electricity of vehicle mounted battery 1 property 286
9.35.36 Remaining stored electricity of vehicle mounted battery 2 property 286
9.35.37 Remaining stored electricity of vehicle mounted battery 3 (charging rate) property 286
9.35.38 Charging amount setting 1 property 287
9.35.39 Charging amount setting 2 property 287
9.35.40 Charging electric power setting property 287
9.35.41 Discharging electric power setting property 287
9.35.42 Charging current setting property 287
9.35.43 Discharging current setting property 287
9.35.44 Rated voltage (independent status) property 287
9.35.45 Chargeable capacity of vehicle mounted battery property 288
9.35.46 Remaining chargeable capacity of vehicle mounted battery property 288
9.35.47 Vehicle ID property 288
9.35.48 Discharging amount setting property 288
9.35.49 Maintenance status property 289
9.36 Engine cogeneration class specifications 289
9.36.1 General 289
9.36.2 Operation status property 291
9.36.3 Measured hot water temperature of water heater property 291
9.36.4 Rated power generation output property 291
9.36.5 Heating value of hot water storage tank property 291
9.36.6 Measured instantaneous power generation output property 292
9.36.7 Measured cumulative energy generation output property 292
9.36.8 Cumulative energy generation output reset setting property 292
9.36.9 Measured instantaneous gas consumption property 292
9.36.10 Measured cumulative gas consumption property 292
9.36.11 Cumulative gas consumption reset setting property 292
9.36.12 Power generation setting property 292
9.36.13 Power generation status property 292
9.36.14 Measured in-house instantaneous power consumption property 292
9.36.15 Measured in-house cumulative energy consumption property 293
9.36.16 In-house cumulative energy consumption reset property 293
9.36.17 System interconnection status property 293
9.36.18 Measured remaining hot water amount property 293
9.36.19 Tank capacity property 293

AVA Documents
Document Sharing Hub

9.37 Water flowmeter class specifications 293
9.37.1 General 293
9.37.2 Operation status property 295
9.37.3 Water flowmeter classification property 295
9.37.4 Owner classification property 296
9.37.5 Measured cumulative amount of flowing water property 296
9.37.6 Unit for measured cumulative amounts of flowing water property 296
9.37.7 Historical data of measured cumulative amounts of flowing water property 296
9.37.8 Detection of abnormal value in metering data property 296
9.37.9 Security data information property 297
9.37.10 ID number setting property 297
9.37.11 Verification expiration information property 297
9.37.12 Historical data of measured cumulative amounts of flowing water 2 property 297
9.38 Power distribution board metering class specifications 297
9.38.1 General 297
9.38.2 Operation status property 317
9.38.3 Measured cumulative amount of electric energy (normal and reverse directions) property 317
9.38.4 Unit for cumulative amounts of electric energy property 318
9.38.5 Historical data of measured cumulative amounts of electric energy (normal and reverse directions) property 318
9.38.6 Day for which the historical data of measured cumulative amounts of electric energy shall be retrieved (normal and reverse directions) property 318
9.38.7 Measured instantaneous electric power property 319
9.38.8 Measured instantaneous currents property 319
9.38.9 Measured instantaneous voltages property 319
9.38.10 Measurement channels 1 to 32 property 319
9.38.11 Master rated capacity property 320
9.38.12 Number of measurement channels (simplex) property 320
9.38.13 Channel range specification for cumulative amount of electric energy consumption measurement (simplex) property 320
9.38.14 Measured cumulative amount of electric energy consumption list (simplex) property 320
9.38.15 Channel range specification for instantaneous current measurement (simplex) property 321
9.38.16 Measured instantaneous current list (simplex) property 321
9.38.17 Channel range specification for instantaneous power consumption measurement (simplex) property 322
9.38.18 Measured instantaneous power consumption list (simplex) property 322
9.38.19 Number of measurement channels (duplex) property 322
9.38.20 Channel range specification for cumulative amount of electric energy consumption measurement (duplex) property 323
9.38.21 Measured cumulative amount of electric energy consumption list (duplex) property 323
9.38.22 Channel range specification for instantaneous current measurement (duplex) property 323
9.38.23 Measured instantaneous current list (duplex) property 324
9.38.24 Channel range specification for instantaneous power consumption measurement (duplex) property 324

Documents
Document Sharing Hub
Full document details: BS IEC 62394:2024

9.38.25 Measured instantaneous power consumption list (duplex) property 325
9.39 Low-voltage smart electric meter class specifications 325
9.39.1 General 325
9.39.2 Operation status property 332
9.39.3 Coefficient property 332
9.39.4 Number of effective digits for cumulative amounts of electric energy property 332
9.39.5 Measured cumulative amount of electric energy (normal direction) property 333
9.39.6 Unit for measured cumulative amounts of electric energy (normal and reverse directions) property 333
9.39.7 Historical data of measured cumulative amounts of electric energy 1 (normal direction) property 333
9.39.8 Measured cumulative amounts of electric energy (reverse direction) property 334
9.39.9 Historical data of measured cumulative amounts of electric energy 1 (reverse direction) property 334
9.39.10 Day for which the historical data of measured cumulative amounts of electric energy shall be retrieved 1 property 335
9.39.11 Measured instantaneous electric power property 335
9.39.12 Measured instantaneous currents property 335
9.39.13 Cumulative amounts of electric energy measured at fixed time (normal direction) property 335
9.39.14 Cumulative amounts of electric energy measured at fixed time (reverse direction) property 336
9.39.15 Historical data of measured cumulative amounts of electric energy 2 (normal and reverse directions) property 337
9.39.16 Day for which the historical data of measured cumulative amounts of electric energy shall be retrieved 2 property 337
9.40 Smart gas meter class specifications 338
9.40.1 General 338
9.40.2 Operation status property 342
9.40.3 Gas meter classification setting property 342
9.40.4 Owner classification setting property 342
9.40.5 Measured cumulative gas consumption property 343
9.40.6 Unit for measured cumulative gas consumption property 343
9.40.7 Historical data of measured cumulative gas consumption property 344
9.40.8 Day setting for which the historical data of measured cumulative gas consumption shall be retrieved property 344
9.40.9 Detection of abnormal value in metering data property 344
9.40.10 Security data information property 344
9.40.11 Valve closure by the Centre property 345
9.40.12 Permission from the Centre to reopen the valve closed by the Centre property 345
9.40.13 Emergency closure of shutoff valve property 345
9.40.14 Shutoff valve status property 345
9.40.15 Historical data of shutoff reasons property 345
9.40.16 ID number setting property 345
9.40.17 Verification expiration setting property 345
9.40.18 Measured cumulative gas consumption information with date and time property 345
9.40.19 Historical information of cumulative gas consumption property 346

Documents
Document Sharing Hub
Full document details: BS IEC 62394:2024

9.41 High-voltage smart electric energy meter class specifications 347
9.41.1 General 347
9.41.2 Operation status property 357
9.41.3 Coefficient property 357
9.41.4 Multiplying factor for coefficient property 357
9.41.5 Fixed date property 357
9.41.6 Day for which the historical data of measured cumulative amounts of electric energy shall be retrieved property 357
9.41.7 Measured cumulative amount of active electric energy property 358
9.41.8 Cumulative amounts of active electric energy at fixed time property 358
9.41.9 Measurement data of cumulative amount of active electric energy for power factor measurement 359
9.41.10 Number of effective digits for cumulative amount of active electric energy property 359
9.41.11 Unit for cumulative amounts of active electric energy property 360
9.41.12 Historical data of measured cumulative amount of active electric energy property 360
9.41.13 Monthly maximum electric power demand property 360
9.41.14 Cumulative maximum electric power demand property 361
9.41.15 Electric power demand at fixed time (30-min average electric power) property 362
9.41.16 Number of effective digits of electric power demand property 362
9.41.17 Unit of electric power demand property 362
9.41.18 Historical data of measured electric power demand property 363
9.41.19 Unit of cumulative maximum electric power demand property 363
9.41.20 Measurement data of reactive electric energy consumption (lag) for power factor measurement property 364
9.41.21 Measurement data of cumulative amount of reactive electric energy consumption (lag) at fixed time for power factor measurement property 364
9.41.22 Number of effective digits for measurement data of cumulative amount of reactive electric energy consumption (lag) for power factor measurement property 365
9.41.23 Unit of measurement data of cumulative amount of reactive electric energy consumption (lag) property 365
9.41.24 Historical data of measurement data of cumulative amount of reactive electric energy consumption (lag) for power factor measurement property 366
9.42 Kerosene meter class specifications 366
9.42.1 General 366
9.42.2 Operation status property 367
9.42.3 Measured cumulative amount of kerosene consumption property 367
9.42.4 History of measured cumulative amounts of kerosene consumption property 367
9.43 Smart kerosene meter class specifications 367
9.43.1 General 367
9.43.2 Operation status property 371
9.43.3 Owner category setting property 371
9.43.4 Measured cumulative kerosene consumption property 371
9.43.5 Units for measured cumulative kerosene consumption property 372
9.43.6 Historical information of cumulative kerosene consumption property 372
9.43.7 Collection date setting for history of cumulative kerosene consumption property 372

AVA Documents
Document Sharing Hub

9.43.8 Meter reading data abnormality detection status property 373
9.43.9 Security data information property 373
9.43.10 Residual volume control warning level property 373
9.43.11 Residual volume control warning level 1 property 373
9.43.12 Residual volume control warning level 2 property 373
9.43.13 Residual volume control warning level 3 property 373
9.43.14 Slight leak timer value (kerosene flow rate continuation) property 374
9.43.15 ID number setting property 374
9.43.16 Verification expiration setting property 374
9.43.17 Measured cumulative kerosene consumption information with date and time property 374
9.43.18 Historical information of cumulative kerosene consumption property 374
9.44 Smart electric energy meter for sub-metering class specifications 375
9.44.1 General 375
9.44.2 Operation status property 383
9.44.3 Current time setting property 383
9.44.4 Current date setting property 383
9.44.5 Electric power coefficient property 383
9.44.6 Unit for measured cumulative amount of electric energy (normal and reverse directions) property 383
9.44.7 Number of effective digits for cumulative amount of electric energy property 383
9.44.8 Electric current coefficient property 383
9.44.9 Voltage coefficient property 384
9.44.10 Day on which the historical data of measured cumulative amount of electric energy is to be retrieved property 384
9.44.11 Measured cumulative amount of electric energy (normal direction) property 384
9.44.12 Historical data of measured cumulative amount of electric energy (normal direction) property 384
9.44.13 Measured cumulative amount of electric energy (reverse direction) property 385
9.44.14 Historical data of measured cumulative amount of electric energy (reverse direction) property 385
9.44.15 Measured instantaneous electric power property 386
9.44.16 Measured instantaneous currents property 386
9.44.17 Measured instantaneous voltages property 386
9.44.18 Cumulative amount of electric energy measured at a fixed time (normal direction) property 387
9.44.19 Cumulative amount of electric energy measured at a fixed time (reverse direction) property 387
9.45 Distributed generator's electric energy meter class specifications 388
9.45.1 General 388
9.45.2 Operation status property 399
9.45.3 Current date setting property 400
9.45.4 Device type property 400
9.45.5 Device ID property 400
9.45.6 Tolerance property 400
9.45.7 Number of days to retain historical data of measured cumulative amount of electric energy property 400
9.45.8 Unit for cumulative amount of electric energy property 400

AVA Documents
Document Sharing Hub
Full document details: BS IEC 62394:2024

9.45.9 Day on which the historical data of measured cumulative amount of electric energy is to be retrieved property ... 400
9.45.10 Identification number of device to be metered property ... 401
9.45.11 Current hour, minute, and second setting property ... 401
9.45.12 Time synchronization status property ... 401
9.45.13 Measured cumulative amount of electric energy (AC input) property ... 401
9.45.14 Historical data of measured cumulative amount of electric energy (AC input) property ... 402
9.45.15 Measured cumulative amount of electric energy (AC output) property ... 402
9.45.16 Historical data of measured cumulative amount of electric energy (AC output) property ... 402
9.45.17 Measured cumulative amount of electric energy (independent output) property ... 402
9.45.18 Historical data of measured cumulative amount of electric energy (independent output) property ... 403
9.45.19 Cumulative amount of electric energy measured at fixed time (AC input) property ... 403
9.45.20 Cumulative amount of electric energy measured at fixed time (AC output) property ... 404
9.45.21 Cumulative amount of electric energy measured at fixed time (independent output) property ... 404
9.45.22 Measured instantaneous electric power (AC input/output) property ... 404
9.45.23 Measured instantaneous electric power (independent output) property ... 404
9.46 General light class specifications ... 405
9.46.1 General ... 405
9.46.2 Operation status property ... 408
9.46.3 Illuminance level property ... 408
9.46.4 Light colour setting property ... 408
9.46.5 Illuminance level step setting property ... 409
9.46.6 Light colour step setting property ... 409
9.46.7 Maximum specifiable values property ... 410
9.46.8 Maximum value of settable level for night lighting property ... 410
9.46.9 Lighting mode setting property ... 410
9.46.10 Illuminance level setting for main lighting property ... 410
9.46.11 Illuminance level step setting for main lighting property ... 411
9.46.12 Illuminance level setting for night lighting property ... 411
9.46.13 Illuminance level step setting for night lighting property ... 411
9.46.14 Light colour setting for main lighting property ... 412
9.46.15 Light colour level step setting for main lighting property ... 412
9.46.16 Light colour setting for night lighting property ... 412
9.46.17 Light colour level step setting for night lighting property ... 413
9.46.18 Lighting mode status in automatic mode property ... 413
9.46.19 RGB setting for colour lighting property ... 413
9.46.20 ON timer reservation setting property ... 413
9.46.21 ON timer setting property ... 413
9.46.22 OFF timer reservation setting property ... 414
9.46.23 OFF timer setting property ... 414
9.47 Mono functional lighting class specifications ... 414
9.47.1 General ... 414
9.47.2 Operation status property ... 414
9.47.3 Illuminance level setting property ... 414

AVA Documents
Document Sharing Hub
Full document details: BS IEC 62394:2024

9.48 Lighting for solid light-emitting source class specifications ... 415
9.48.1 General ... 415
9.48.2 Operation status property ... 416
9.48.3 Number of light sources property ... 416
9.48.4 List of the light source operation status property ... 416
9.48.5 List of the light source optical output setting values property ... 417
9.48.6 List of light source colour temperature setting values property ... 418
9.48.7 ON timer reservation setting property ... 418
9.48.8 ON timer setting property ... 419
9.48.9 OFF timer reservation setting property ... 419
9.48.10 OFF timer setting property ... 419
9.49 Electric vehicle charger class specifications ... 419
9.49.1 General ... 419
9.49.2 Operation status property ... 424
9.49.3 Rated charge capacity property ... 424
9.49.4 Vehicle connection and chargeable status property ... 424
9.49.5 Minimum/maximum charging electric power property ... 424
9.49.6 Minimum/maximum charging current property ... 424
9.49.7 Charger type property ... 425
9.49.8 Vehicle connection confirmation property ... 425
9.49.9 Used capacity of vehicle-mounted battery 1 property ... 426
9.49.10 Rated voltage property ... 426
9.49.11 Measured instantaneous charging electric power property ... 426
9.49.12 Measured cumulative amount of charging electric energy property ... 426
9.49.13 Cumulative amount of charging electric energy reset setting property ... 426
9.49.14 Operating mode setting property ... 426
9.49.15 Remaining stored electricity of vehicle-mounted battery 1 property ... 426
9.49.16 Remaining stored electricity of vehicle-mounted battery 3 property ... 426
9.49.17 Charging electric power setting property ... 427
9.49.18 Charging current setting property ... 427
9.49.19 Chargeable capacity of vehicle mounted battery property ... 427
9.49.20 Remaining chargeable capacity of vehicle mounted battery property ... 427
9.49.21 Vehicle ID property ... 427
9.49.22 Charging amount setting property ... 428
9.50 Household small wind turbine power generation class specifications ... 428
9.50.1 General ... 428
9.50.2 Operation status property ... 430
9.50.3 System interconnection status property ... 430
9.50.4 Measured instantaneous amount of electricity generated property ... 430
9.50.5 Measured cumulative amount of electricity generated property ... 430
9.50.6 Resetting cumulative amount of electricity generated property ... 430
9.50.7 Measured cumulative amount of electricity sold property ... 430
9.50.8 Resetting cumulative amount of electricity sold property ... 430
9.50.9 Power generation output limit setting 1 property ... 431
9.50.10 Power generation output limit setting 2 property ... 431
9.50.11 Limit setting for the amount of electricity sold property ... 431
9.50.12 Rated power property ... 431
9.50.13 Measured wind speed property ... 431
9.50.14 Rated wind speed property ... 431

AVA Documents
Document Sharing Hub
Full document details: BS IEC 62394:2024

9.50.15 Cut-in wind speed property 431
9.50.16 Cut-out wind speed property 431
9.50.17 Extreme wind speed property 432
9.50.18 Braking status property 432
9.51 Lighting system class specifications 432
9.51.1 General 432
9.51.2 Operation status property 433
9.51.3 Illuminance level setting property 434
9.51.4 Scene control setting property 434
9.51.5 Number that can assign scene control setting property 434
9.52 Extended lighting system class specifications 434
9.52.1 General 434
9.52.2 Operation status property 436
9.52.3 Illuminance level setting property 436
9.52.4 Scene control setting property 436
9.52.5 Number that can assign scene control setting property 437
9.52.6 Power consumption rate list property 437
9.52.7 Power consumption when fully lit property 437
9.52.8 Possible power savings property 437
9.52.9 Power consumption limit setting property 437
9.52.10 Automatic operation controlling setting property 438
9.52.11 Fading control change time setting property 439
9.53 Multiple input PCS class specifications 439
9.53.1 General 439
9.53.2 Operation status property 441
9.53.3 Identification number property 441
9.53.4 Current time setting property 442
9.53.5 Current date setting property 442
9.53.6 System interconnection status property 442
9.53.7 Measured cumulative amount of electric energy (normal direction) property 442
9.53.8 Measured cumulative amount of electric energy (reverse direction) property 442
9.53.9 Measured instantaneous electric power property 442
9.53.10 List of connected devices property 442
9.54 Hybrid water heater class specifications 443
9.54.1 General 443
9.54.2 Operation status property 445
9.54.3 Automatic water heating setting property 446
9.54.4 Water heating status property 446
9.54.5 Heater status property 446
9.54.6 Hot water supply mode setting for auxiliary heat source machine property 446
9.54.7 Heater mode setting for auxiliary heat source machine property 446
9.54.8 Linkage mode setting for solar power generation property 446
9.54.9 Solar power generations utilization time property 446
9.54.10 Hot water supply status property 447
9.54.11 Measured amount of hot water remaining in tank property 447
9.54.12 Tank capacity property 447
9.55 Refrigerator class specifications 448

AVA Documents
Document Sharing Hub
Full document details: BS IEC 62394:2024

9.55.1 General ... 448
9.55.2 Operation status property ... 453
9.55.3 Door open/close status property ... 453
9.55.4 Door open warning property ... 454
9.55.5 Refrigerator compartment door status ... 454
9.55.6 Freezer compartment door status property ... 454
9.55.7 Ice compartment door status property ... 454
9.55.8 Vegetable compartment door status property ... 454
9.55.9 Multi-refrigerating mode compartment door status property ... 454
9.55.10 Maximum allowable temperature setting level property ... 454
9.55.11 Refrigerator compartment temperature setting property ... 455
9.55.12 Freezer compartment temperature setting property ... 455
9.55.13 Ice compartment temperature setting property ... 455
9.55.14 Vegetable compartment temperature setting property ... 455
9.55.15 Multi-refrigerating mode compartment temperature setting property ... 455
9.55.16 Refrigerator compartment temperature level setting property ... 456
9.55.17 Freezer compartment temperature level setting property ... 456
9.55.18 Ice compartment temperature level setting property ... 456
9.55.19 Vegetable compartment temperature level setting property ... 456
9.55.20 Multi-refrigerating mode compartment temperature level setting property ... 457
9.55.21 Measured refrigerator compartment temperature property ... 457
9.55.22 Measured freezer compartment temperature property ... 457
9.55.23 Measured ice compartment temperature property ... 457
9.55.24 Measured vegetable compartment temperature property ... 457
9.55.25 Measured multi-refrigerating mode compartment temperature property ... 457
9.55.26 Compressor rotation speed property ... 458
9.55.27 Measured electric current consumption property ... 458
9.55.28 Rated power consumption property ... 458
9.55.29 Quick freeze function setting property ... 458
9.55.30 Quick refrigeration function setting property ... 458
9.55.31 Icemaker setting property ... 459
9.55.32 Icemaker operation status property ... 459
9.55.33 Icemaker tank status property ... 459
9.55.34 Refrigerator compartment humidification function setting property ... 459
9.55.35 Vegetable compartment humidification function setting property ... 459
9.55.36 Deodorization function setting property ... 459
9.56 Microwave oven class specifications ... 459
9.56.1 General ... 459
9.56.2 Operation status property ... 466
9.56.3 Door open/close status property ... 466
9.56.4 Heating status property ... 466
9.56.5 Heating setting property ... 467
9.56.6 Heating mode setting property ... 467
9.56.7 Automatic heating setting property ... 468
9.56.8 Automatic heating level setting property ... 468
9.56.9 Automatic heating menu setting property ... 469
9.56.10 Oven mode setting property ... 470
9.56.11 Oven preheating setting property ... 470
9.56.12 Fermenting mode setting property ... 471

AVA Documents
Document Sharing Hub
Full document details: BS IEC 62394:2024

9.56.13 Chamber temperature setting property ... 471
9.56.14 Food temperature setting property ... 471
9.56.15 Heating time setting property ... 471
9.56.16 Remaining heating time setting property ... 472
9.56.17 Microwave heating power setting property ... 472
9.56.18 Prompt message setting property ... 472
9.56.19 Accessories to combination microwave oven setting property ... 473
9.56.20 Display character string setting property ... 475
9.56.21 Two-stage microwave heating setting (duration) property ... 475
9.56.22 Two-stage microwave heating setting (heating power) property ... 475
9.57 Washer and dryer class specifications ... 476
9.57.1 General ... 476
9.57.2 Operation status property ... 489
9.57.3 Door/cover open/close status property ... 489
9.57.4 Washer and dryer setting property ... 489
9.57.5 Washer and dryer cycle setting 1 property ... 489
9.57.6 Washer and dryer cycle setting 2 property ... 492
9.57.7 Drying cycle setting property ... 494
9.57.8 Washer and dryer cycle option list 1 property ... 495
9.57.9 Washer and dryer cycle option list 2 property ... 495
9.57.10 Washer and dryer cycle option list 3 property ... 495
9.57.11 Water flow rate setting property ... 496
9.57.12 Rotation speed for spin drying setting property ... 496
9.57.13 Degree of drying setting property ... 497
9.57.14 Remaining washing time property ... 497
9.57.15 Remaining drying time ... 497
9.57.16 Elapsed time on the ON timer property ... 497
9.57.17 Pre-soaking time setting property ... 497
9.57.18 Current stage of washer and dryer cycle property ... 498
9.57.19 Water volume setting 1 property ... 499
9.57.20 Water volume setting 2 property ... 500
9.57.21 Washing time setting property ... 500
9.57.22 Number of times of rinsing property ... 501
9.57.23 Rinsing process setting property ... 501
9.57.24 Spin drying time setting property ... 501
9.57.25 Drying time setting property ... 502
9.57.26 Warm water setting property ... 502
9.57.27 Bathtub water recycle setting property ... 502
9.57.28 Wrinkling minimization setting property ... 503
9.57.29 Time remaining to complete washer and dryer cycle property ... 503
9.57.30 Door/cover lock setting property ... 503
9.57.31 Washer and dryer cycle property ... 503
9.57.32 ON timer reservation setting property ... 505
9.57.33 ON timer setting property ... 505
9.57.34 Relative time-based ON timer setting ... 505
9.58 Clothes dryer class specifications ... 505
9.58.1 General ... 505
9.58.2 Operation status property ... 506
9.58.3 Door/cover open/close status property ... 506

AVA Documents
Document Sharing Hub
Full document details: BS IEC 62394:2024

9.58.4 Drying setting property ... 507
9.58.5 Drying status property ... 507
9.58.6 Remaining drying time property ... 507
9.58.7 ON timer reservation setting property ... 507
9.58.8 ON timer setting property ... 507
9.58.9 Relative time-based ON timer setting property ... 507
9.59 Cooking heater class specifications ... 507
9.59.1 General ... 507
9.59.2 Operation status property ... 510
9.59.3 Heating status property ... 510
9.59.4 Heating setting property ... 511
9.59.5 All stop setting property ... 511
9.59.6 Heating power setting property ... 512
9.59.7 Heating temperature setting property ... 512
9.59.8 Heating modes of stoves setting property ... 512
9.59.9 Relative time settings of OFF timers property ... 513
9.59.10 Child lock setting property ... 513
9.59.11 Radiant heater lock setting property ... 513
9.60 Commercial showcase class specifications ... 514
9.60.1 General ... 514
9.60.2 Operation status property ... 516
9.60.3 Operation mode setting property ... 516
9.60.4 Measured value of discharge temperature property ... 516
9.60.5 Internal lighting operation status property ... 517
9.60.6 External lighting operation status property ... 517
9.60.7 Compressor operation status property ... 517
9.60.8 Measured value of internal temperature property ... 517
9.60.9 Freezing capability value property ... 517
9.60.10 Defrosting heater power consumption property ... 517
9.60.11 Fan motor power consumption property ... 517
9.60.12 Heater mode property ... 517
9.60.13 Group information property ... 517
9.60.14 Showcase type information property ... 518
9.60.15 Door type information property ... 518
9.60.16 Showcase configuration information property ... 518
9.60.17 Type of lighting inside the showcase property ... 518
9.60.18 Type of lighting outside the case property ... 518
9.60.19 Illuminance level setting of lighting inside the showcase property ... 518
9.60.20 Illuminance level setting of lighting outside the case property ... 518
9.60.21 Temperature setting of inside the case property ... 518
9.60.22 Showcase shape information property ... 518
9.60.23 Temperature range information for inside the case property ... 518
9.61 Commercial showcase outdoor unit class specifications ... 519
9.61.1 General ... 519
9.61.2 Operation status property ... 519
9.61.3 Exceptional status property ... 519
9.61.4 Operation mode setting property ... 520
9.61.5 Measured value of outdoor air temperature property ... 520
9.61.6 Compressor operation status property ... 521

AVA Documents
Document Sharing Hub
Full document details: BS IEC 62394:2024

9.61.7 Group information property ... 520
9.62 Dishwasher and dryer class specifications ... 520
9.62.1 General ... 520
9.62.2 Operation status property ... 532
9.62.3 ON timer reservation setting property ... 532
9.62.4 ON timer setting property ... 532
9.62.5 Relative time-based ON timer setting property ... 532
9.62.6 Door/cover open/close setting property ... 532
9.62.7 Door/cover lock setting property ... 532
9.62.8 Operation status setting property ... 532
9.62.9 Dish-washing method setting property ... 533
9.62.10 Drying method setting property ... 533
9.62.11 Storing method setting property ... 534
9.62.12 Dish-washing method setting acceptable information property ... 534
9.62.13 Drying method setting acceptable information property ... 535
9.62.14 Storing method setting acceptable information property ... 535
9.62.15 Prewashing time setting property ... 535
9.62.16 Highest water temperature setting for prewashing property ... 536
9.62.17 Washing time setting property ... 536
9.62.18 Highest water temperature setting for washing property ... 536
9.62.19 Number of times of rinsing setting property ... 537
9.62.20 Rinsing mode setting property ... 537
9.62.21 Highest water temperature setting for hot water rinsing property ... 537
9.62.22 Dish-washing water volume setting property ... 538
9.62.23 Dish-washing water pressure setting property ... 538
9.62.24 Dish-washing level setting property ... 538
9.62.25 Drying time setting property ... 539
9.62.26 Highest air temperature setting for hot air drying property ... 539
9.62.27 Drying air flow rate setting property ... 539
9.62.28 Drying level setting property ... 540
9.62.29 Storing time setting property ... 540
9.62.30 Operation setting information property ... 541
9.62.31 Operation transition status property ... 542
9.62.32 Remaining time on the ON timer property ... 544
9.62.33 Remaining time of prewashing property ... 544
9.62.34 Remaining time of washing property ... 544
9.62.35 Remaining time of rinsing property ... 545
9.62.36 Remaining time of dish-washing property ... 545
9.62.37 Remaining drying time property ... 545
9.62.38 Remaining time of dish-washing and drying property ... 545
9.62.39 Storing elapsed time property ... 545
9.62.40 Used water volume property ... 545
9.63 Switch class specifications ... 545
9.63.1 General ... 545
9.63.2 Operation status property ... 546
9.63.3 Connected device property ... 546
9.64 Controller class specifications ... 546
9.64.1 General ... 546
9.64.2 Operation status property ... 546

AVA Documents
Document Sharing Hub
Full document details: BS IEC 62394:2024

9.64.3 Controller ID property ... 548
9.64.4 Number of devices controlled property ... 549
9.64.5 Index property ... 549
9.64.6 Device ID property ... 549
9.64.7 Device type property ... 549
9.64.8 Name property ... 549
9.64.9 Connection status property ... 550
9.64.10 Business code of the device to be controlled property ... 550
9.64.11 Product code of the device to be controlled property ... 550
9.64.12 Manufacture date of the device to be controlled property ... 550
9.64.13 Registered information renewal date of the device to be controlled property ... 551
9.64.14 Registered information renewal version information of the device to be controlled property ... 551
9.64.15 Place to install device to be controlled property ... 551
9.64.16 Fault status of device to be controlled property ... 551
9.64.17 Address of installation location property ... 551
9.64.18 Set property map for device to be controlled property ... 551
9.64.19 Get property map for device to be controlled property ... 551
10 Property map description format ... 552
Bibliography ... 553

Figure 1 – ECHONET frame for plain data format ... 41
Figure 2 – EHD detailed specifications ... 42
Figure 3 – Configuration of SEA and DEA when an individual address is specified ... 43
Figure 4 – Broadcast target stipulation code ... 43
Figure 5 – Node group stipulation bit specifications ... 44
Figure 6 – OHD detailed specifications ... 45
Figure 7 – EOJ detailed specifications ... 45
Figure 8 – EPC detailed specifications ... 47
Figure 9 – ESV detailed specifications ... 47
Figure 10 – EDATA configuration in property value write service ... 52
Figure 11 – EDATA configuration in property value read service ... 52
Figure 12 – EDATA configuration in property value notification service ... 53
Figure 13 – EDATA configuration in property value element-stipulated write service ... 54
Figure 14 – EDATA configuration in property value element-stipulated read service ... 55
Figure 15 – EDATA configuration in property value element-stipulated notification service ... 56
Figure 16 – EDATA configuration in property value element-stipulated addition ... 57
Figure 17 – EDATA configuration in property value element-stipulated deletion ... 58
Figure 18 – EDATA configuration in property value element-stipulated existence confirmation ... 59
Figure 19 – EDATA configuration in property value element addition ... 60
Figure 20 – EDATA configuration in property value notification (response required) ... 60
Figure 21 – EDATA configuration in property value element-stipulated notification (response required) ... 61
Figure 22 – CpESV configuration ... 62

AVA Documents
Document Sharing Hub
Full document details: BS IEC 62394:2024

Figure 23 – Relationship between write request (requiring no response) and write "process-not-possible" response 65
Figure 24 – Relationship between write request (requiring a response), write "accepted" response, and write "process-not-possible" response 66
Figure 25 – Relationship between read request (requiring a response), read "accepted" response, and read "process-not-possible" response 67
Figure 26 – Notification message format 68
Figure 27 – Relationship between property value notification (requiring a response) and property value notification response 68
Figure 28 – Processing target property counter for three requests 69
Figure 29 – Property data counter 69
Figure 30 – ECHONET Lite frame format 70
Figure 31 – Detailed specifications of ELHD1 70
Figure 32 – Detailed specifications of ELHD2 71
Figure 33 – Detailed specifications of EOJ code 71
Figure 34 – ELSV code detailed specifications 72
Figure 35 – ELDATA configuration for property value write service (no response required) 75
Figure 36 – ELDATA configuration for property value write service (response required) 76
Figure 37 – ELDATA configuration for property value read service 77
Figure 38 – ELDATA configuration for property value write and read service 78
Figure 39 – ELDATA configuration for property value notification service 79
Figure 40 – ELDATA configuration for property value notification (response required) service 80
Figure 41 – EPC detailed specifications 81
Figure 42 – ECHONET Lite Property data counter 82
Figure 43 – Example of array elements 84
Figure 44 – Example of property value element deletion 85
Figure 45 – Example of property value element addition 85
Figure 46 – Data structure of "identification number" property 92
Figure 47 – Data structure of "manufacturer's fault code" property 92
Figure 48 – Configuration without "control server" 97
Figure 49 – Configuration with "control server" 97
Figure 50 – Air flow direction (vertical) setting 124
Figure 51 – Air flow direction (horizontal) setting 125
Figure 52 – Mounted air cleaning method 127
Figure 53 – Air purifier function setting 128
Figure 54 – Air refresh method 128
Figure 55 – Air refresher function setting 129
Figure 56 – Self-cleaning method 130
Figure 57 – Self-cleaning function setting 130
Figure 58 – Implemented ion emission method 139
Figure 59 – Implemented special operation modes 139
Figure 60 – Power restriction control of commercial-use package air conditioner (example) 146

AVA Documents
Document Sharing Hub
Full document details: BS IEC 62394:2024

Figure 61 – Value of alarm status 183
Figure 62 – Period that writing request is unacceptable 188
Figure 63 – Time to start accumulating hot water shift (daytime single shift) 192
Figure 64 – Time to start accumulating hot water shift (daytime double shift) 193
Figure 65 – An example of household solar power generation configuration 223
Figure 66 – Function to control purchase of excess electricity 224
Figure 67 – An example of capacity approved by equipment 227
Figure 68 – Daily timer setting 234
Figure 69 – Example of the battery configuration 242
Figure 70 – Image of various properties related to electric energy handled in this class 242
Figure 71 – Overview of charging methods 256
Figure 72 – Overview of discharging methods for storage battery if reverse power flow is not allowed 257
Figure 73 – Overview of discharging methods for storage battery if reverse power flow is allowed 257
Figure 74 – Relationship between the properties related to electric energy handled in this class 265
Figure 75 – Operation concept of Charging/Discharging (0x46). 281
Figure 76 – Relationship between properties (transition). 283
Figure 77 – Relationship between properties (no transition) 283
Figure 78 – Operation overview of discharging on designated purchasing electric power 285
Figure 79 – Operation overview of charging on designated purchasing electric power 285
Figure 80 – Data structure of Vehicle ID in electric vehicle charger/discharger class 288
Figure 81 – Current direction in power distribution board 317
Figure 82 – A concept of the distributed generator's electric energy meter class 397
Figure 83 – Measuring points in the distributed generator's electric energy meter class 398
Figure 84 – Node configuration examples 399
Figure 85 – Actual implementation cases from the solid light-emitting source class 416
Figure 86 – Relationship between the properties related to electric energy handled in this class 423
Figure 87 – Data structure of vehicle ID in electric vehicle charger class 427
Figure 88 – Relationship between the properties related to household small wind turbine power generation class 432
Figure 89 – A configuration of lighting system 433
Figure 90 – A configuration of extended lighting system 436
Figure 91 – Explanation for power consumptions 438
Figure 92 – An example of multiple input PCS configuration 441
Figure 93 – Example of a device that operates a heat pump only when supplying hot water 445
Figure 94 – Example of a device that operates a heat pump when supplying hot water and heating 445
Figure 95 – Stove 511

Table 1 – Bit pattern for hop count 42
Table 2 – DEA (broadcast-stipulated) address configuration 43

AVA Documents
Document Sharing Hub
Full document details: BS IEC 62394:2024

Table 3 – List of class group codes 46
Table 4 – List of ESV codes for requests 49
Table 5 – List of ESV codes for response/notification 50
Table 6 – List of ESV codes for "response-not-possible" responses 51
Table 7 – List of CpESV codes for request/notification 64
Table 8 – List of CpESV codes for "accepted" response 64
Table 9 – List of CpESV codes for "process-not-possible" response 64
Table 10 – List of class group codes 72
Table 11 – List of service codes for request 74
Table 12 – List of ELSV codes for response/notification 74
Table 13 – List of ELSV codes for "response not possible" 75
Table 14 – EPC code allocation table 81
Table 15 – Data types, data sizes, and overflow/underflow codes 84
Table 16 – List of device object super class configuration properties 86
Table 17 – Installation location (space) types and the bit values assigned to them 91
Table 18 – Fault-content property value assignments 95
Table 19 – List of temperature sensor properties 100
Table 20 – List of humidity sensor properties 100
Table 21 – List of illuminance sensor properties 101
Table 22 – List of human detection sensor properties 102
Table 23 – List of electric energy sensor properties 103
Table 24 – List of open/close sensor properties 105
Table 25 – List of current sensor properties 106
Table 26 – List of air speed sensor properties 107
Table 27 – List of water flow rate sensor properties 108
Table 28 – List of rain sensor properties 109
Table 29 – List of home air conditioner properties 110
Table 30 – Air flow direction (horizontal) setting 125
Table 31 – List of ventilation fan properties 134
Table 32 – List of air purifier properties 135
Table 33 – List of humidifier properties 137
Table 34 – List of package-type commercial air conditioner (indoor unit) properties 140
Table 35 – List of package-type commercial air conditioner (outdoor unit) properties 143
Table 36 – List of electric storage heater properties 147
Table 37 – List of gas heat pump-type commercial air conditioner (indoor unit) properties 153
Table 38 – List of gas heat pump-type commercial air conditioner (outdoor unit) properties 155
Table 39 – List of range hood properties 158
Table 40 – Range hood-specific errors of EPC = 0x88 "fault status" 164
Table 41 – List of electrically operated shade properties 165
Table 42 – List of electrically operated rain sliding door/shutter properties 170
Table 43 – List of electric water heater properties 174

AVA Documents
Document Sharing Hub

Full document details: BS IEC 62394:2024

Table 44 – Property change according to both heating automatic setting property and energy shift participation status property 188
Table 45 – List of electric toilet seat (warm-water washing toilet seat, heating toilet seat, etc.) properties 194
Table 46 – List of electric lock properties 197
Table 47 – List of household instantaneous water heater properties 199
Table 48 – List of bathroom heater and dryer properties 207
Table 49 – List of household solar power generation properties 218
Table 50 – List of floor heater properties 229
Table 51 – List of fuel cell properties 236
Table 52 – List of storage battery properties 243
Table 53 – List of electric vehicle charger/discharger properties 266
Table 54 – List of engine cogeneration properties 289
Table 55 – List of water flowmeter properties 294
Table 56 – List of power distribution board metering properties 297
Table 57 – List of low-voltage smart electric meter properties 326
Table 58 – List of smart gas meter properties 338
Table 59 – Security data information property 344
Table 60 – Historical data of measured cumulative gas consumption (example) corresponding to the transition of cumulative gas consumption 346
Table 61 – List of high-voltage smart electric energy meter properties 347
Table 62 – List of kerosene meter properties 367
Table 63 – List of smart kerosene meter properties 368
Table 64 – bit assignment for security data 373
Table 65 – Historical data example of measured cumulative kerosene consumption corresponding to the transition of cumulative kerosene consumption 375
Table 66 – List of smart electric energy meter for sub-metering properties 376
Table 67 – List of distributed generator's electric energy meter properties 388
Table 68 – List of general light properties 405
Table 69 – List of mono functional lighting properties 414
Table 70 – List of lighting for solid light-emitting source properties 415
Table 71 – Examples of the list of the light source operation status when operating Get 417
Table 72 – Examples of the list of the light source operation status when operating Set 417
Table 73 – Examples of the list of the light source optical output setting values when operating Get 417
Table 74 – Examples of the list of the light source optical output setting values when operating Set 418
Table 75 – Examples of the list of light source colour temperature setting values when operating Get 418
Table 76 – Examples of the list of light source colour temperature setting values when operating Set 418
Table 77 – List of electric vehicle charger properties 419
Table 78 – List of household small wind turbine power generation properties 428
Table 79 – List of lighting system properties 433
Table 80 – List of extended lighting system properties 434
Table 81 – An example of scene number set 437

AVA Documents
Document Sharing Hub
Full document details: BS IEC 62394:2024

Table 82 – List of multiple input PCS properties 439
Table 83 – List of hybrid water heater properties 443
Table 84 – List of operations for linkage modes and utilization time 447
Table 85 – List of refrigerator properties 448
Table 86 – List of microwave oven properties 460
Table 87 – Heating status property 467
Table 88 – Automatic heating setting property 468
Table 89 – Automatic heating cycle codes 469
Table 90 – Prompt message codes 473
Table 91 – 2 bytes bitmap definition for each accessory 474
Table 92 – List of washer and dryer properties 476
Table 93 – washer and dryer setting property 489
Table 94 – Washer and dryer cycle option list 1 property 495
Table 95 – Washer and dryer cycle option list 2 property 495
Table 96 – Washer and dryer cycle option list 3 property 496
Table 97 – Current stage of washer and dryer cycle property 499
Table 98 – List of clothes dryer properties 506
Table 99 – List of cooking heater properties 508
Table 100 – List of commercial showcase properties 514
Table 101 – List of commercial showcase outdoor unit properties 519
Table 102 – List of dishwasher and dryer properties 520
Table 103 – Bitmap definition for dish-washing method setting acceptable information 535
Table 104 – Bitmap definition for drying method setting acceptable information 535
Table 105 – Bitmap definition for storing method setting acceptable information 535
Table 106 – Bitmap definition for each rinsing mode 537
Table 107 – Operation setting information arrangement 542
Table 108 – Pattern of property values 543
Table 109 – Relationship with operation status setting (EPC = 0xB2) 544
Table 110 – List of switch properties 546
Table 111 – List of controller properties 546
Table 112 – Property map description format 552

Documents
Document Sharing Hub
Full document details: BS IEC 62394:2024

INTERNATIONAL ELECTROTECHNICAL COMMISSION

SERVICE DIAGNOSTIC INTERFACE FOR CONSUMER ELECTRONICS PRODUCTS AND NETWORKS – IMPLEMENTATION FOR ECHONET

FOREWORD

1) The International Electrotechnical Commission (IEC) is a worldwide organization for standardization comprising all national electrotechnical committees (IEC National Committees). The object of IEC is to promote international co-operation on all questions concerning standardization in the electrical and electronic fields. To this end and in addition to other activities, IEC publishes International Standards, Technical Specifications, Technical Reports, Publicly Available Specifications (PAS) and Guides (hereafter referred to as "IEC Publication(s)"). Their preparation is entrusted to technical committees; any IEC National Committee interested in the subject dealt with may participate in this preparatory work. International, governmental and non-governmental organizations liaising with the IEC also participate in this preparation. IEC collaborates closely with the International Organization for Standardization (ISO) in accordance with conditions determined by agreement between the two organizations.
2) The formal decisions or agreements of IEC on technical matters express, as nearly as possible, an international consensus of opinion on the relevant subjects since each technical committee has representation from all interested IEC National Committees.
3) IEC Publications have the form of recommendations for international use and are accepted by IEC National Committees in that sense. While all reasonable efforts are made to ensure that the technical content of IEC Publications is accurate, IEC cannot be held responsible for the way in which they are used or for any misinterpretation by any end user.
4) In order to promote international uniformity, IEC National Committees undertake to apply IEC Publications transparently to the maximum extent possible in their national and regional publications. Any divergence between any IEC Publication and the corresponding national or regional publication shall be clearly indicated in the latter.
5) IEC itself does not provide any attestation of conformity. Independent certification bodies provide conformity assessment services and, in some areas, access to IEC marks of conformity. IEC is not responsible for any services carried out by independent certification bodies.
6) All users should ensure that they have the latest edition of this publication.
7) No liability shall attach to IEC or its directors, employees, servants or agents including individual experts and members of its technical committees and IEC National Committees for any personal injury, property damage or other damage of any nature whatsoever, whether direct or indirect, or for costs (including legal fees) and expenses arising out of the publication, use of, or reliance upon, this IEC Publication or any other IEC Publications.
8) Attention is drawn to the Normative references cited in this publication. Use of the referenced publications is indispensable for the correct application of this publication.
9) IEC draws attention to the possibility that the implementation of this document may involve the use of (a) patent(s). IEC takes no position concerning the evidence, validity or applicability of any claimed patent rights in respect thereof. As of the date of publication of this document, IEC had not received notice of (a) patent(s), which may be required to implement this document. However, implementers are cautioned that this may not represent the latest information, which may be obtained from the patent database available at https://patents.iec.ch. IEC shall not be held responsible for identifying any or all such patent rights.

IEC 62394 has been prepared by IEC technical committee 100: Audio, video and multimedia systems and equipment. It is an International Standard.

This fifth edition cancels and replaces the fourth edition published in 2022. This edition constitutes a technical revision.

This edition includes the following significant technical changes with respect to the previous edition:

a) updates of the device object super class specifications for the property configurations shared by all device objects;
b) modification and addition of the property configurations defined by each object;
c) addition of new device objects and their property configurations;
d) updates to Bibliography.

Documents
Document Sharing Hub

The text of this International Standard is based on the following documents:

Draft	Report on voting
100/4072/CDV	100/4157/RVC

Full information on the voting for its approval can be found in the report on voting indicated in the above table.

The language used for the development of this International Standard is English.

This document was drafted in accordance with ISO/IEC Directives, Part 2, and developed in accordance with ISO/IEC Directives, Part 1 and ISO/IEC Directives, IEC Supplement, available at www.iec.ch/members_experts/refdocs. The main document types developed by IEC are described in greater detail at www.iec.ch/publications.

The committee has decided that the contents of this document will remain unchanged until the stability date indicated on the IEC website under webstore.iec.ch in the data related to the specific document. At this date, the document will be

- reconfirmed,
- withdrawn, or
- revised.

IMPORTANT – The "colour inside" logo on the cover page of this document indicates that it contains colours which are considered to be useful for the correct understanding of its contents. Users should therefore print this document using a colour printer.

Documents
Document Sharing Hub

Full document details: BS IEC 62394:2024

INTRODUCTION

Consumer products are often repaired by service workshops, which service a wide range of products developed by different manufacturers.

For highly complex products, fault diagnosis becomes increasingly difficult and time consuming.

To facilitate diagnosis, manufacturers often develop built-in diagnostic software that communicates with an external diagnostic unit through a service diagnostic interface (SDI).

To avoid the need for a service workshop to purchase several different diagnostic units from different manufacturers for different products, a standardized SDI is proposed for use by all manufacturers of any products requiring a diagnostic interface. The result will be that only one SDI is needed in the service workshops.

The SDI should be suitable for diagnosis in a facilities or household appliances network in which different products from different manufacturers are connected together. The interface should also allow for future developments.

The standard SDI should:

- be usable in future products,
- be easily connectable to a product or a network,
- be inexpensive,
- not limit product design.

Documents
Document Sharing Hub

Full document details: BS IEC 62394:2024

SERVICE DIAGNOSTIC INTERFACE FOR CONSUMER ELECTRONICS PRODUCTS AND NETWORKS – IMPLEMENTATION FOR ECHONET

1 Scope

This International Standard specifies requirements for service diagnostic software to be implemented in products that incorporate a digital interface. It does not specify requirements for carrying out remote diagnosis or for manufacturer-dependent software.

The Service Diagnostic Interface (SDI) requires an external controller (exclusive or general-purpose/PC) into which service diagnostic software can be loaded. Parts of the controller software are standardized while other parts are proprietary to the manufacturers.

To reach a common approach in servicing all products from all manufacturers, it is necessary to standardize specific items to be tested in products and certain aspects of controllers' diagnostic software.

The SDI is based upon ECHONET specification version 2.11, ECHONET Lite specification version 1.13, and APPENDIX Detailed Requirements for ECHONET Device objects Release Q rev. 1, because this interface will be used in future products. The use of this connection and existing communication protocols enable implementation in products at a low cost, with maximum flexibility and efficiency.

The SDI consists of

- specific hardware and software requirements of the device under test (DUT);
- specific requirements of the controller:
  - the service software;
  - an ECHONET interface;
- the connection between the controller and the DUT.

This document provides the minimal requirements necessary to carry out computerized diagnosis. It covers the standardized software of the controller as well as the standardized software and provisions in the DUT.

2 Normative references

There are no normative references in this document.

3 Terms, definitions and abbreviated terms

3.1 Terms and definitions

For the purposes of this document, the following terms and definitions apply.

ISO and IEC maintain terminological databases for use in standardization at the following addresses:

- IEC Electropedia: available at http://www.electropedia.org/
- ISO Online browsing platform: available at http://www.iso.org/obp

Documents
Document Sharing Hub

Full document details: BS IEC 62394:2024

3.1.1
ECHONET specifications
specifications designed to enable the use of various kinds of transmission media (for example, power lines, low-power radio frequencies, ETHERNET, Bluetooth®[1])

3.1.2
remote diagnosis
diagnosis of a product via telephone, Internet, etc.

3.2 Abbreviated terms

CpESV	compound ECHONET service
DEA	destination ECHONET address
DEOJ	destination ECHONET object
DUT	device under test
EBC	ECHONET byte counter
EDATA	ECHONET DATA
EDT	ECHONET property value data
EHD	ECHONET headers
ELDATA	ECHONET Lite DATA
ELHD	ECHONET Lite headers
ELPDC	ECHONET Lite Property data counter
ELSV	ECHONET Lite service
EOJ	ECHONET objects
EPC	ECHONET property
ESV	ECHONET service
EVPS	electric vehicle power system
FIT	feed-in tariff
LSB	least significant bit
MSB	most significant bit
OEM	original equipment manufacturer
OHD	object message header
OPC	processing target property counter
PC	personal computer
PCS	power conditioning system
PDC	property data counter
PEDATA	Plane EDATA (Plane ECHONET data)
ROM	read-only memory
SDI	service diagnostic interface
SEA	source ECHONET address
SEOJ	source ECHONET object
SOC	state of charge
TID	transaction ID
V2H	vehicle to Home

1 ETHERNET is the trademark of a product supplied by Xerox Corporation. Bluetooth is the trademark of a product supplied by Bluetooth SIG, Inc. This information is given for the convenience of users of this standard and does not constitute an endorsement by IEC of the product named. Equivalent products may be used if they can be shown to lead to the same results.

AVA Documents
Document Sharing Hub
Full document details: BS IEC 62394:2024

4 Different types of service diagnostics

4.1 Stand-alone products

For stand-alone products, a connection is made between the diagnostic controller and the DUT, where the DUT is from any manufacturer and of any type.

4.2 Facilities or household appliances network

In a facilities or household appliances network, a connection is made between the diagnostic controller and a network of facilities or household appliances. Several different facilities or household appliances are interconnected and not all of them are necessarily from the same manufacturer.

In this case, the SDI shall list the products on the network, detect which facilities or appliances are causing problems, and diagnose the product concerned.

4.3 Remote diagnosis

In addition to the configurations described in 4.1 and 4.2, a link can be made (for example, via telephone, the Internet, etc.) between the diagnostic controller in the workshop and a DUT's network at the customer's home. Therefore, if a product has both an ECHONET interface and a remote connection capability, this product should be able to transfer the diagnostic data, as described in this document, through the remote connection.

5 SDI requirements

5.1 General

The SDI consists of

- hardware and software, both in the DUT and in the test equipment ("tester");
- the connection between the tester and the DUT.

The total SDI can be divided into the parts described in 5.2 and 5.3.

5.2 Hardware

5.2.1 Tester hardware

The hardware used for testing shall be a controller-exclusive computer or general-purpose controller (for example, a desktop or laptop PC) provided with at least one suitable network interface which enables transfer of the ECHONET frame, as specified in 7.2, and runs the necessary diagnostic software.

NOTE The minimum requirements for the tester hardware depend on the respective tester platform.

5.2.2 Facilities or household appliances network

For the connection between the tester and the DUT, the facilities or household appliances network shall be used. For diagnosis of the DUT using the network, the tester shall be connected to the facilities or household appliances network that conforms to the requirements of 7.2 or 8.2.

5.2.3 DUT hardware

5.2.3.1 General

The DUT shall be provided with at least one network interface which enables the transfer of the ECHONET frame as specified in 7.2.

AVA Documents
Document Sharing Hub

5.2.3.2 Facilities or household appliances network

For diagnosis on a network, the tester shall, where possible, be connected to a facilities or household appliances network that conforms to the requirements of 7.1.

5.3 Software

5.3.1 General

The software for the SDI can be divided into two parts (tester and DUT) of which each part again can be divided into mandatory (SDI common) software and non-mandatory (manufacturer-dependent) software.

5.3.2 Tester software

The software platform of the tester shall be able to handle the ECHONET frame as specified in 7.2.

The SDI common software on the tester shall have the following functionalities:

a) initiate a service of "property value read request", as specified in 7.2.9;

b) read out the service of "property value read response" and "property value notification" of all products, as specified in 7.2.9;

c) display a list of all products connected to the facilities or household appliances network to which the tester is connected. On the display shall be listed the
   - manufacturer code property,
   - place-of-business code property,
   - product code property,
   - serial number property,
   - date-of-manufacture property;

d) display an indication of the fault status property which describes the occurrence of an error in an actual device. The property code used as a property value is 0x41 when an error exists or 0x42 when no error exists and is found to be "OK" or "Not OK" as specified in 9.3.6;

e) display an indication of the fault content property which describes the content of an error in an actual device as specified in 9.3.6.

5.3.3 DUT software requirements for the SDI

The DUT shall be able to handle the ECHONET frame as specified in 7.2.

In addition, the SDI common software in the DUT shall be able to

a) run a self-test routine,

b) receive a service of "property value read request" as specified in 7.2.9 which is initiated by the tester and response a service of "property value read response" as specified in 7.2.9,

c) initiate a service of "property value notification" as specified in 7.2.9.

6 Tester software requirements

6.1 Reading the property diagnostic unit

The common application shall be able to retrieve and display information from the SDI-compliant devices specified in 6.1 to 6.3.

Documents
Document Sharing Hub

Full document details: BS IEC 62394:2024

6.2 General information (product identification)

The manufacturer code property, the place-of-business code property, the product code property and the serial number property shall be read from the DUT and displayed. These property data shall always be available as specified in 9.3. The tester shall display this information for all devices in the system.

NOTE The manufacturer code displayed might not be the same as the name on the physical device.

6.3 Diagnosis information

After start-up of the general information software, the diagnosis information shall be displayed.

7 Control protocol 1st

7.1 General

The ECHONET specifications were designed to enable the use of various kinds of transmission media (for example, power line, low-power radio frequency, ETHERNET, Bluetooth®). Slow transmission speeds discourage large data transfers, and it is desirable to reduce the mounting load on simple devices. In the light of this situation, ECHONET specifies the frame format for the ECHONET communication middleware block to minimize the message size while fulfilling the requirements of the communications layer structure.

7.2 Frame format

7.2.1 General

Figure 1 shows the content of the ECHONET communication middleware frame format. In the ECHONET communication middleware specifications, messages exchanged between ECHONET communications processing blocks are called ECHONET frames. ECHONET frames are roughly divided into two types depending on the specified EHD: the secure message format, of which the EDATA section is enciphered, and the plain message format, of which the EDATA section is not enciphered. The secure message format and the plain message format are subdivided into three formats depending on the specified EHD (see Table 4). Therefore, the following six different message formats are available for ECHONET frames.

a) Plain basic message format

   Insecure communication is performed so that one message is used to view or change the contents of one property.

b) Plain compound message format

   Insecure communication is performed so that one message is used to view or change the contents of two or more properties.

c) Plain arbitrary message format

   Insecure communication is performed so as to exchange information that complies with vendor-unique specifications.

d) Secure basic message format

   Secure communication is performed so that one message is used to view or change the contents of one property.

e) Secure compound message format

   Secure communication is performed so that one message is used to view or change the contents of two or more properties.

f) Secure arbitrary message format

   Secure communication is performed so as to exchange information that complies with vendor-unique specifications.

Documents
Document Sharing Hub

Full document details: BS IEC 62394:2024

Figure 1 shows the ECHONET frame structure for the plain message format.

Detailed specifications for each message component will be provided in the following subclauses.

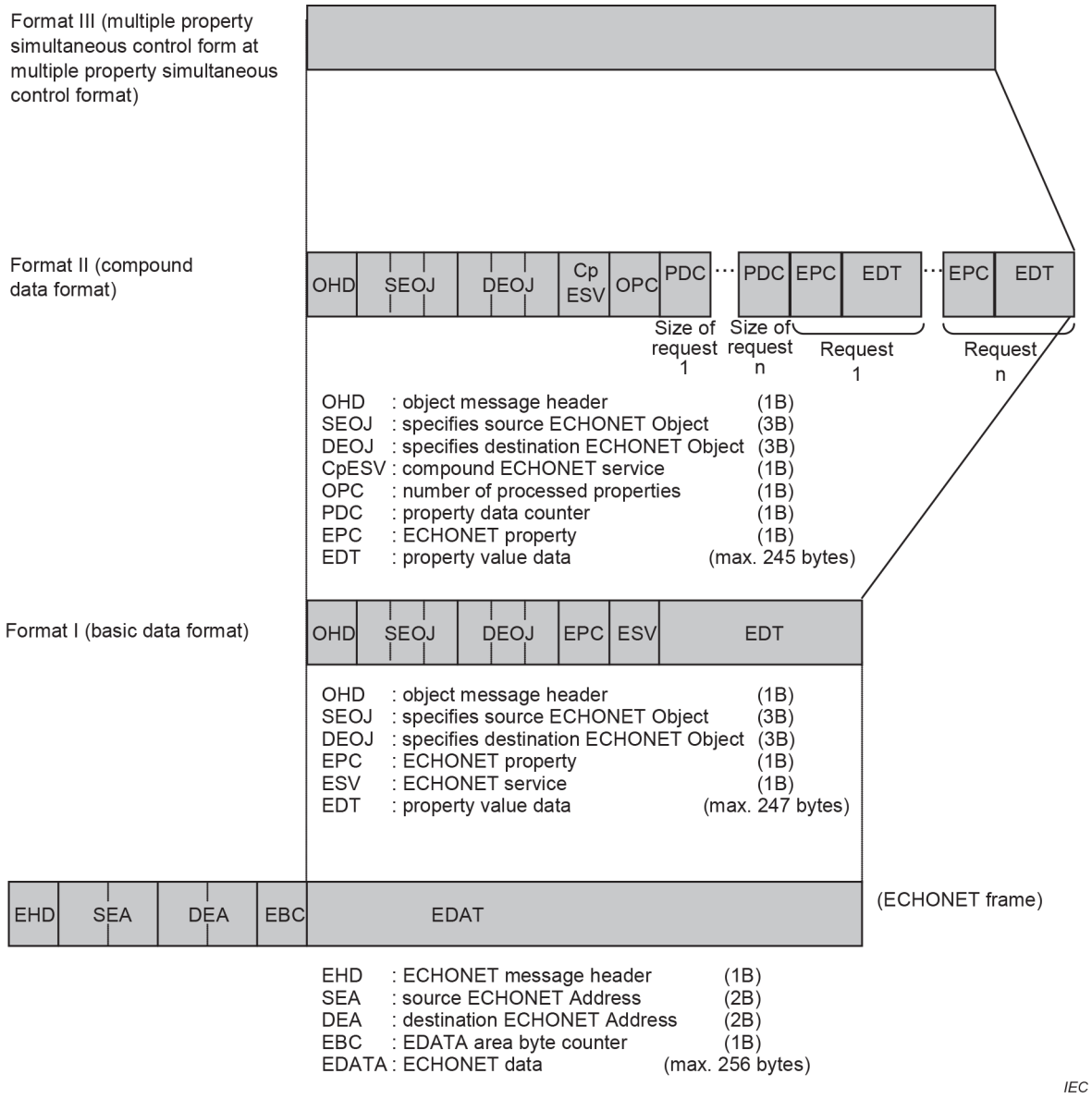

Figure 1 – ECHONET frame for plain data format

7.2.2 ECHONET headers (EHD)

This subclause provides detailed specifications for the ECHONET header (EHD) shown in Figure 1 and Figure 2.

Documents
Document Sharing Hub
Full document details: BS IEC 62394:2024

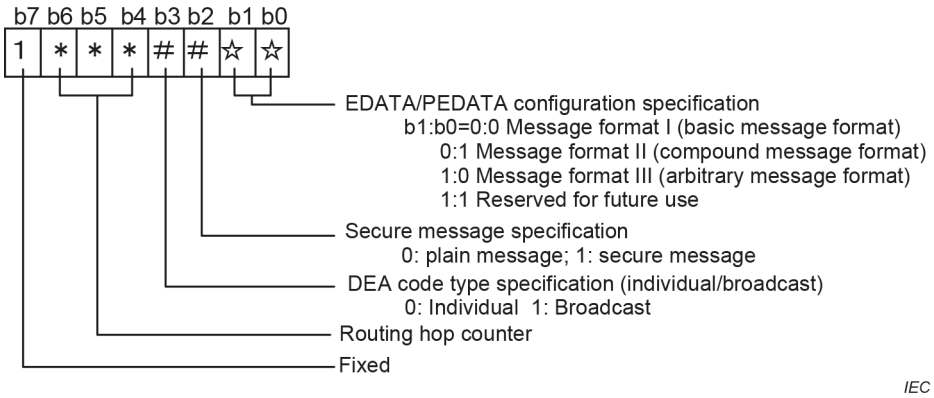

NOTE When b7 = 0, b0 to b6 will be specified separately (reserved for future use).

Figure 2 – EHD detailed specifications

The combination of b1 and b0 specifies the message format for EDATA/PEDATA. When b1:b0 = 0:0, it indicates Message Format I (basic message format), which allows one message to operate on one property of one object. When b1:b0 = 0:1, it indicates Message Format II (compound message format), which allows one message to operate on two or more properties of one object. When b1:b0 = 1:0, it indicates Message Format III (arbitrary message format), of which EDATA/PEDATA section is in an arbitrary format.

Bit b2 indicates whether the EDATA section is enciphered or not. When b2 = 1, it means that the EDATA section is enciphered. When b2 = 0, it means that the EDATA section is not enciphered.

Bit b3 specifies whether the DEA (destination ECHONET address) shown in Figure 3 is a broadcast address or an individual address. When b3 = 1, this indicates that a broadcast address is stipulated by the DEA code. When b3 = 0, this indicates that an individual address is stipulated by the DEA code. Broadcast address codes are discussed in 7.2.3.

Bits b4, b5, and b6 constitute a routing hop counter, which can be manipulated only by ECHONET routers. When a message received at one subnet of an ECHONET router is forwarded to another subnet, the counter is incremented. For every transmission from an ordinary node, a hop count of 0 is used. The relationship between b4, b5, and b6 and the hop count is shown in Table 1. The number of hops can be set to a value between 0 and 7.

Table 1 – Bit pattern for hop count

b6	b5	b4	Hop count (router passes)
0	0	0	0
0	0	1	1
0	1	0	2
0	1	1	3
1	0	0	4
1	0	1	5
1	1	0	6
1	1	1	7

Documents
Document Sharing Hub
Full document details: BS IEC 62394:2024

7.2.3 Source/Destination ECHONET address (SEA/DEA)

This subclause provides detailed specifications for the source ECHONET address (SEA) and destination ECHONET address (DEA) shown in Figure 3. Figure 3 shows the configuration of the source ECHONET address (SEA) and the destination ECHONET address (DEA) prevailing when an individual address is stipulated by setting b3 of EHD to 0.

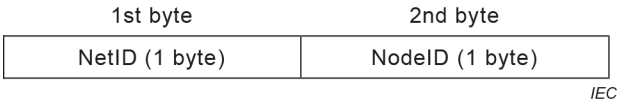

Figure 3 – Configuration of SEA and DEA when an individual address is specified

When b3 of EHD is set to 1 to specify a broadcast, the destination ECHONET address (DEA) becomes a code indicating a broadcast message for a specific ECHONET address group (including a general broadcast). The DEA configuration in this case is shown in Table 2. The broadcast target stipulation code is shown in Figure 4 and Figure 5.

Table 2 – DEA (broadcast-stipulated) address configuration

Broadcast type stipulation code	Broadcast target stipulation code	Remarks
0x00	Specifies the node groups to be targeted for a broadcast within all subnets. For node selection, see Figure 4.	An intra-domain broadcast. In all subnets within a domain, a broadcast is sent to the nodes stipulated by the broadcast target stipulation code.
0x01	Specifies the node groups to be targeted for a broadcast within its own subnet. For node group selection, see Figure 4.	An intra-own-subnet broadcast. In the own subnet, a broadcast is sent to the nodes stipulated by the broadcast target stipulation code.
0x02	All nodes within the subnet having the Net ID code stipulated by the "broadcast target stipulation code" are targeted.	A general broadcast within a specified subnet. A broadcast is sent to all nodes within the subnet stipulated by the broadcast target stipulation code.
0x03~0x7F	Reserved for future use.	
0x80~0xFF	Open to user.	Used when a system manager will manage the system in a collective housing unit or small office building.

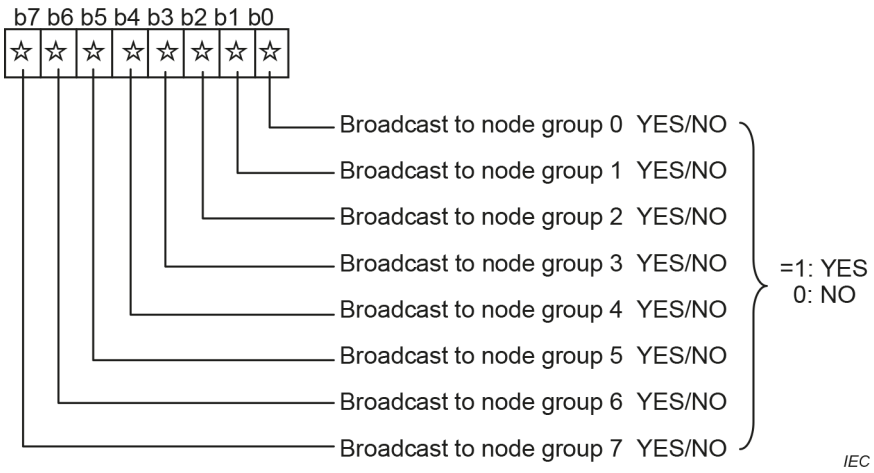

Figure 4 – Broadcast target stipulation code

Documents
Document Sharing Hub
Full document details: BS IEC 62394:2024

	0	8	4	C	2	A	6	E	1	9	5	D	3	B	7	F	
0																	Group 0
8																	
4																	Group 1
C																	
2																	Group 2
A																	
6																	Group 3
E																	
1																	Group 4
9																	
5																	Group 5
D																	
3																	Group 6
B																	
7																	Group 7
F																	

IEC

Figure 5 – Node group stipulation bit specifications

7.2.4 ECHONET byte counter (EBC)

EBC indicates the size of the ECHONET data region (EDATA region) shown in Figure 1. The size is variable in 1-byte increments. The acceptable EDATA region size ranges from 6 bytes to 256 bytes (0x06 to 0xFF; 0x00 = 256). The lower limit is 6 bytes, which indicates that a message consists of at least 6 bytes. The reason is that either the SEOJ or the DEOJ needs to be specified with the EPC to ESV options specified for a plain message. A 6-byte message can be a message requesting an ESV with the DEOJ specified or a message carrying a "response of processing impossible" for ESV with the SEOJ specified.

7.2.5 ECHONET data (EDATA)

The DATA region for messages exchanged by the ECHONET communication middleware.

Maximum size: 256 bytes.

7.2.6 Object message header (OHD)

This subclause provides detailed specifications for the object message header (OHD) shown in Figure 1. Detailed specifications are shown in Figure 6. The state in which b1 and b0 are both 0 will never occur.

Documents
Document Sharing Hub

Full document details: BS IEC 62394:2024

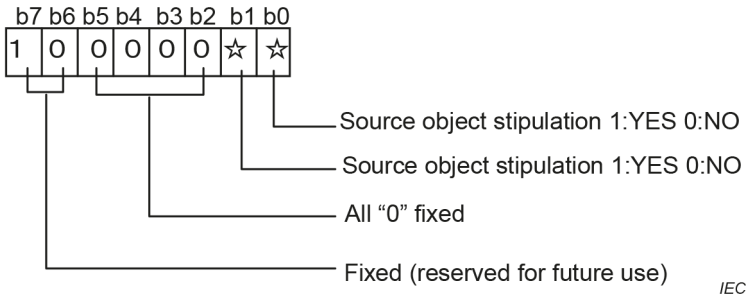

NOTE When b6 and b7 have values other than b6 = 0 and b7 = 1, b0 to b5 will have different meanings.

The meanings of bits b0 to b5 when b6 and b7 have values other than b6 = 0 and b7 = 1 will be stipulated in the future (reserved for future use).

Figure 6 – OHD detailed specifications

7.2.7 ECHONET objects (EOJ)

This subclause provides detailed specifications for the source ECHONET object (SEOJ) code and destination ECHONET object (DEOJ) code shown in Figure 1. Detailed specifications are shown in Figure 7.

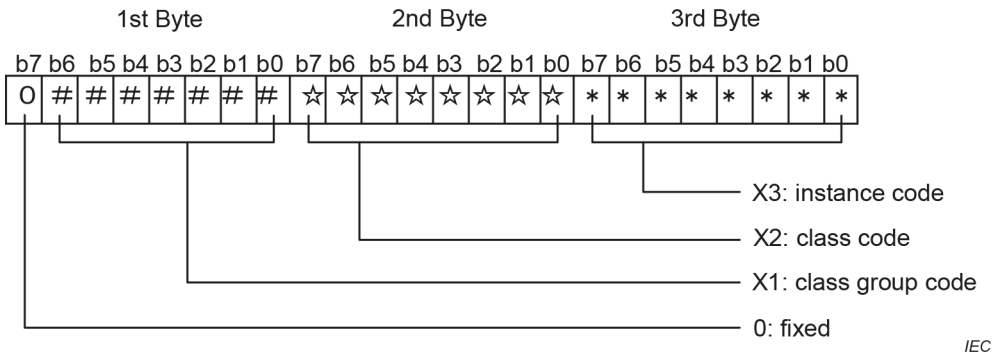

NOTE The meanings of the bits when b7 of the 1st byte is 1 will be stipulated in the future (reserved for future use).

Figure 7 – EOJ detailed specifications

ECHONET objects are described using the format [X1.X2] and [X3], with these formats to be specified as shown below. (However, "." is used only for descriptive purposes and does not mean a specific code.) The object class is designated by the combination of X1 and X2, while X3 shows the class instance. A single ECHONET node may contain more than one instance of the same class, in which case X3 is used to identify each one.

The specific items in Table 3 were specified on the basis of JEM 1439 (see Clause 9.64). Detailed specifications for the objects shown here will be developed over time and, during this phase; specifications for the objects themselves (i.e., present/not present) will be further reviewed.

The instance code 0x00 is regarded as a special code (code for specifying all instances). When a DEOJ for which this code is specified is received, it is handled as a code specifying a broadcast to all instances of a specified class.

- X1 : class group code 0x00-0x7F. For details, refer to Table 3.
- X2 : class code 0x00-0xFF.
- X3 : instance code 0x00-0xFF.

Documents
Document Sharing Hub
Full document details: BS IEC 62394:2024

The identifier code is used when more than one of the same class specified by [X1.X2] exists within the same node.

However, 0x00 is used as a general broadcast to all instances of class specified with [X1.X2].

Table 3 – List of class group codes

Class group code	Group name	Remarks
0x00	Sensor-related device class group	
0x01	Air conditioner-related device class group	
0x02	Housing/facility-related device class group	Includes lighting
0x03	Cooking/housework-related device class group	
0x04	Health-related device class group	
0x05	Management/control-related device class group	
0x06	AV-related device class group	
0x07~0x0C	Reserved for future use	
0x0D	Service class group	
0x0E	Profile class group	
0x0F	User definition class group	
0x10~0x1F	Communications definition class group for stipulation of status notification method	
0x20~0x2F	Communications definition class group for stipulation of setting control reception method	
0x30~0x3F	Communications definition class group for linked settings (action settings)	
0x40~0x4F	Communications definition class group for linked settings (trigger settings)	
0x50~0x5F	Secure communication access property set-up class	
0x60~0x7F	Reserved for future use	

7.2.8 ECHONET property (EPC)

This subclause provides detailed specifications for the ECHONET property (EPC) code shown in Figure 1. Detailed specifications are shown in Figure 8. The EPC specifies a service target function. Each object stipulated by X1 (class group code) and X2 (class code), described in 7.2.7, is specified here.

When a specified object changes, the target function also changes even when the code remains unchanged. However, the detailed specifications are designed to ensure that, whenever possible, the same functions will have the same code.

Specific code values for each object are stipulated in Figure 45. These codes correspond to the object property identifiers in the object definitions.

Documents
Document Sharing Hub

Full document details: BS IEC 62394:2024

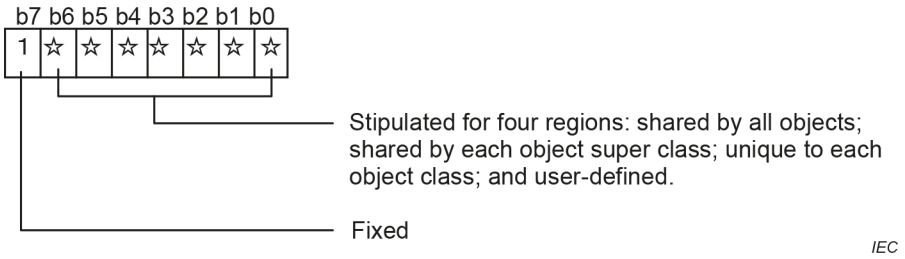

NOTE When b7 = 0, the other bits will be defined differently.

Figure 8 – EPC detailed specifications

7.2.9 ECHONET service (ESV)

7.2.9.1 General

This subclause provides detailed specifications for the ECHONET service (ESV) code shown in Figure 1. Detailed specifications are shown in Figure 9.

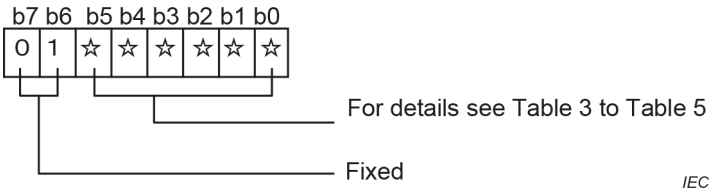

NOTE In cases other than when b7:b6 = 0:1, the meaning of values b0 – b5 will be specified separately.

Figure 9 – ESV detailed specifications

This code stipulates manipulation of the properties stipulated by EPC. The three main kinds of operations are shown below. There are also two kinds of responses: the "response", which is given when the stipulated properties exist; and the "response not possible", which is given when the requested properties (including array elements) do not exist or when the stipulated service cannot be processed.

"Request"/"Response" (response/response not possible)/"Notification".

A "response" is considered to be a reply to a "request" that requires a response; when the object stipulated in the DEOJ exists, as a rule it is either "response" or "response not possible" (stipulated processing cannot be accepted, or the stipulated object exists but the property does not). When the request requires no response and the stipulated object does not exist, no response is made.

There are two types of "notification": one for transmitting the own-property information autonomously and the other for sending a response to a notification request. However, these two types have the same code.

Three specific operations are provided: write (response required/no response required), read, and notification (notification/notification with response required). The 12 operations shown below are set in consideration of whether or not the content of the given property is an array.

a) Property value write (response required/no response required)

b) Property value read

c) Property value notification

d) Property value array-element-stipulated write (response required/no response required)

e) Property value array-element-stipulated read

AVA Documents Document Sharing Hub

f) Property value array-element-stipulated notification

g) Property value array-element-stipulated addition (response required/no response required)

h) Property value array-element-stipulated deletion (response required/no response required)

i) Property value array-element-stipulated existence confirmation

j) Property value array element addition (response required/no response required)

k) Property value notification (response required)

l) Property value array-element-stipulated notification (response required)

7.2.9.2 Relationship between request and response

The relationship between the message configuration (presence or absence of an SEOJ and a DEOJ) and EPC and ESV is described below.

- The EPC in an ECHONET message stipulating only the SEOJ indicates the properties of the sender object specified in the SEOJ. In this case, the ESV contains an autonomous "notification" or "notification" or "response" in response to a request for properties specified in the SEOJ and the EPC. If the ESV is a "request" in such a case, the received message is treated as an illegal message.
- The EPC in an ECHONET message stipulating only the DEOJ indicates the properties of the destination object specified in the DEOJ. In this case, the ESV contains a "request" regarding the properties specified in the DEOJ and the EPC. If the ESV is a "response" or a "notification" in such a case, the received message is treated as an illegal message.
- For ECHONET messages stipulating both the SEOJ and the DEOJ, the ESV value is used to determine whether the EPC is stipulated by the SEOJ or the DEOJ. When the ESV is a "response" or a "notification", the EPC is considered to be a component of the object specified by the SEOJ and is viewed as a "response" or "notification" directed towards the object stipulated in the DEOJ. When the ESV is a "request", the EPC is considered to be a component of the DEOJ and is viewed as a "request" from the object stipulated in the SEOJ.

Table 4, Table 5 and Table 6 show specific ESV code assignments based on the content described above. Specific descriptions of a) through l) in 7.2.9.1 are provided in (a) through (l) of the remarks column in the relevant table. In the figures given in (a) (Figure 10) through (l) (Figure 21), the DEOJ for "requests" is shown as an individually stipulated code. However, when the DEOJ indicates a broadcast to all instances of a specified class (when the DEOJ's X3 = 0x00), a response is transmitted with both "process-not-possible" response and "response" configured for each target instance. In the table, the "array elements" described above are presented as "elements".

Documents
Document Sharing Hub

Full document details: BS IEC 62394:2024