BS IEC 62548-1:2023

BSI Standards Publication

Photovoltaic (PV) arrays

Part 1: Design requirements

Documents
Document Sharing Hub

Full document details: BS IEC 62548-1:2023

National foreword

This British Standard is the UK implementation of IEC 62548-1:2023. It supersedes BS IEC 62548:2016, which is withdrawn.

The UK participation in its preparation was entrusted to Technical Committee GEL/82, Photovoltaic Energy Systems.

A list of organizations represented on this committee can be obtained on request to its committee manager.

Contractual and legal considerations

This publication has been prepared in good faith, however no representation, warranty, assurance or undertaking (express or implied) is or will be made, and no responsibility or liability is or will be accepted by BSI in relation to the adequacy, accuracy, completeness or reasonableness of this publication. All and any such responsibility and liability is expressly disclaimed to the full extent permitted by the law.

This publication is provided as is, and is to be used at the recipient's own risk.

The recipient is advised to consider seeking professional guidance with respect to its use of this publication.

This publication is not intended to constitute a contract. Users are responsible for its correct application.

© The British Standards Institution 2023
Published by BSI Standards Limited 2023

ISBN 978 0 539 03021 1

ICS 27.160

Compliance with a British Standard cannot confer immunity from legal obligations.

This British Standard was published under the authority of the Standards Policy and Strategy Committee on 31 December 2023.

Amendments/corrigenda issued since publication

Date	Text affected

Documents
Document Sharing Hub

Full document details: BS IEC 62548-1:2023

IEC 62548-1

Edition 1.0 2023-12

INTERNATIONAL STANDARD

colour inside

Photovoltaic (PV) arrays – Part 1: Design requirements

INTERNATIONAL ELECTROTECHNICAL COMMISSION

ICS 27.160

ISBN 978-2-8322-7848-2

Warning! Make sure that you obtained this publication from an authorized distributor.

® Registered trademark of the International Electrotechnical Commission

Documents
Document Sharing Hub

Full document details: BS IEC 62548-1:2023

CONTENTS

FOREWORD 6
1 Scope 8
2 Normative references 8
3 Terms, definitions, symbols and abbreviated terms 11
3.1 Terms and definitions 11
3.2 Symbols 17
3.3 Abbreviated terms 20
4 Compliance with IEC 60364 series 20
5 PV array system configuration 21
5.1 General 21
5.1.1 Functional configuration of a PV system 21
5.1.2 PV system topologies 21
5.1.3 Array electrical diagrams 22
5.1.4 Use of PCE with multiple DC inputs 28
5.1.5 PV arrays using DCUs 28
5.1.6 Series-parallel configuration 33
5.1.7 Batteries in systems 33
5.1.8 Backfeed and reverse currents 34
5.1.9 Considerations due to prospective fault current conditions within a PV array 34
5.1.10 Considerations due to operating temperature 34
5.1.11 Performance issues 35
5.1.12 Potential induced degradation 36
5.1.13 Corrosion 36
5.1.14 Mechanical design 36
5.1.15 Mechanical loads on PV structures 37
6 Safety issues 39
6.1 General 39
6.2 Protection against electric shock 39
6.2.1 General 39
6.2.2 Protective measure: double or reinforced insulation 39
6.2.3 Protective measure: extra-low-voltage provided by SELV or PELV 39
6.3 Protection against thermal effects 39
6.3.1 General 39
6.3.2 Protection against fire caused by arcs 40
6.3.3 Protection against arc flash 40
6.4 Protection against the effects of insulation faults 40
6.4.1 General 40
6.4.2 Segregation of PV circuits from other circuits 41
6.4.3 Earth fault detection and indication requirements 41
6.5 Protection against overcurrent 47
6.5.1 General 47
6.5.2 Requirement for overcurrent protection 47
6.5.3 Requirements for overcurrent protection of circuits 48
6.5.4 Overcurrent protection for PV systems connected to batteries 50
6.5.5 Overcurrent protection location 51
6.6 Protection against effects of lightning and overvoltage 51

AVA Documents
Document Sharing Hub

6.6.1 General ... 51
6.6.2 Protection against overvoltage ... 52
7 Selection and erection of electrical equipment ... 53
7.1 General ... 53
7.2 Component requirements ... 54
7.2.1 General ... 54
7.2.2 Current rating of PV circuits ... 54
7.2.3 PV modules ... 55
7.2.4 PV array and PV string combiner boxes ... 56
7.2.5 Fuses ... 57
7.2.6 Circuit breakers used for overcurrent protection ... 57
7.2.7 Isolation means and isolation means with breaking capabilities ... 58
7.2.8 Cables ... 60
7.2.9 Plugs, sockets and connectors in PV circuits ... 62
7.2.10 Wiring in combiner boxes ... 63
7.2.11 Bypass diodes ... 63
7.2.12 Blocking diodes ... 64
7.2.13 Power conversion equipment (PCE) including DC conditioning units (DCUs) ... 64
7.3 Location and installation requirements ... 65
7.3.1 Isolation means ... 65
7.3.2 Earthing and bonding arrangements ... 67
7.3.3 Wiring system ... 70
8 Acceptance ... 74
9 Operation/maintenance ... 74
10 Marking and documentation ... 74
10.1 Equipment marking ... 74
10.2 Requirements for signs ... 74
10.3 Identification of a PV installation ... 74
10.4 Labelling of PV array and PV string combiner boxes ... 74
10.5 Labelling of isolation means ... 75
10.5.1 General ... 75
10.5.2 PV array isolation means with breaking capabilities ... 75
10.6 Warning sign for anti-PID equipment ... 75
10.7 Documentation ... 75
Annex A (informative) Examples of signs ... 76
Annex B (informative) Examples of system earthing configurations in PV arrays ... 77
Annex C (informative) Blocking diode ... 80
C.1 General ... 80
C.2 Use of blocking diodes to prevent overcurrent/fault current in arrays ... 80
C.3 Examples of blocking diode use in fault situations ... 80
C.3.1 General ... 80
C.3.2 Short circuit in PV string ... 80
C.4 Specification of blocking diode ... 82
C.5 Heat dissipation design for blocking diode ... 82
Annex D (informative) Arc fault detection and interruption in PV arrays ... 84
Annex E (normative) DVC limits ... 85

Documents
Document Sharing Hub
Full document details: BS IEC 62548-1:2023

Annex F (normative) Determination of maximum voltage and maximum currents in PV circuits 86
F.1 $U_{OC\ MAX}$ 86
F.1.1 PV array maximum voltage 86
F.1.2 PV strings constructed using DC conditioning units 87
F.2 String maximum current 88
F.3 Calculation of potential fault currents originating from the array 88
F.3.1 General 88
F.3.2 String 88
F.3.3 Sub-array 88
F.3.4 Array 88
F.4 K_I factor – general 89
F.5 K_{Corr} factor – under unique environmental conditions 89
F.6 K_{Corr} factor – non optimally oriented monofacial arrays 90
F.7 K_{Corr} factor – bifacial arrays 90
F.8 K_{Corr} factor – for arrays containing non-optimally oriented bifacial modules 91
Annex G (normative) Backfeed current and PV reverse currents under fault conditions 92
G.1 General 92
G.2 Illustrated examples 92
G.3 Backfeed currents and PV reverse currents where subarrays are not combined in the PCE 94
Annex H (normative) Anti-PID 96
H.1 General 96
H.2 DC bias applied during night 96
H.3 DC bias applied to array output 97
H.4 DC bias applied to AC system 98
Annex I (informative) Arc flash 100
Annex J (normative) Qualification of DCU group voltage 101
J.1 Overview 101
J.2 Test 1: Maximum voltage operational test procedure 101
J.3 Test 2: Overvoltage test 101
Bibliography 103

Figure 1 – General functional configuration of a PV powered system 21
Figure 2 – PV array diagram – single string example 23
Figure 3 – PV array diagram – multiple parallel string example 24
Figure 4 – PV array diagram – multiple parallel string example with array divided into sub-arrays 25
Figure 5 – PV array example using a PCE with multiple MPPT DC inputs 26
Figure 6 – PV array example using a PCE with multiple DC inputs internally connected to a common DC bus 27
Figure 7 – PV string constructed using DCUs 29
Figure 8 – Example of partial DCU string 30
Figure 9 – PV parallel strings constructed using DCUs 31
Figure 10 – PV string(s) connected to DCUs 32

Documents
Document Sharing Hub
Full document details: BS IEC 62548-1:2023

Figure 11 – Example of a PV array diagram where strings are grouped under one overcurrent protection device per group 50
Figure 12 – Examples of reinforced protection of wiring 62
Figure 13 – PV array exposed conductive parts functional earthing/bonding decision tree 68
Figure 14 – Exposed conductive parts earthing in a PV array 69
Figure 15 – Examples of string wiring with minimum loop area 73
Figure A.1 – Example of sign required on PV array combiner boxes (10.4) 76
Figure A.2 – Example of switchboard sign for identification of PV on a building 76
Figure B.1 – Functionally earthed system topologies 77
Figure B.2 – Non-earth-referenced system topologies 78
Figure B.3 – Non-separated system topologies 79
Figure C.1 – Effect of blocking diode where there is a short circuit in PV string 81
Figure C.2 – Effect of blocking diode where there is an earth fault on a system with earthing on the minus side 81
Figure C.3 – Effect of blocking diode where there is an earth fault on a system with positive side earthing 82
Figure D.1 – Examples of types of arcs in PV arrays 84
Figure G.1 – Backfeed from inverter with single PV input and internal battery 92
Figure G.2 – Inverter with multiple PV inputs and external battery 93
Figure G.3 – Backfeed where subarrays are combined externally to PCE 94
Figure H.1 – Example anti-PID control using bias on dc side at night 96
Figure H.2 – Example of anti-PID control using bias on DC side 97
Figure H.3 – Example of anti-PID control using bias on AC side 98

Table 1 – Requirements for different system types based on PCE separation and PV array functional earthing 43
Table 2 – Minimum insulation resistance thresholds for detection of failure of insulation to earth 44
Table 3 – Trip current of functional earthing overcurrent protection. 46
Table 4 – Overcurrent protection nominal rating 49
Table 5 – Calculation of the critical length L_{crit} 52
Table 6 – Minimum current rating of circuits 55
Table 7 – Isolation means in PV array installations 65
Table E.1 – Summary of the limits of the decisive voltage classes 85
Table F.1 – Voltage correction factors for crystalline and multi-crystalline silicon PV modules 87
Table F.2 – Environmental conditions covered by K_{Corr} = 1,0 89
Table F.3 – Example K_{Corr} values at different orientations and tilt for 47° north latitude 90

Documents
Document Sharing Hub
Full document details: BS IEC 62548-1:2023

INTERNATIONAL ELECTROTECHNICAL COMMISSION

PHOTOVOLTAIC (PV) ARRAYS – Part 1: DESIGN REQUIREMENTS

FOREWORD

1) The International Electrotechnical Commission (IEC) is a worldwide organization for standardization comprising all national electrotechnical committees (IEC National Committees). The object of IEC is to promote international co-operation on all questions concerning standardization in the electrical and electronic fields. To this end and in addition to other activities, IEC publishes International Standards, Technical Specifications, Technical Reports, Publicly Available Specifications (PAS) and Guides (hereafter referred to as "IEC Publication(s)"). Their preparation is entrusted to technical committees; any IEC National Committee interested in the subject dealt with may participate in this preparatory work. International, governmental and non-governmental organizations liaising with the IEC also participate in this preparation. IEC collaborates closely with the International Organization for Standardization (ISO) in accordance with conditions determined by agreement between the two organizations.
2) The formal decisions or agreements of IEC on technical matters express, as nearly as possible, an international consensus of opinion on the relevant subjects since each technical committee has representation from all interested IEC National Committees.
3) IEC Publications have the form of recommendations for international use and are accepted by IEC National Committees in that sense. While all reasonable efforts are made to ensure that the technical content of IEC Publications is accurate, IEC cannot be held responsible for the way in which they are used or for any misinterpretation by any end user.
4) In order to promote international uniformity, IEC National Committees undertake to apply IEC Publications transparently to the maximum extent possible in their national and regional publications. Any divergence between any IEC Publication and the corresponding national or regional publication shall be clearly indicated in the latter.
5) IEC itself does not provide any attestation of conformity. Independent certification bodies provide conformity assessment services and, in some areas, access to IEC marks of conformity. IEC is not responsible for any services carried out by independent certification bodies.
6) All users should ensure that they have the latest edition of this publication.
7) No liability shall attach to IEC or its directors, employees, servants or agents including individual experts and members of its technical committees and IEC National Committees for any personal injury, property damage or other damage of any nature whatsoever, whether direct or indirect, or for costs (including legal fees) and expenses arising out of the publication, use of, or reliance upon, this IEC Publication or any other IEC Publications.
8) Attention is drawn to the Normative references cited in this publication. Use of the referenced publications is indispensable for the correct application of this publication.
9) IEC draws attention to the possibility that the implementation of this document may involve the use of (a) patent(s). IEC takes no position concerning the evidence, validity or applicability of any claimed patent rights in respect thereof. As of the date of publication of this document, IEC had not received notice of (a) patent(s), which may be required to implement this document. However, implementers are cautioned that this may not represent the latest information, which may be obtained from the patent database available at https://patents.iec.ch. IEC shall not be held responsible for identifying any or all such patent rights.

IEC 62548-1 has been prepared by IEC technical committee 82: Solar photovoltaic energy systems. It is an International Standard.

This first edition cancels and replaces IEC 62548 published in 2016. This edition constitutes a technical revision.

This edition includes the following significant technical changes with respect to the previous edition:

a) Revised provisions for systems including DC to DC conditioning units.
b) Revision of mounting structure requirements.
c) Revised cable requirements.
d) Revision of Clause 6 on safety issues which includes provisions for protection against electric shock including array insulation monitoring and earth fault detection.
e) Revision of 7.2.7 and 7.3 with respect to isolation means.

Documents
Document Sharing Hub

f) Provisions for use of bifacial modules and modules mounted in non-optimal orientations.

g) New Annex F containing: K_I factor calculations for bifacial and non-optimally oriented systems; anti-PID equipment and arc flash.

The text of this International Standard is based on the following documents:

Draft	Report on voting
82/2174/FDIS	82/2193/RVD

Full information on the voting for its approval can be found in the report on voting indicated in the above table.

The language used for the development of this International Standard is English.

This document was drafted in accordance with ISO/IEC Directives, Part 2, and developed in accordance with ISO/IEC Directives, Part 1 and ISO/IEC Directives, IEC Supplement, available at www.iec.ch/members_experts/refdocs. The main document types developed by IEC are described in greater detail at www.iec.ch/standardsdev/publications.

The committee has decided that the contents of this document will remain unchanged until the stability date indicated on the IEC website under webstore.iec.ch in the data related to the specific document. At this date, the document will be

- reconfirmed,
- withdrawn, or
- revised.

IMPORTANT – The "colour inside" logo on the cover page of this document indicates that it contains colours which are considered to be useful for the correct understanding of its contents. Users should therefore print this document using a colour printer.

Documents
Document Sharing Hub

Full document details: BS IEC 62548-1:2023

PHOTOVOLTAIC (PV) ARRAYS – Part 1: DESIGN REQUIREMENTS

1 Scope

This document sets out design requirements for photovoltaic (PV) arrays including DC array wiring, electrical protection devices, switching and earthing provisions. The scope includes all parts of the PV array and final power conversion equipment (PCE), but not including energy storage devices, loads or AC or DC distribution network supplying loads.

The object of this document is to address the design safety requirements arising from the particular characteristics of photovoltaic systems. Direct current systems, and PV arrays in particular, pose some hazards in addition to those derived from conventional AC power systems, including the ability to produce and sustain electrical arcs with currents that are not greater than normal operating currents.

In systems supplying AC loads or circuits, the safety requirements mentioned in this document are however critically dependent on the inverters associated with PV arrays complying with the requirements of IEC 62109-1, IEC 62109-2 and IEC 62109-3.

Installation requirements are also critically dependent on compliance with the IEC 60364 series (see Clause 4).

PV arrays of less than 100 W and less than 35 V DC open circuit voltage at STC are not covered by this document.

PV arrays in grid interconnected systems connected to medium or high voltage systems are not covered in this document, except as required by IEC TS 62738. Variations and additional requirements for large-scale ground mounted PV power plants with restricted access to personnel are addressed in IEC TS 62738.

Additional requirements may be needed for more specialized installations, for example concentrating systems, tracking systems or building integrated PV.

This document also includes extra protection requirements of PV arrays when they are directly connected with batteries at the DC level.

Attention is drawn to the co-existence of IEC 60364-7-712 and IEC 62548. Both standards have been developed in close coordination, respectively by IEC technical committees 64 and 82.

2 Normative references

The following documents are referred to in the text in such a way that some or all of their content constitutes requirements of this document. For dated references, only the edition cited applies. For undated references, the latest edition of the referenced document (including any amendments) applies.

IEC 60228, *Conductors of insulated cables*

IEC 60269-1, *Low-voltage fuses – Part 1: General requirements*

IEC 60269-6, *Low-voltage fuses – Part 6: Supplementary requirements for fuse-links for the protection of solar photovoltaic energy systems*

AVA Documents
Document Sharing Hub

Full document details: BS IEC 62548-1:2023

IEC 60364-1, *Low-voltage electrical installations – Part 1: Fundamental principles, assessment of general characteristics, definitions*

IEC 60364-4 (all parts), *Low-voltage electrical installations – Part 4: Protection for safety*

IEC 60364-4-41:2005, *Low-voltage electrical installations – Part 4-41: Protection for safety – Protection against electric shock*
IEC 60364-4-41:2005/AMD1:2017

IEC 60364-4-44:2007, *Low-voltage electrical installations – Part 4-44: Protection for safety – Protection against voltage disturbances and electromagnetic disturbances*
IEC 60364-4-44:2007/AMD1:2015
IEC 60364-4-44:2007/AMD2:2018

IEC 60364-5 (all parts), *Electrical installations of buildings – Part 5: Selection and erection of electrical equipment*

IEC 60364-5-52, *Low-voltage electrical installations – Part 5-52: Selection and erection of electrical equipment – Wiring systems*

IEC 60364-5-54, *Low-voltage electrical installations – Part 5-54: Selection and erection of electrical equipment – Earthing arrangements and protective conductors*

IEC 60364-6, *Low-voltage electrical installations – Part 6: Verification*

IEC 60529, *Degrees of protection provided by enclosures (IP Code)*

IEC 60898-2, *Circuit-breakers for overcurrent protection for household and similar installations – Part 2: Circuit-breakers for AC and DC operation*

IEC 60898-3, *Circuit-breakers for overcurrent protection for household and similar installations – Part 3: Circuit-breakers for DC operation*

IEC 60947-1:2020, *Low-voltage switchgear and controlgear – Part 1: General rules*

IEC 60947-2, *Low-voltage switchgear and controlgear – Part 2: Circuit-breakers*

IEC 60947-3, *Low-voltage switchgear and controlgear – Part 3: Switches, disconnectors, switch-disconnectors and fuse-combination units*

IEC 61215 (all parts), *Terrestrial photovoltaic (PV) modules – Design qualification and type approval*

IEC 61439-1, *Low-voltage switchgear and controlgear assemblies – Part 1: General rules*

IEC 61439-2, *Low-voltage switchgear and controlgear assemblies – Part 2: Power switchgear and controlgear assemblies*

IEC 61643-21, *Low-voltage surge protective devices – Part 21: Surge protective devices connected to telecommunications and signalling networks – Performance requirements and testing methods*

IEC 61643-22, *Low-voltage surge protective devices – Part 22: Surge protective devices connected to telecommunications and signalling networks – Selection and application principles*

Documents
Document Sharing Hub

Full document details: BS IEC 62548-1:2023

IEC 61643-31:2018, *Low-voltage surge protective devices – Part 31: Requirements and test methods for SPDs for photovoltaic installations*

IEC 61701, *Photovoltaic (PV) modules – Salt mist corrosion testing*

IEC 61730-1, *Photovoltaic (PV) module safety qualification – Part 1: Requirements for construction*

IEC 61730-2, *Photovoltaic (PV) module safety qualification – Part 2: Requirements for testing*

IEC TS 61836:2016, *Solar photovoltaic energy systems – Terms, definitions and symbols*

IEC 61984, *Connectors – Safety Requirements and tests*

IEC 62109-1:2010, *Safety of power converters for use in photovoltaic power systems – Part 1: General requirements*

IEC 62109-2, *Safety of power converters for use in photovoltaic power systems – Part 2: Particular requirements for inverters*

IEC 62109-3, *Safety of power converters for use in photovoltaic power systems – Part 3: Particular requirements for electronic devices in combination with photovoltaic elements*

IEC 62305-2:2010, *Protection against lightning – Part 2: Risk management*

IEC 62305-3, *Protection against lightning – Part 3: Physical damage to structures and life* hazard

IEC 62440:2008, *Electric cables with a rated voltage not exceeding 450/750 V – Guide to use*

IEC 62446-1, *Photovoltaic (PV) systems – Requirements for testing, documentation and maintenance – Part 1: Grid connected systems – Documentation, commissioning tests and inspection*

IEC 62446-2, *Photovoltaic (PV) systems – Requirements for testing, documentation and maintenance – Part 2: Grid connected systems – Maintenance of PV systems*

IEC 62716, *Photovoltaic (PV) modules – Ammonia corrosion testing*

IEC TS 62738, *Ground-mounted photovoltaic power plants – Design guidelines and recommendations*

IEC TS 62804-1, *Photovoltaic (PV) modules – Test methods for the detection of potential-induced degradation – Part 1: Crystalline silicon*

IEC 62817, *Photovoltaic systems – Design qualification of solar trackers*

IEC 62852, *Connectors for DC-application in photovoltaic systems – Safety requirements and tests*

IEC 62930:2017, *Electric cables for photovoltaic systems with a voltage rating of 1,5 kV DC*

IEC 62938, *Photovoltaic (PV) modules – Non-uniform snow load testing*

Documents
Document Sharing Hub

Full document details: BS IEC 62548-1:2023

IEC 62941, *Terrestrial photovoltaic (PV) modules – Quality system for PV module manufacturing*

IEC 63027, *Photovoltaic power systems – DC arc detection and interruption*

IEC 63104, *Solar trackers – Safety requirements*

IEC 63112:2021, *Photovoltaic (PV) arrays – Earth fault protection equipment – Safety and safety-related functionality*

IEC TS 63126:2020, *Guideline for qualifying PV modules, components and materials for operation at high temperatures*

IEC TS 63209-1, *Photovoltaic modules – Extended-stress testing – Part 1: Modules*

IEC TR 63226:2021, *Managing risk related to photovoltaic (PV) systems on buildings*

IEC TR 63227, *Lightning and surge voltage protection for photovoltaic (PV) power supply systems*

3 Terms, definitions, symbols and abbreviated terms

3.1 Terms and definitions

For the purposes of this document, the terms and definitions in IEC TS 61836 and the following apply.

ISO and IEC maintain terminological databases for use in standardization at the following addresses:

- IEC Electropedia: available at https://www.electropedia.org/
- ISO Online browsing platform: available at https://www.iso.org/obp

3.1.1
blocking diode
diode connected in series with module(s), panel(s), sub-arrays and array(s) to block reverse current into such module(s), panel(s), sub-array(s) and array(s)

3.1.2
bifacial nameplate irradiance
BNPI
higher irradiance at which nameplate verification is performed for bifacial modules. Bifacial nameplate irradiance (BNPI) is that which corresponds to 1 000 W/m^2 on the module front, and 135 W/m^2 on the module rear

Note 1 to entry: BNPI may be applied in any method allowed by IEC TS 60904-1-2.

[SOURCE: IEC 61215-1:2021, 3.11]

3.1.3
bonding conductor
conductor provided for functional or protective equipotential bonding

Documents
Document Sharing Hub

Full document details: BS IEC 62548-1:2023

3.1.4
bypass diode
diode connected across one or more cells in the forward current direction to allow the module current to bypass shaded or broken cells to prevent hot spot or hot cell damage resulting from the reverse voltage biasing from the other cells in that module

3.1.5
charge controller
power conversion equipment used between a battery and a PV array to regulate charge delivered to the battery

3.1.6
DC conditioning units
DCU
DC to DC power conversion equipment connected to individual PV modules or groups of PV modules or PV strings to modify the voltage and or current of the PV output

3.1.7
decisive voltage class
DVC
classification of voltage range used to determine the protective means against electric shock and the requirements of protection between circuits

Note 1 to entry: See decisive voltage class limits in Clause E.1.

[SOURCE: IEC 62477-1:2022,3.15]

3.1.8
disconnector
mechanical switching device which provides, in the open position, an isolating distance in accordance with specified requirements

Note 1 to entry: A disconnector is capable of opening and closing a circuit when either negligible current is broken or made, or when no significant change in the voltage across the terminals of each of the poles of the disconnector occurs. It is also capable of carrying currents under normal circuit conditions and carrying currents for a specified time under abnormal conditions such as those of short circuit.

[SOURCE: IEC 60050-441:1984, 441-14-05]

3.1.9
double insulation
insulation comprising both basic insulation and supplementary insulation

[SOURCE: IEC 60050-195:2021, 195-06-08]

3.1.10
earth fault
ground fault (US)
occurrence of an accidental conductive path between a live part and the Earth

Note 1 to entry: The conductive path can consist of faulty insulation, structures (e.g. poles, scaffoldings, cranes, ladders), or vegetation (e.g. trees, bushes) and can have a significant impedance.

[SOURCE: IEC 60050-195:2021, 195-04-14]

Documents
Document Sharing Hub
Full document details: BS IEC 62548-1:2023

3.1.11
extraneous conductive part
conductive part not forming part of the electrical installation and liable to introduce an electric potential, generally the electric potential of a local earth

[SOURCE: IEC 60050-851:2008, 851-14-57, modified – The note has been deleted.]

3.1.12
extreme annual mean minimum dry bulb temperature
average of at least 5 years of the lowest yearly measured dry bulb temperatures at a location

3.1.13
independent manual operation
independent manual operation of a mechanical switching device
stored energy operation where the energy originates from manual power, stored and released in one continuous operation (e.g. spring release), such that the speed and force of the operation are independent of the action of the operator

Note 1 to entry: See Annex F for calculation of K_I.

[SOURCE: IEC 60050-441:1984, 441-16-16, modified – The brackets have been added to the definition.]

3.1.14
live part
conductive part intended to be energized under normal operating conditions, including the neutral conductor and mid-point conductor, but excluding the PEN conductor, PEM conductor and PEL conductor

Note 1 to entry: This concept does not necessarily imply a risk of electric shock.

[SOURCE: IEC 60050-195:2021, 195-02-19]

3.1.15
low voltage
voltage exceeding DVC A, but not exceeding 1 000 V AC or 1 500 V DC

3.1.16
maximum power point tracking
MPPT
control strategy whereby PV array operation is always at or near the point on a PV device's current-voltage characteristic where the product of electric current and voltage yields the maximum electrical power under specified operating conditions

3.1.17
non-separated PCE
PCE without at least simple separation between the input and output circuits

3.1.18
partial DCU strings
PV string where some but not all PV modules have DCUs fitted

Note 1 to entry: These configurations are sometimes used where some, but not all, modules are subject to shading on a regular basis.

3.1.19
DCU strings
string of DCUs connected in series on the output side of the DCUs where all PV modules or groups of PV modules have DCUs fitted

AVA Documents
Document Sharing Hub

Full document details: BS IEC 62548-1:2023

3.1.20
power conversion equipment
PCE
electrical device converting one kind of electrical power from a voltage or current source into another kind of electrical power with respect to voltage, current and frequency

Note 1 to entry: Examples include AC-DC converters, DC-AC inverters, DC-DC converters, DC-DC charge controllers, frequency converters, etc. DCUs are a subset of PCEs.

Note 2 to entry: See Figure 2 to Figure 4.

3.1.21
prospective short-circuit current
RMS value of the available current which would flow from a source connected to a port of the PCE, if the supply conductors from the source are short-circuited by a conductor of negligible impedance located as near as practicable to the supply terminals of the PCE

Note 1 to entry: In general, the prospective short circuit current is represented by the symbol I_{CP}. In the particular case of a PV port, this document uses $I_{CP\ PV}$. See 3.2.11.

[SOURCE: IEC 62477-1:2022,3.58, modified – The symbol has been removed and an explanation has been added in the note to entry, added the word “available” before “current”. Added “from a source connected to a port of the PCE” after “flow”. Replaced “to the circuit” with “from the source” and replaced “PECS” with “PCE”.]

3.1.22
PV array
assembly of electrically interconnected PV modules, PV strings or PV sub-arrays and support structure, including DCU strings and partial DCU strings up to:

- the input of the final power conversion equipment (PCE) which supplies loads or an AC or DC distribution network
- DC loads or DC distribution system

Note 1 to entry: For the purposes of this document a PV array is all components up to the DC input terminals of a final PCE or DC loads. A PV array does not include its foundation, tracking apparatus, thermal control, and other such components.

Note 2 to entry: A PV array may consist of a single PV module, a single PV string, or several parallel-connected strings, or several parallel-connected PV sub-arrays and their associated electrical components, including DC-DC converters up to the terminals of the final power conversion equipment (see Figure 2 to Figure 11).

3.1.23
PV array main cable
output cable of a PV array that carries the total output current of the array

3.1.24
PV array combiner box
enclosure where PV sub-arrays are connected and which may also contain overcurrent protection and/or isolation means

Note 1 to entry: Small arrays generally do not contain sub-arrays but are simply made up of strings, whereas large arrays are generally made up of multiple sub-arrays.

3.1.25
PV module
complete and environmentally protected assembly of interconnected photovoltaic cells

[SOURCE: IEC TS 61836:2016, 3.1.48.7, modified – The adjective "photovoltaic" has been replaced by "PV" in the term.]

Documents
Document Sharing Hub
Full document details: BS IEC 62548-1:2023

3.1.26
PV power generation plant
type of ground mounted PV installation, which is operated under supervision with restricted access solely for the purpose of providing electrical energy to the distribution system

Note 1 to entry: "Under supervision" means that PV power plants are restricted from access by non-qualified personnel and are continuously monitored for safety and protection, either by on-site personnel or by active remote monitoring. In some documents such as IEC 62109, this type of area is refered to as a “closed electrical operating area”.

Note 2 to entry: PV systems on buildings do not fall under the definition of PV power generation plants

3.1.27
PV reverse current
current supplied by parallel PV strings or sub-arrays into a fault on a string or sub-array and does not include backfeed current

3.1.28
PV string
circuit of one or more series-connected modules

[SOURCE: IEC TS 61836:2016, 3.3.59.6, modified – The adjective "photovoltaic" has been replaced by "PV", and the words "one or more" have been added for clarity.]

3.1.29
PV string cable
cable interconnecting the modules in a PV string, or connecting strings to a combiner box, PCE or other DC loads

Note 1 to entry: See Figure 2 to Figure 4.

3.1.30
PV string combiner box
enclosure where PV strings are connected which may also contain overcurrent protection devices and/or isolation means

Note 1 to entry: See Figure 4.

Note 2 to entry: PV string combiner boxes are only relevant for PV arrays that are divided into sub-arrays.

3.1.31
PV sub-array
electrical subset of a PV array formed of parallel connected PV strings

3.1.32
PV sub-array cable
output cable of a PV sub-array that carries the output current of its associated sub-array

Note 1 to entry: PV sub-array cables are only relevant for PV arrays that are divided into sub-arrays (see Figure 4).

3.1.33
reinforced insulation
insulation which provides a degree of protection against electric shock equivalent to double insulation

Note 1 to entry: Reinforced insulation may comprise several layers which cannot be tested singly as basic insulation or supplementary insulation.

[SOURCE: IEC 60050-195:2021,195-06-09]

Documents
Document Sharing Hub

Full document details: BS IEC 62548-1:2023

3.1.34
shield
<of a cable> surrounding earthed metallic layer to confine the electric field within the cable and/or to protect the cable from external electrical influence

Note 1 to entry: Metallic sheaths, armour and earthed concentric conductors may also serve as shields.

[SOURCE: IEC 60050-461:2008, 461-03-04, modified – The words "foils, braids" have been deleted from the note, as well as the second note.]

3.1.35
separation
prevention of electrical conduction between two circuits or between a circuit and a conductive metal part

Note 1 to entry: Separation in the context of this document means galvanic isolation.

Note 2 to entry: Separation may be achieved to different degrees, e.g. simple separation, protective separation.

3.1.36
simultaneously accessible parts
conductive parts that can be touched simultaneously by a human being or by livestock

Note 1 to entry: Simultaneously accessible parts may be: live parts, exposed conductive parts, extraneous conductive parts, protective conductors or earth electrodes.

[SOURCE: IEC 60050-826:2022, 826-12-12, modified – In the note, the words "soil or conductive floor" have been replaced by "earth electrodes".]

3.1.37
standard test conditions
STC
reference values of in-plane irradiance ($G_{I,ref}$ = 1 000 W·m^{-2}), PV cell junction temperature (25 °C), and air mass (AM = 1,5) to be used during the testing of any PV device

[SOURCE: IEC TS 61836:2016, 3.4.16.5]

3.1.38
switch-disconnector
mechanical switching device capable of making, carrying and breaking currents in normal circuit conditions and, when specified, in given operating overload conditions, and able to carry, for a specified time, currents under specified abnormal circuit conditions, such as short-circuit conditions and in the open position, satisfies the isolating requirements specified for a disconnector

Note 1 to entry: A switch-disconnector complies with the requirements for a disconnector.

Note 2 to entry: Switch-disconnectors provide a load break isolation function. In this document these switches will be identified on warning signs and labels as "isolators" for simplicity in interpretation by the public.

Documents
Document Sharing Hub
Full document details: BS IEC 62548-1:2023

3.1.39
system (functionally-earthed)
system where the PV array has one conductor intentionally connected to earth for purposes other than electrical safety, by means not complying with the requirements for protective bonding

Note 1 to entry: Examples of functional array earthing include earthing one conductor through an impedance, relay, or overcurrent protective device, or systems in which the array is not permanently earthed (opening the earth connection periodically or under fault conditions). Examples shown in Figure B.1.

Note 2 to entry: Use of a resistive network connected between the array and earth to measure the array insulation resistance (impedance monitoring) does not create a functionally-earthed array, as the impedance of such measurement networks is normally very high.

3.1.40
system (non-earth-referenced)
system where the PV array has none of its conductors intentionally referenced to earth either directly or through the power conversion equipment (PCE)

Note 1 to entry: Examples shown in Figure B.2.

3.1.41
system (non-separated)
system where the PV array is connected to an intentionally earth-referenced system through a non-separated PCE

Note 1 to entry: Typically this refers to a system with a non-separated inverter, connecting to an earth-referenced AC system, so that when the inverter's connection relay (or other switching device) is closed, the entire system including the PV array is earth-referenced.

Note 2 to entry: Examples shown in Figure B.3.

3.2 Symbols

3.2.1
$I_{\mathrm{BF\ TOTAL}}$
total continuous backfeed current from all sources other than the PV array itself

Note 1 to entry: This typically includes backfeed from the PCE and any energy storage system that is directly connected to a PV array.

Note 2 to entry: The current that can flow from parallel PV sub-arrays or strings into a faulty sub-array or string is referred to as "PV reverse current" to differentiate it from PCE backfeed current.

Note 3 to entry: In IEC 62109-1:2010 (Ed 1) the backfeed current from the PCE includes reverse currents from all other connected PV inputs. It is planned to change this in Edition 2 of IEC 62109-1."

3.2.2
irradiance
G
electromagnetic radiated solar power per unit of area

Note 1 to entry: Expressed in W/m^2.

[SOURCE: IEC TS 61836:2016, 3.6.25, modified – The adjective "solar" has been added to the definition, and the note has been replaced.]

3.2.3
rated short circuit making capacity
I_{cm}
short-circuit making capacity of the equipment at the rated operational voltage

Note 1 to entry: Definition derived from IEC 60947-1:2020.

Documents
Document Sharing Hub
Full document details: BS IEC 62548-1:2023

3.2.4
rated short circuit breaking capacity
I_{cn}
short-circuit breaking capacity of the equipment at the rated operational voltage

Note 1 to entry: Definition derived from IEC 60947-1:2020.

3.2.5
rated operational current
I_e
rated operational current of an equipment stated by the manufacturer and taking into account the rated operational voltage the rated frequency the rated duty, the utilization category and the type of protective enclosure, if appropriate

Note 1 to entry: Definition derived from IEC 60947-1:2020.

3.2.6
conventional enclosed thermal current
I_{the}
value of current stated by the manufacturer used for temperature-rise tests of an equipment when mounted in a specified enclosure

Note 1 to entry: Definition derived from IEC 60947-1:2020.

3.2.7
$I_{MOD_MAX_OCPR}$
PV module maximum overcurrent protection rating determined by IEC 61730-2

Note 1 to entry: This is often specified by module manufacturers as the maximum series fuse rating which refers to the fuse rated current in IEC 60269-1 and IEC 60269-6.

3.2.8
I_n
rated current

3.2.9
$I_{SC\ MOD}$
short circuit current of a monofacial PV module or PV string at standard test conditions (STC), as specified by the manufacturer on the product name-plate

Note 1 to entry: For the purposes of this document the short circuit current of a string is taken as equal to $I_{SC\ MOD}$.

3.2.10
$I_{SC\ BNPI}$
short circuit current of a bifacial PV module or PV string at BNPI test conditions,(see 3.1.2) as specified by the manufacturer in the product specification plate

Documents
Document Sharing Hub
Full document details: BS IEC 62548-1:2023

3.2.11
$I_{CP\ PV}$
PCE maximum rated prospective short circuit current at the PV input terminals; i.e. the absolute maximum current the PV input to the PCE is designed to withstand or carry under normal and fault conditions, for that input

Note 1 to entry: At the system design level, this rating would typically be coordinated with the total I_{SC} of the connected PV strings, adjusted for temperature, excess irradiance, etc. as required by installation standards (i.e. not simply the sum of the marked I_{SC} ratings of the connected PV modules, since those markings are based on short-circuit conditions under standard test conditions (STC), and may be exceeded in actual use).

Note 2 to entry: $I_{CP\ PV}$ is used in this document and replaces the previous $I_{SC\ PV}$. The committee is attempting to create a consistent definition across a range of standards. IEC 62109-1:2010, Ed1 uses the symbol $I_{SC\ PV,}$ but is being revised in Ed2 under development to use $I_{CP\ PV}$. The current version of the data sheet standard IEC 62894 uses the term $I_{SC\ MAX}$. but is under revision.

3.2.12
K_I
DC current rating adjustment factor dependent on site PV module type and installation properties such as module orientation, module shading or module rear side irradiance

3.2.13
N_S
total number of parallel-connected PV strings in the PV array

3.2.14
N_{SA}
number of parallel-connected PV strings in the PV sub-array

3.2.15
I_{DCU_OCPR}
DCU maximum overcurrent protection on the DCU string output side

Note 1 to entry: This may be given as a fuse rating.

3.2.16
I_{DCU_max}
DCU maximum output current

3.2.17
$I_{F\ STRING}$
fault current that may flow in a string due to other parallel connected strings in the array

3.2.18
$I_{F\ S\text{-}ARRAY}$
fault current that may flow in a sub-array cable due to parallel connected strings in the array

3.2.19
$I_{F\ ARRAY}$
fault current that may flow in an array cable due to parallel connected strings in the array

3.2.20
U_{DCU_max}
DCU maximum output voltage

Documents
Document Sharing Hub
Full document details: BS IEC 62548-1:2023

3.2.21
open-circuit maximum voltage
$U_{\text{OC MAX}}$
maximum voltage across an unloaded (open) PV-module -string, DCU string, partial DCU string or PV array, or on the DC side of the PV PCE

Note 1 to entry: The method for determining $U_{\text{OC MAX}}$ is given in Annex F.

3.2.22
R_{iso}
insulation resistance (isolation) between the PV array and earth

3.2.23
$U_{\text{BUS-MAX}}$
maximum voltage output of a group of DCUs

Note 1 to entry: See Annex J for test requirements.

3.2.24
$U_{\text{OC ARRAY}}$
open circuit voltage at standard test conditions of a PV array, and is equal to:

$$U_{\text{OC ARRAY}} = U_{\text{OC MOD}} \times M$$

where

M is the number of series-connected PV modules in any PV string of the PV array

Note 1 to entry: This document assumes that all strings within a PV array are connected in parallel; hence the open circuit voltage of PV sub-arrays and PV strings is equal to $U_{\text{OC ARRAY}}$.

3.2.25
$U_{\text{OC MOD}}$
open circuit voltage of a PV module at standard test conditions, as specified by the manufacturer in the product specification

3.3 Abbreviated terms

3.3.1
PV-EFP
photovoltaic earth fault protection

3.3.2
PV-EFPE
photovoltaic earth fault protection equipment

4 Compliance with IEC 60364 series

The design, erection and verification of the PV system shall comply with the requirements of:

- IEC 60364-1,
- IEC 60364-4 (all parts),
- IEC 60364-5 (all parts), and
- IEC 60364-6.

Documents
Document Sharing Hub
Full document details: BS IEC 62548-1:2023

5 PV array system configuration

5.1 General

5.1.1 Functional configuration of a PV system

PV arrays are used to supply power to an application circuit.

Figure 1 illustrates the general functional configuration of a PV powered system.

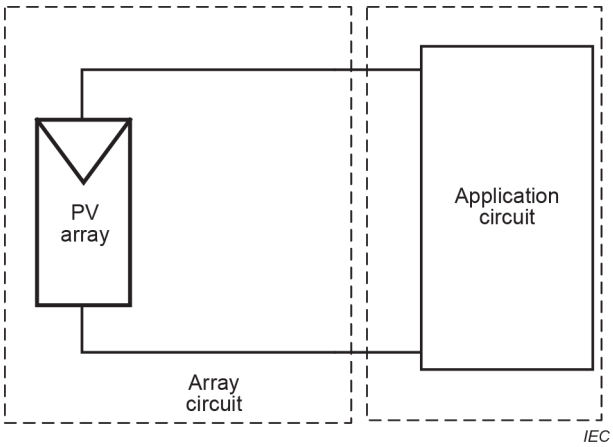

Figure 1 – General functional configuration of a PV powered system

Three kinds of application circuits are considered:

- PV array is connected to DC loads;
- PV array is connected to a system via PCE which includes at least simple separation;
- PV array is connected to a system via PCE which does not include simple separation.

5.1.2 PV system topologies

The relation of a PV array to earth is determined by whether any earthing of the array for functional reasons is in use, the impedance of that connection and also by the earth status of the application circuit (e.g. inverter or other equipment) to which it is connected. These aspects and the location of an earth connection all affect safety of a PV array (refer to Annex B for examples of earthed and unearthed configurations).

The requirements of manufacturers of PV modules and manufacturers of PCE to which the PV array is connected shall be considered in determining the most appropriate system earthing arrangement.

The system may be separated or non-separated between the PV array and the application circuit. If separated, the separation may be either integral to the PCE or provided externally by a transformer or other PCE with at least simple separation.

Protective earthing of any of the line or midpoint conductors of the PV array is not permitted.

Functional earthing of one of the line or midpoint conductors of the PV array is permitted where there is at least simple separation between PV array DC power circuits and the AC mains or other earthed power system. The separation may be provided either internally in the PCE or externally via a separate transformer.

Documents
Document Sharing Hub
Full document details: BS IEC 62548-1:2023

Temporary functional earthing is allowed for anti-PID purposes as shown in Annex H. Where a non separated PCE is in use the temporary functional earth connection may be applied only after the PCE is disconnected from the AC mains or other earthed power system.

Where the PCE functionally earths the PV array and provides separation using an external transformer:

- all conductors and equipment located on the AC link between the PCE and the external transformer shall be rated for the common-mode voltage to earth specified by the PCE manufacturer, or shall be separated by a transformer or other equipment such that the common-mode voltage is not present;
- the transformer(s) used shall be rated for the common-mode voltage.

NOTE 1 In a system where the PCE is separated using an external transformer, the AC link between the inverter AC output and the transformer is often unearthed to allow flexibility regarding functional earthing of the PV array. If the PV array is functionally earthed in the PCE, some inverter topologies will impose a high common-mode voltage to earth on the unearthed AC link circuit.

Where the PCE provides separation using an external transformer and more than one PCE is connected in parallel to a common winding, the PCEs shall be specifically rated for parallel connection with each other.

NOTE 2 Parallel connection of PCEs may cause circulating currents through earth if the PCEs are not designed to mitigate such currents.

5.1.3 Array electrical diagrams

The diagrams in Figure 2 to Figure 4 show examples of the basic electrical configurations of single string, multiple parallel string and multi-sub-array PV arrays respectively.

Documents
Document Sharing Hub

Full document details: BS IEC 62548-1:2023

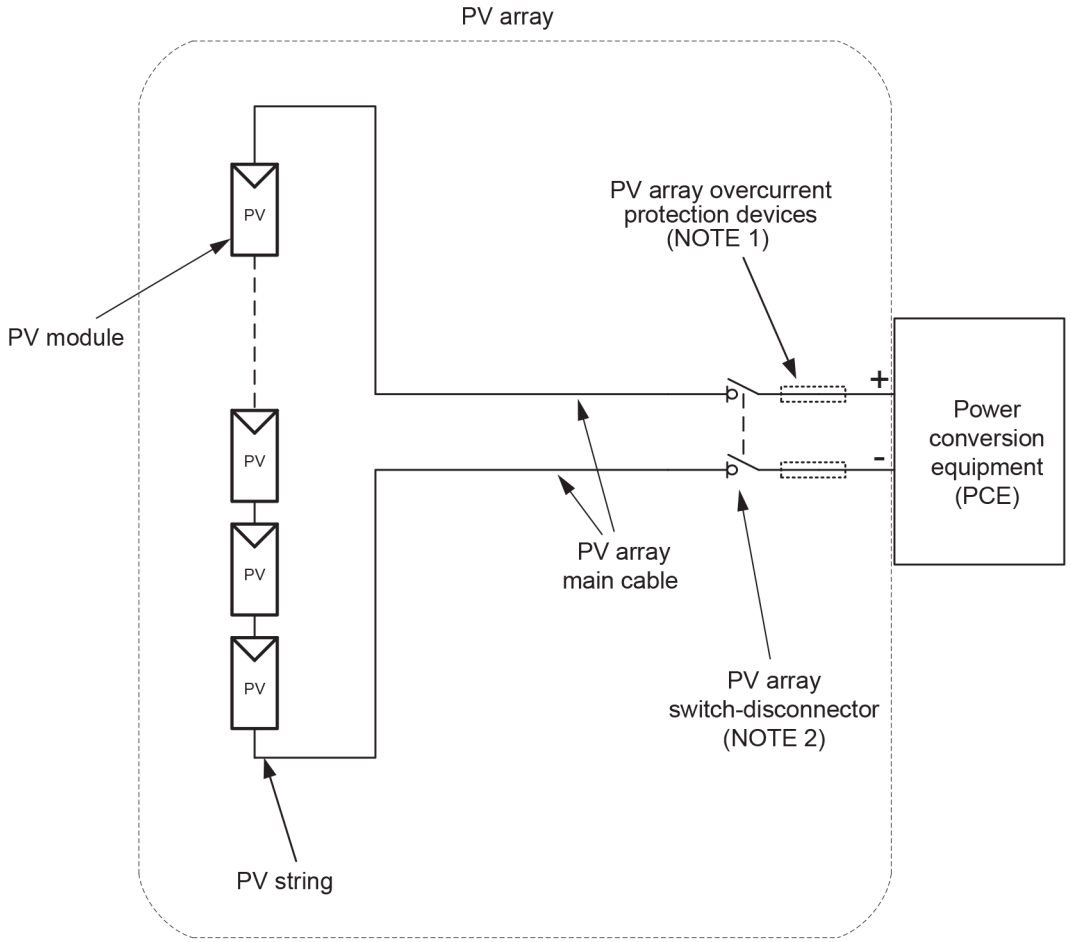

Key

---------- Elements that are not required in all cases

– – – Boundary of system or sub-system

IEC

NOTE 1 Overcurrent protection devices where required (see 6.5).

NOTE 2 See 7.2.6 and 7.3.1 for PV array isolator/ isolation means with breaking capabilities requirements.

NOTE 3 Overcurrent protection devices and isolation means with breaking capabilities may be located inside the PCE under certain conditions (see 7.3.1.2).

NOTE 4 In this example there is only one string so the string cable is also the PV array main cable.

Figure 2 – PV array diagram – single string example

Documents
Document Sharing Hub
Full document details: BS IEC 62548-1:2023

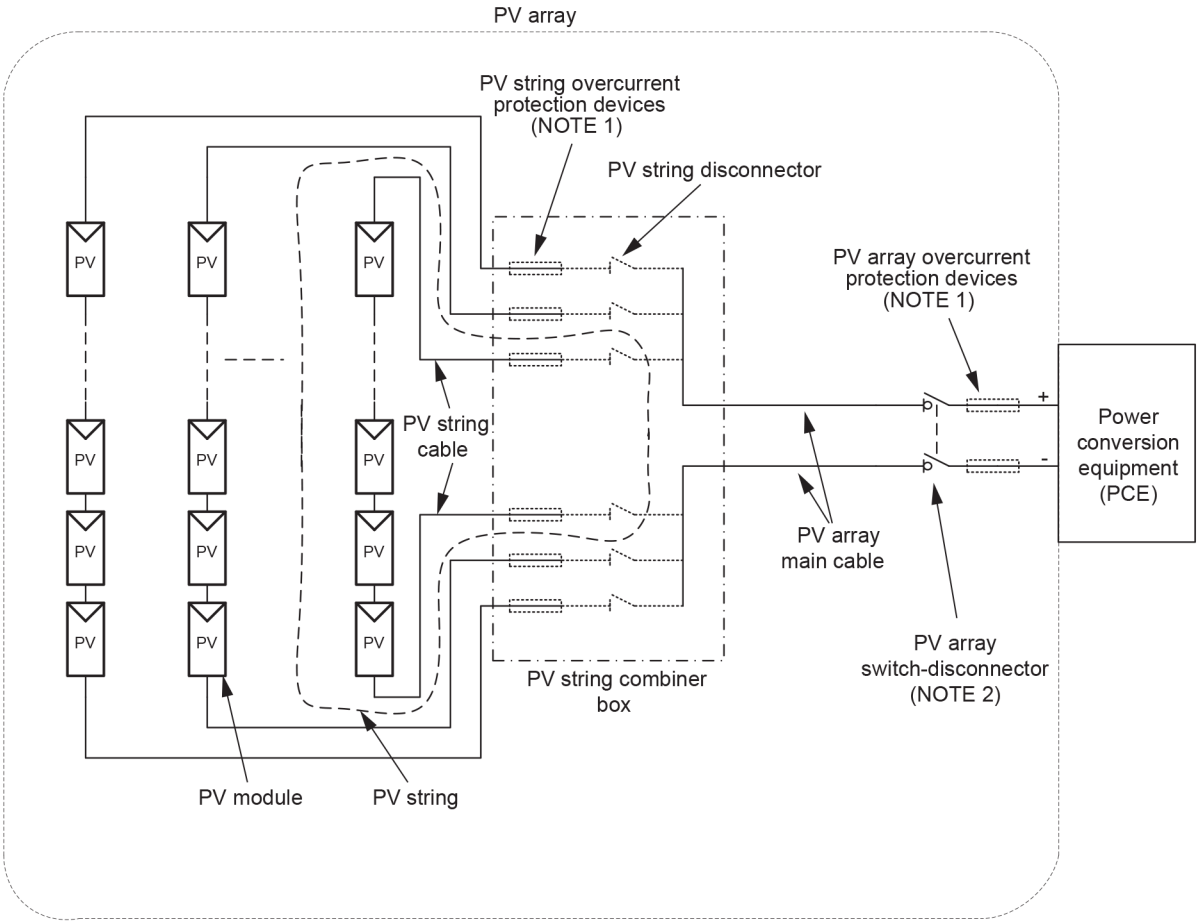

Key

Elements that are not required in all cases

Enclosure

Boundary of system or sub-system

IEC

NOTE 1 Overcurrent protection devices where required (see 6.5).

NOTE 2 See 7.2.6 and 7.3.1 for PV array isolator/ isolation means with breaking capabilities requirements.

NOTE 3 In some systems, the PV array main cable may not exist and all the PV strings or PV sub-arrays may be terminated in a combiner box immediately adjacent to or inside the PCE.

Figure 3 – PV array diagram – multiple parallel string example

Documents
Document Sharing Hub
Full document details: BS IEC 62548-1:2023

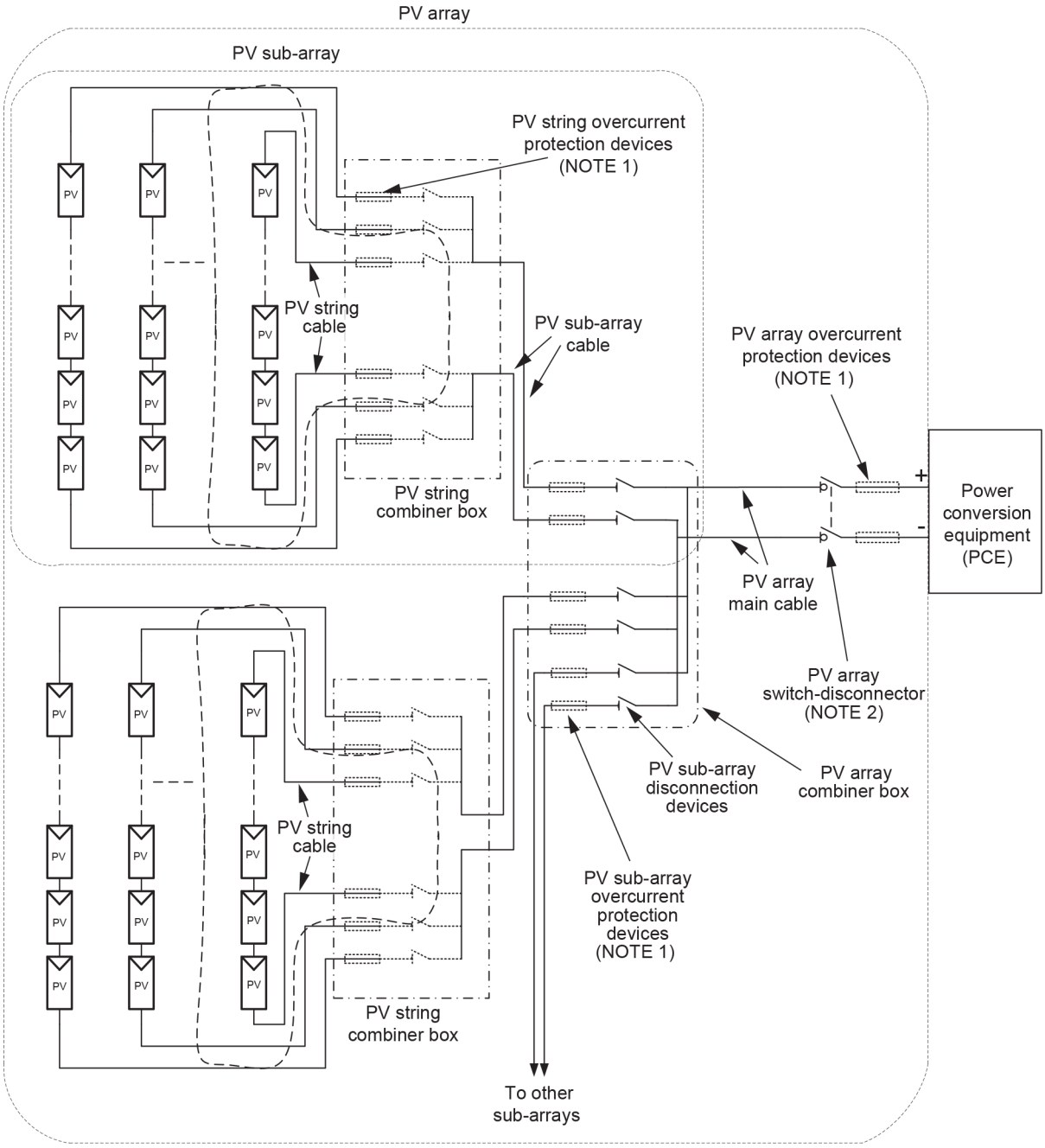

Key

Elements that are not required in all cases

Enclosure

Boundary of system or sub-system

IEC

NOTE 1 Overcurrent protection devices where required (see 6.5).

NOTE 2 See 7.2.6 and 7.3.1 for PV array isolator/ isolation means with breaking capabilities requirements.

NOTE 3 In some systems, the PV array main cable may not exist and all the PV strings or PV sub-arrays may be terminated in a combiner box immediately adjacent to or inside the PCE.

Figure 4 – PV array diagram – multiple parallel string example with array divided into sub-arrays

Documents
Document Sharing Hub
Full document details: BS IEC 62548-1:2023

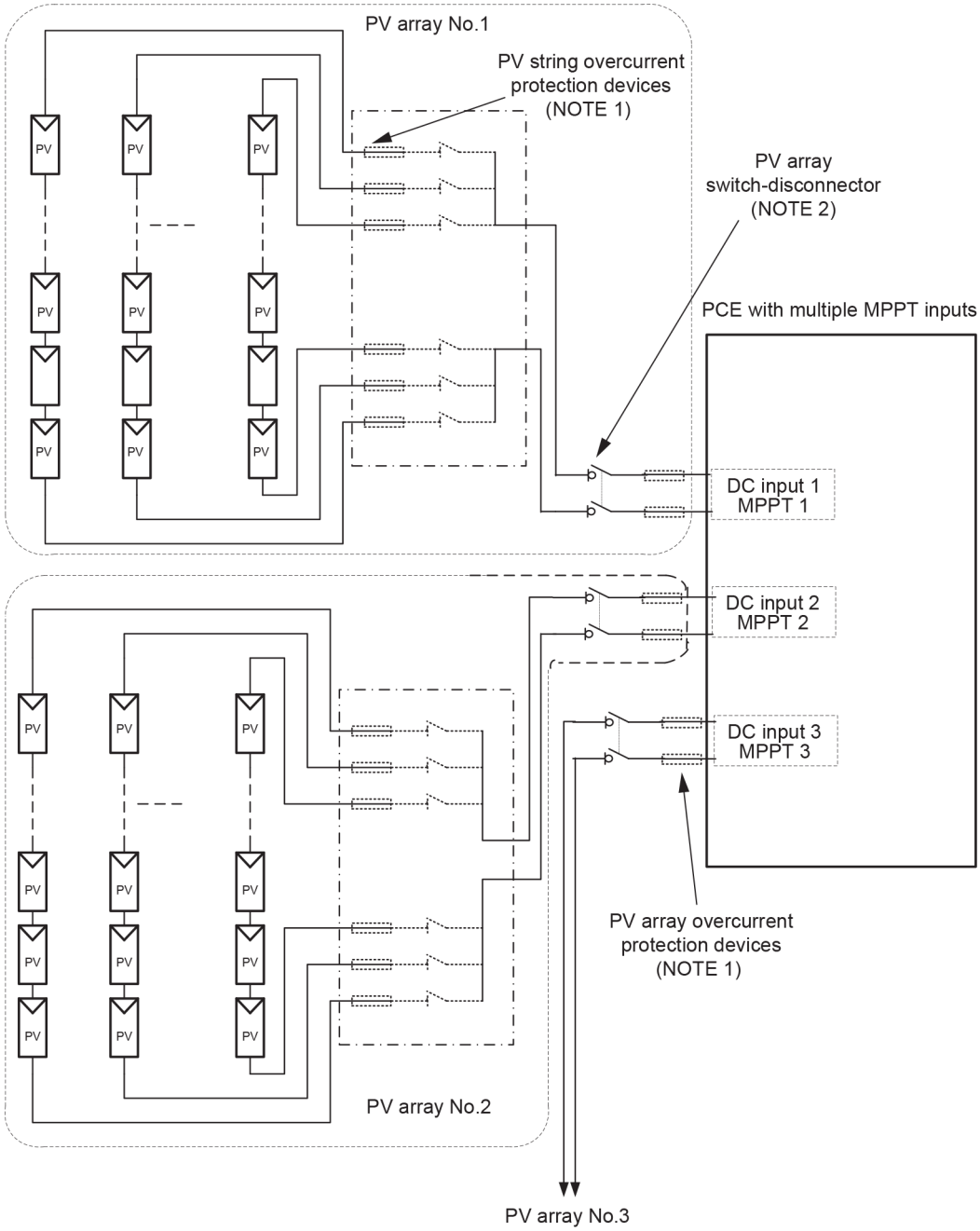

Key

Elements that are not required in all cases

Enclosure

Boundary of system or sub-system

IEC

NOTE 1 Overcurrent protection devices where required (see 6.5).

NOTE 2 See 7.2.6 and 7.3.1 for PV array isolator/ isolation means with breaking capabilities requirements.

Figure 5 – PV array example using a PCE with multiple MPPT DC inputs

Documents
Document Sharing Hub
Full document details: BS IEC 62548-1:2023

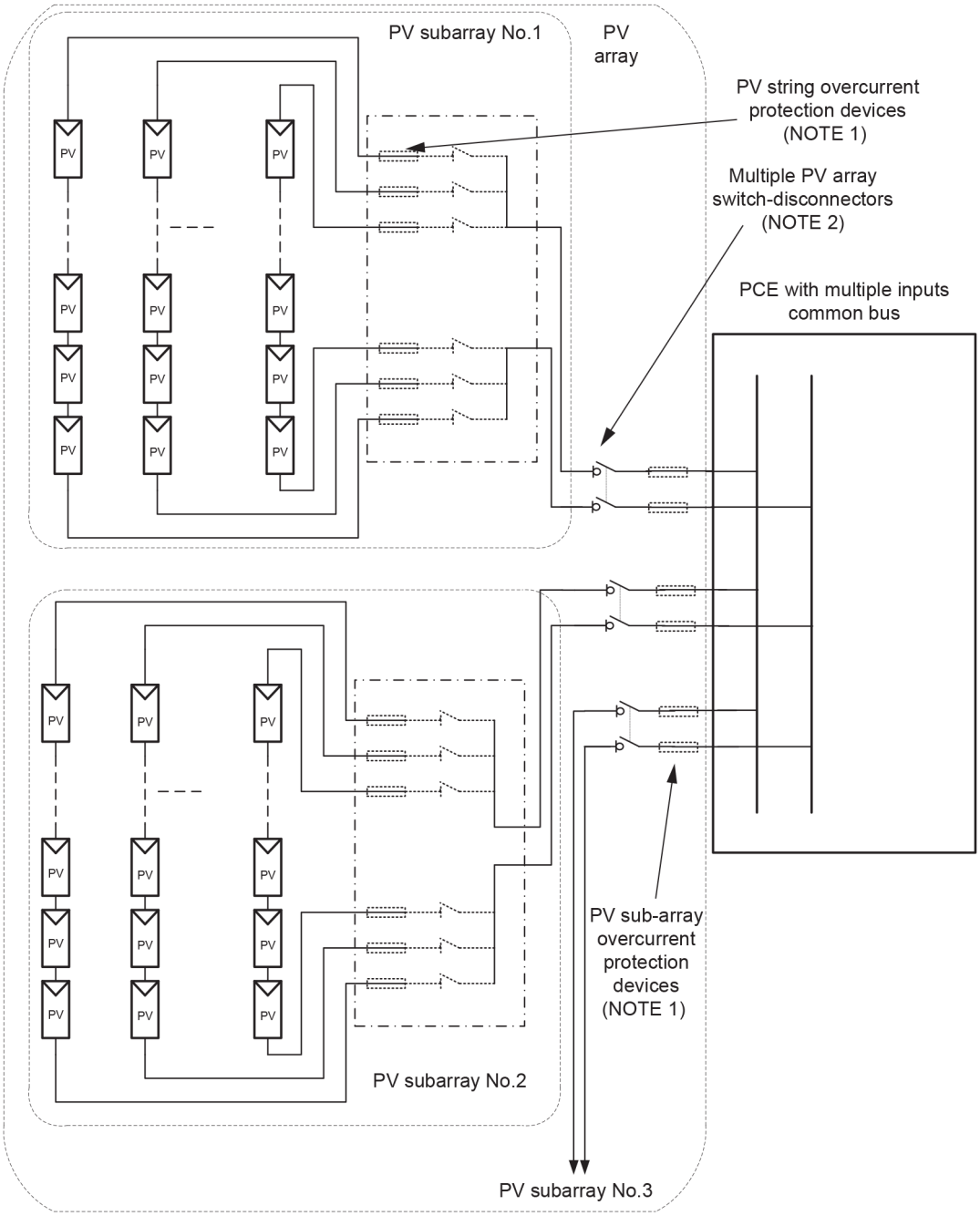

Key

-------- Elements that are not required in all cases

– · – Enclosure

– – Boundary of system or sub-system

IEC

NOTE 1 Overcurrent protection devices where required (see 6.5).

NOTE 2 See 7.2.6 and 7.3.1 for PV array isolator/ isolation means with breaking capabilities requirements.

Figure 6 – PV array example using a PCE with multiple DC inputs internally connected to a common DC bus

Documents
Document Sharing Hub
Full document details: BS IEC 62548-1:2023

5.1.4 Use of PCE with multiple DC inputs

5.1.4.1 General

PV arrays are often connected to PCEs with multiple DC inputs. If multiple DC inputs are in use, overcurrent protection and cable sizing within the various sections of the PV array(s) are critically dependent on the limiting of any possible backfeed and/or PV reverse currents. Backfeed currents may be provided by other energy sources (i.e. other than PV) connected to the PCE. Reverse currents may be provided from parallel PV strings or sub-arrays. Both backfeed and PV reverse currents, may feed into a faulty section of the array. (See to Figure 5 and Figure 6).

5.1.4.2 PCEs with DC-DC converters on the PV inputs

In the case of PCEs which have multiple PV inputs, where each input is provided with a DC-DC converter (for MPPT or other purposes), and the DC-DC converter is specified by the manufacturer as preventing PV reverse current, the PV section connected to each input (see Figure 5) may be treated for the purposes of this document as a separate PV array.

NOTE 1 The above applies whether the DC-DC converters have internal separation or not provided the PCE manufacturer specifies the ability to block PV reverse current.

NOTE 2 IEC 62109-1 Ed. 2 in preparation includes requirements for qualifying and documenting the ability of DC-DC converters to block PV reverse current.

The overcurrent protection and cable sizing of the array connected to each of those inputs shall take into account any backfeed current from the PCE as required to be specified by the IEC 62109 series.

Each PV array shall have an isolation means with load breaking capabilities to provide isolation of the PCE. The provisions of multiple isolation device with breaking capabilities in 7.3.1 apply, and a warning sign as required in 10.5.2 shall be provided.

5.1.4.3 PCEs with multiple inputs internally connected together in the PCE

Where a PCE's multiple input circuits are internally paralleled onto a common DC bus, without DC-DC converters, each PV section connected to one of those inputs (refer to Figure 6) shall be considered for the purposes of this document as sub-arrays, and all the PV sections combined shall be classified as the complete PV array.

The overcurrent protection and cable sizing of each sub-array shall take into account any backfeed current from the PCE as required to be specified by the IEC 62109 series, and reverse current from the parallel sub-arrays and strings.

Each PV sub-array shall have an isolation means with load breaking capabilities to provide isolation of the PCE. The provisions of multiple isolation device with breaking capabilities in 7.3.1 apply, and a warning sign as required in 10.5.2 shall be provided.

5.1.5 PV arrays using DCUs

DCUs may be connected to individual PV modules, small groups of PV modules or whole PV strings to allow DC conditioning of the PV output. Figure 7 to Figure 10 show examples of some configurations in use. In some circumstances only some of the PV modules in a string may have DCUs connected (partial DCU string) to provide for modules that have shading on a regular basis. An example is shown in Figure 8.

DCUs shall be qualified to the relevant parts of IEC 62109 series.

The deployment of DCUs has implications for the voltage and current ratings within the PV-array. Refer to Clauses F.1, and F.2.

AVA Documents
Document Sharing Hub

Full document details: BS IEC 62548-1:2023

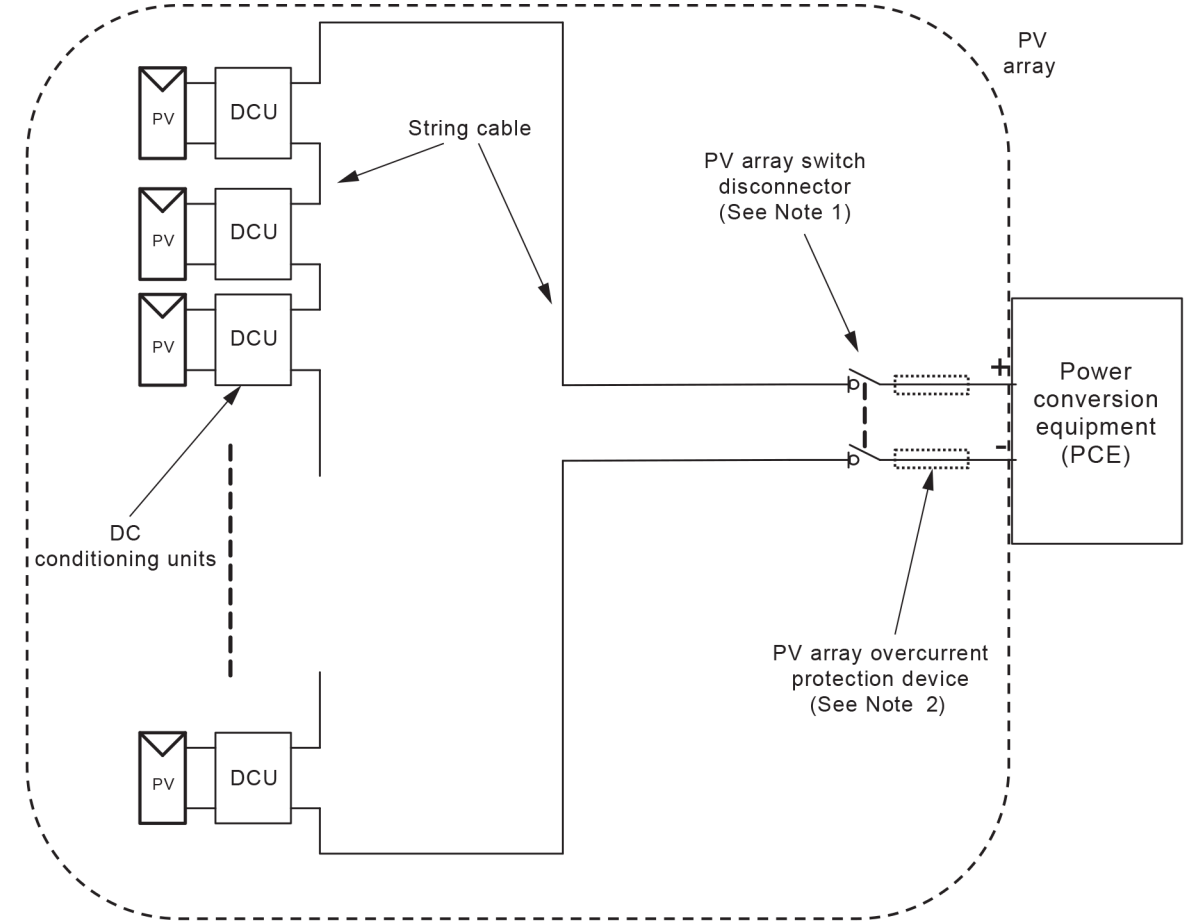

NOTE 1 See 7.2.6 and 7.3.1 for PV array isolation device with breaking capabilities requirements.

NOTE 2 Overcurrent protection devices where required (see 6.5).

NOTE 3 The individual PV modules in this diagram may be replaced by multiple PV modules in series or parallel.

Figure 7 – PV string constructed using DCUs

Documents
Document Sharing Hub
Full document details: BS IEC 62548-1:2023

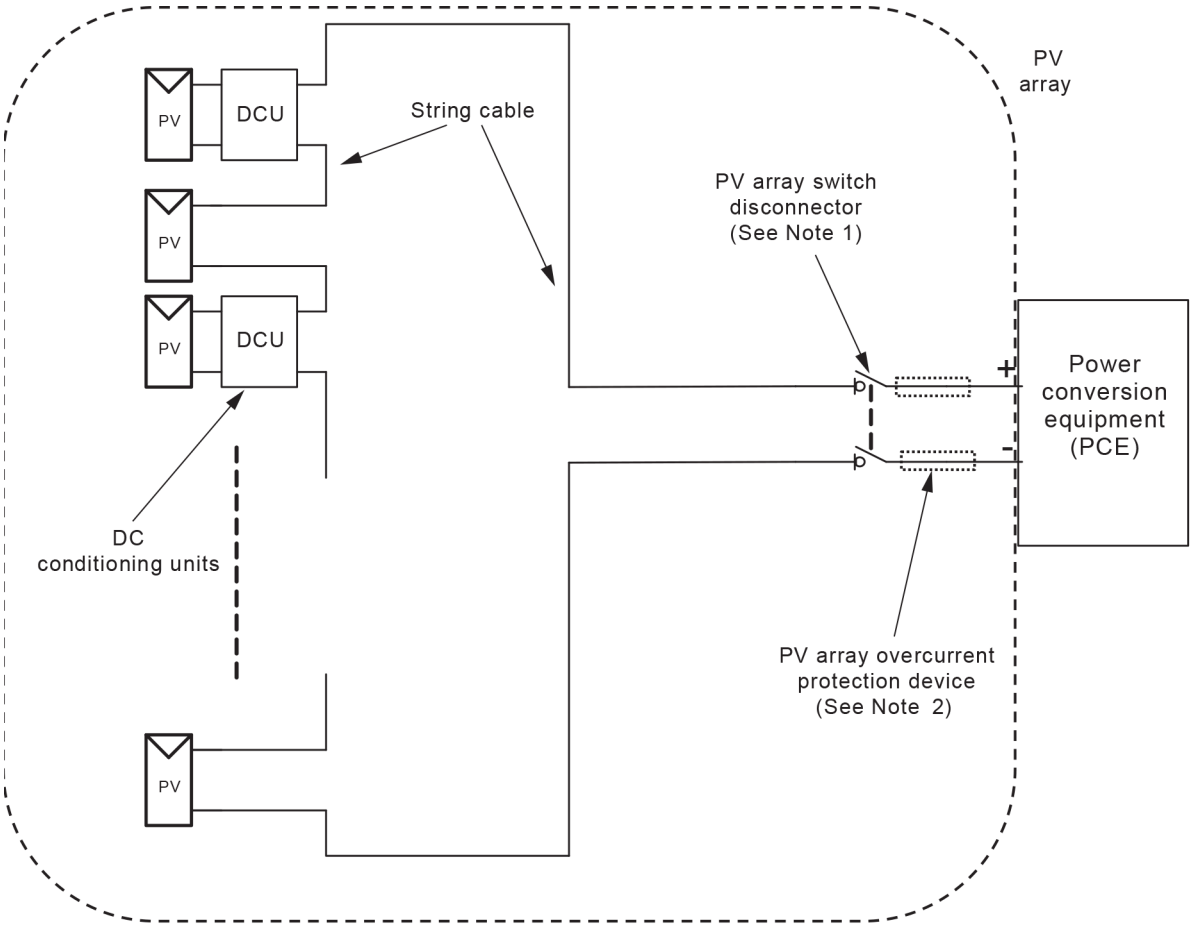

NOTE 1 See 7.2.6 and 7.3.1 for PV array isolation device with breaking capabilities requirements.

NOTE 2 Overcurrent protection devices where required (see 6.5).

NOTE 3 The individual PV modules in this diagram may be replaced by multiple PV modules in series or parallel.

Figure 8 – Example of partial DCU string

Documents
Document Sharing Hub
Full document details: BS IEC 62548-1:2023

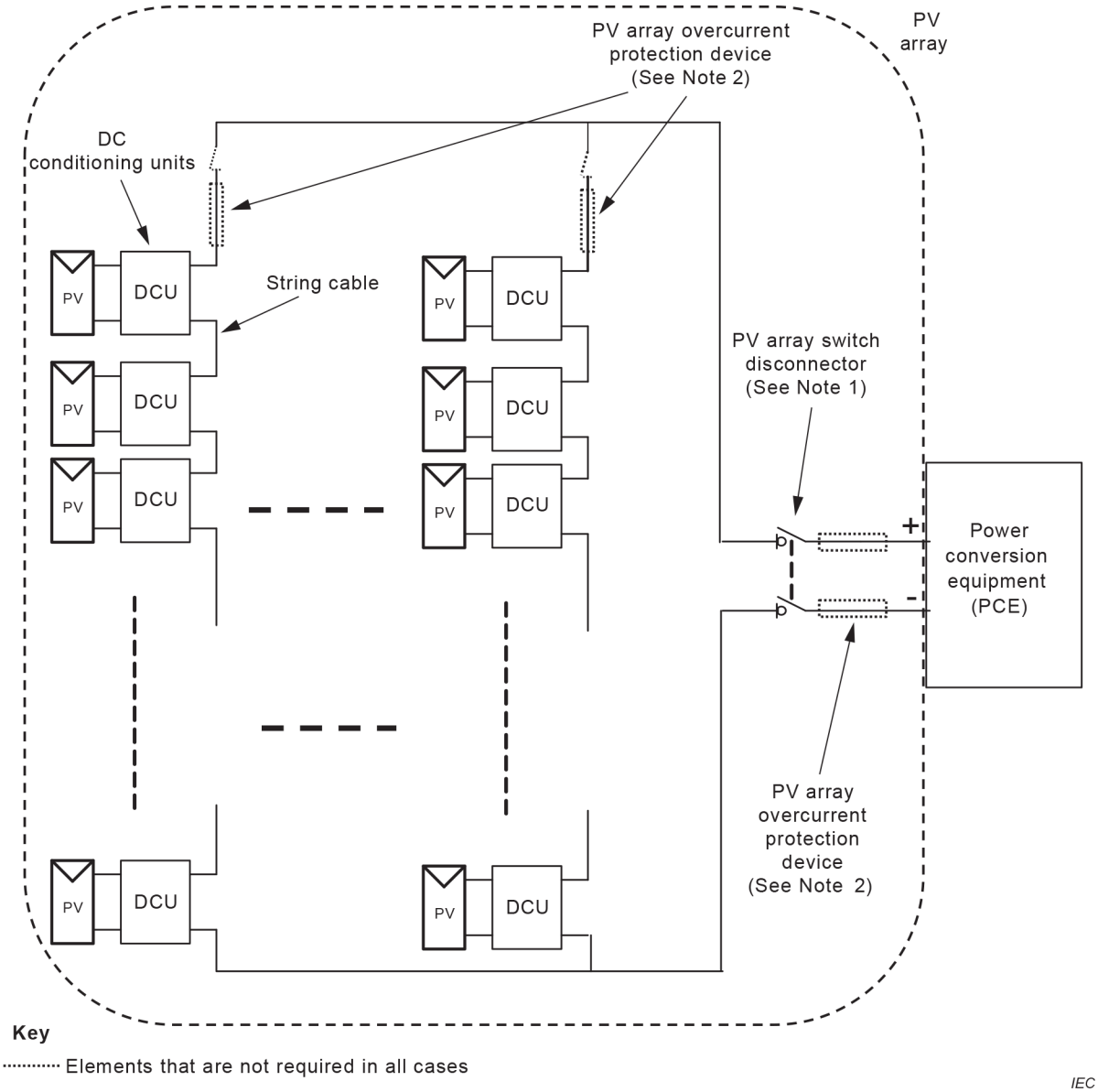

NOTE 1 See 7.2.6 and 7.3.1 for PV array isolation device with breaking capabilities requirements.

NOTE 2 Overcurrent protection devices and or isolators where required (see 6.5).

NOTE 3 The individual PV modules in this diagram may be replaced by multiple PV modules in series or parallel.

Figure 9 – PV parallel strings constructed using DCUs

Documents
Document Sharing Hub
Full document details: BS IEC 62548-1:2023