BS IEC 62679-3-2:2013

BSI Standards Publication

Electronic paper display

Part 3-2: Measuring method — Electro-optical

bsi.

...making excellence a habit.™

Document Sharing Hub

National foreword

This British Standard is the UK implementation of IEC 62679-3-2:2013.

The UK participation in its preparation was entrusted to Technical Committee EPL/47, Semiconductors.

A list of organizations represented on this committee can be obtained on request to its secretary.

This publication does not purport to include all the necessary provisions of a contract. Users are responsible for its correct application.

© The British Standards Institution 2014.
Published by BSI Standards Limited 2014

ISBN 978 0 580 71424 5
ICS 31.120; 31.260

Compliance with a British Standard cannot confer immunity from legal obligations.

This British Standard was published under the authority of the Standards Policy and Strategy Committee on 31 July 2014.

Amendments/corrigenda issued since publication

Date	Text affected

Documents
Document Sharing Hub

Full document details: BS IEC 62679-3-2:2013

IEC 62679-3-2

Edition 1.0 2013-09

INTERNATIONAL STANDARD

NORME INTERNATIONALE

colour inside

Electronic paper display – Part 3-2: Measuring method – Electro-optical

Afficheur de papier électronique – Partie 3-2: Méthode de mesure – Electro-optique

INTERNATIONAL ELECTROTECHNICAL COMMISSION

COMMISSION ELECTROTECHNIQUE INTERNATIONALE

PRICE CODE
CODE PRIX T

ICS 31.120; 31.260

ISBN 978-2-8322-1044-4

Warning! Make sure that you obtained this publication from an authorized distributor.
Attention! Veuillez vous assurer que vous avez obtenu cette publication via un distributeur agréé.

® Registered trademark of the International Electrotechnical Commission
Marque déposée de la Commission Electrotechnique Internationale

AVA Documents
Document Sharing Hub

Full document details: BS IEC 62679-3-2:2013

CONTENTS

FOREWORD 4
1 Scope 6
2 Abbreviations 6
3 Overview 6
3.1 General 6
3.2 Measuring equipment 6
3.3 Standard locations of measurement field 7
3.3.1 Matrix displays 7
3.3.2 Segment displays 7
3.4 Initial reflectance light signal 8
3.5 Standard DUT operating conditions 9
3.5.1 General 9
3.5.2 Response time 9
3.5.3 Frame response 11
3.6 Electrical characteristics – Rewriting electric energy 15
3.6.1 Purpose 15
3.6.2 Measuring instruments 15
3.6.3 Measuring method 15
3.6.4 Explanation 16
3.6.5 Specified conditions 17
3.7 Image retention duration 17
3.7.1 Purpose 17
3.7.2 Measuring instruments 17
3.7.3 Measuring method 17
3.7.4 Explanation 18
3.7.5 Specified conditions 18
3.8 Electric power of keeping the image contrast 19
3.8.1 Purpose 19
3.8.2 Measuring instruments 19
3.8.3 Measuring method 19
3.8.4 Explanation 20
3.8.5 Specified conditions 20
3.9 Electric energy of keeping the image contrast for a certain time period 21
3.9.1 Purpose 21
3.9.2 Measuring instruments 21
3.9.3 Measuring method 21
3.9.4 Explanation 22
3.9.5 Specified conditions 23
Bibliography 24

Figure 1 – Measurement locations of display active area 7
Figure 2 – HL pattern 8
Figure 3 – Sampling points 8
Figure 4 – An example of block diagram of an electronic paper display panel and module 10
Figure 5 – Relationship between driving signal and optical response time 10

AVA Documents
Document Sharing Hub
Full document details: BS IEC 62679-3-2:2013

Figure 6 – An example of driving signal and frame response time (segment) 13
Figure 7 – An example of driving signal and frame response time (matrix) 14
Figure 8 – Checkerboard pattern 16
Figure 9 – An example of block diagram for measuring the rewriting electric energy of an electronic paper display module 16
Figure 10 – Temporal characteristics of contrast ratio 18
Figure 11 – Image contrast and driving mode 19
Figure 12 – Image contrast, driving mode and measuring period 22

Documents
Document Sharing Hub
Full document details: BS IEC 62679-3-2:2013

INTERNATIONAL ELECTROTECHNICAL COMMISSION

ELECTRONIC PAPER DISPLAY –

Part 3-2: Measuring method – Electro-optical

FOREWORD

1) The International Electrotechnical Commission (IEC) is a worldwide organization for standardization comprising all national electrotechnical committees (IEC National Committees). The object of IEC is to promote international co-operation on all questions concerning standardization in the electrical and electronic fields. To this end and in addition to other activities, IEC publishes International Standards, Technical Specifications, Technical Reports, Publicly Available Specifications (PAS) and Guides (hereafter referred to as "IEC Publication(s)"). Their preparation is entrusted to technical committees; any IEC National Committee interested in the subject dealt with may participate in this preparatory work. International, governmental and non-governmental organizations liaising with the IEC also participate in this preparation. IEC collaborates closely with the International Organization for Standardization (ISO) in accordance with conditions determined by agreement between the two organizations.
2) The formal decisions or agreements of IEC on technical matters express, as nearly as possible, an international consensus of opinion on the relevant subjects since each technical committee has representation from all interested IEC National Committees.
3) IEC Publications have the form of recommendations for international use and are accepted by IEC National Committees in that sense. While all reasonable efforts are made to ensure that the technical content of IEC Publications is accurate, IEC cannot be held responsible for the way in which they are used or for any misinterpretation by any end user.
4) In order to promote international uniformity, IEC National Committees undertake to apply IEC Publications transparently to the maximum extent possible in their national and regional publications. Any divergence between any IEC Publication and the corresponding national or regional publication shall be clearly indicated in the latter.
5) IEC itself does not provide any attestation of conformity. Independent certification bodies provide conformity assessment services and, in some areas, access to IEC marks of conformity. IEC is not responsible for any services carried out by independent certification bodies.
6) All users should ensure that they have the latest edition of this publication.
7) No liability shall attach to IEC or its directors, employees, servants or agents including individual experts and members of its technical committees and IEC National Committees for any personal injury, property damage or other damage of any nature whatsoever, whether direct or indirect, or for costs (including legal fees) and expenses arising out of the publication, use of, or reliance upon, this IEC Publication or any other IEC Publications.
8) Attention is drawn to the Normative references cited in this publication. Use of the referenced publications is indispensable for the correct application of this publication.
9) Attention is drawn to the possibility that some of the elements of this IEC Publication may be the subject of patent rights. IEC shall not be held responsible for identifying any or all such patent rights.

International Standard IEC 62679-3-2 has been prepared by IEC technical committee 110: Electronic display devices.

The text of this standard is based on the following documents:

FDIS	Report on voting
110/475/FDIS	110/502/RVD

Full information on the voting for the approval of this standard can be found in the report on voting indicated in the above table.

This publication has been drafted in accordance with the ISO/IEC Directives, Part 2.

A list of all parts in the IEC 62679 series, published under the general title *Electronic paper display*, can be found on the IEC website.

Documents
Document Sharing Hub

The committee has decided that the contents of this publication will remain unchanged until the stability date indicated on the IEC web site under "http://webstore.iec.ch" in the data related to the specific publication. At this date, the publication will be

- reconfirmed,
- withdrawn,
- replaced by a revised edition, or
- amended.

IMPORTANT – The 'colour inside' logo on the cover page of this publication indicates that it contains colours which are considered to be useful for the correct understanding of its contents. Users should therefore print this document using a colour printer.

Documents
Document Sharing Hub

Full document details: BS IEC 62679-3-2:2013

ELECTRONIC PAPER DISPLAY –

Part 3-2: Measuring method – Electro-optical

1 Scope

This part of IEC 62679 series is restricted to electronic paper display modules using either segment, passive, or active matrix, and either monochromatic, or colour type displays.

In order to achieve a useful and uniform description of the performance of these devices, specifications for commonly accepted relevant parameters are put forward.

The purpose of this part of IEC 62679 series is to indicate and list the procedure-dependent parameters and to prescribe the specific methods and conditions that are to be used for their uniform numerical determination.

2 Abbreviations

DUT – Device under test

LMD – Light measuring device

PWM – Pulse width modulation

3 Overview

3.1 General

It is intended that the future IEC 62679-3-1 will cover the proper illumination method and optical measurement method to evaluate the electro-optical property of electronic paper display modules.

If an electronic paper display module works in combination with an external touch-key-panel or an external front-light-unit, remove those for measuring. If it is not possible to remove these elements, this fact shall be mentioned. However, it is not necessary to mention the protective sheet.

It is assumed that all measurements are performed by personnel skilled in the general art of radiometric and electrical measurements as the purpose of this paper is not to give a detailed account of good practice in electrical and optical experimental physics. Furthermore, it is necessary to ensure that all equipment is suitably calibrated as is known to skilled personnel and that records of the calibration data and traceability are kept.

It is assumed that all measurements are performed under normal operation conditions as used in the finished product by the end user unless requested otherwise. This includes the driving signals (waveforms) of the electronic paper display panel and/or module.

NOTE An electronic paper display module consists of an electronic paper display panel (electro-optical material, back plane, and driving circuit) and a logic circuit (see Figure 4).

3.2 Measuring equipment

Luminance meter: the devices for measuring luminance can be realized by

- a spectro-radiometer with numerical $V(\lambda)$ correction

Documents
Document Sharing Hub
Full document details: BS IEC 62679-3-2:2013

- a photometer with filter adaption to $V(\lambda)$

where $V(\lambda)$ is the photopic response, as defined by the CIE 1931 standard observer in CIE/ISO 10527:1991.

Colorimeter: devices for measuring colour can be realized by

- spectro-radiometer with numerical evaluation (spectrophotometer),
- filter-colorimeter

3.3 Standard locations of measurement field

3.3.1 Matrix displays

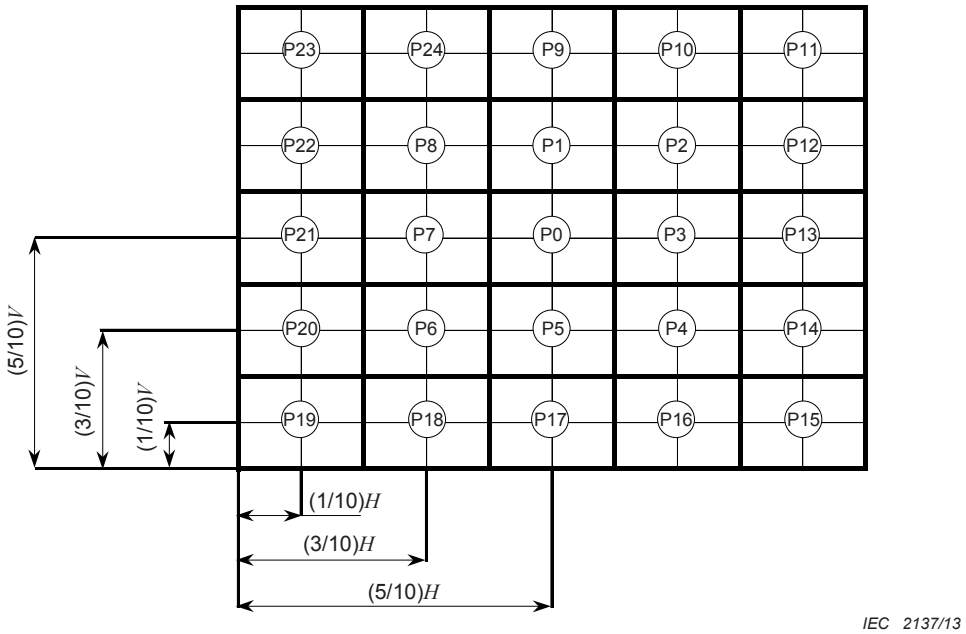

NOTE Standard measurement positions are at the centres of all rectangles P0 to P24. Height and width of each rectangle are 20 % of display active area height and width respectively.

Figure 1 – Measurement locations of display active area

Luminance, spectral distribution and/or tristimulus measurements may be taken at several specified positions on the DUT surface. To this end, the front view of the display is divided into 25 identical imaginary rectangles (see Figure 1). Unless otherwise specified, measurements are carried out in the centre of each rectangle. Care shall be taken that the measuring spots on the display do not overlap. Positioning of the measuring spot on the thus prescribed positions in the x and y axis shall be to within 7 % of V and H respectively (where V and H denote the length of the display active area in the x and y axis respectively).

While scanning the position of the measuring spot over the surface of the DUT, the polar angles shall stay fixed.

Any deviation from the above-described standard positions shall be added to the detail specification.

3.3.2 Segment displays

Standard measurement positions are the same as those prescribed for the matrix displays above. However, for segment displays, all measurements shall be performed at the centre of a segment and the chosen segment should be as close as possible to the centre of the designated rectangle. Thus, when measurements on position Pi (i = 0 to 24) are required,

AVA Documents
Document Sharing Hub
Full document details: BS IEC 62679-3-2:2013