BS IEC 62946-02:2017
Incorporating corrigendum March 2020

BSI Standards Publication

Connectors for electronic equipment

Part 02: Detail specification for 8-way, unshielded, free and fixed high density connectors for data transmission with frequencies up to 250 MHz and with current carrying capacity up to 1 A

Documents
Document Sharing Hub

Full document details: BS IEC 62946-02:2017

National foreword

This British Standard is the UK implementation of IEC 62946-02:2017, incorporating corrigendum March 2020.

The UK participation in its preparation was entrusted to Technical Committee EPL/48, Electromechanical components and mechanical structures for electronic equipment.

A list of organizations represented on this committee can be obtained on request to its secretary.

This publication does not purport to include all the necessary provisions of a contract. Users are responsible for its correct application.

© The British Standards Institution 2020
Published by BSI Standards Limited 2020

ISBN 978 0 539 13542 8

ICS 31.220.10

Compliance with a British Standard cannot confer immunity from legal obligations.

This British Standard was published under the authority of the Standards Policy and Strategy Committee on 28 February 2017.

Amendments/corrigenda issued since publication

Date	Text affected
30 June 2020	Implementation of IEC corrigendum March 2020: Introduction corrected

Documents
Document Sharing Hub

Full document details: BS IEC 62946-02:2017

IEC 62946-02

Edition 1.0 2017-01

INTERNATIONAL STANDARD

colour inside

Connectors for electronic equipment – Part 02: Detail specification for 8-way, unshielded, free and fixed high density connectors for data transmission with frequencies up to 250 MHz and with current carrying capacity up to 1 A

INTERNATIONAL
ELECTROTECHNICAL
COMMISSION

ICS 31.220.10

ISBN 978-2-8322-3838-7

Warning! Make sure that you obtained this publication from an authorized distributor.

® Registered trademark of the International Electrotechnical Commission

Documents
Document Sharing Hub

Full document details: BS IEC 62946-02:2017

CONTENTS

FOREWORD 4
INTRODUCTION 6
1 Scope 8
2 Normative references 8
3 Terms and definitions 8
4 Common features and typical connector pair 9
4.1 Mating information 9
4.1.1 General 9
4.1.2 Contacts – mating conditions 9
4.1.3 Fixed connector 10
4.1.4 Free connector 12
5 Characteristics 13
5.1 General 13
5.2 Pin and pair grouping assignment 13
5.3 Classification into climatic category 13
5.4 Electrical characteristics 13
5.4.1 General 13
5.4.2 Creepage and clearance distances 13
5.4.3 Contact resistance 14
5.4.4 Voltage proof 14
5.4.5 Current-temperature derating 14
5.4.6 Initial insulation resistance 15
5.4.7 Input to output d.c. resistance 15
5.4.8 Input to output d.c. resistance unbalance 15
5.4.9 Transfer impedance 16
5.5 Transmission characteristics 16
5.5.1 General 16
5.5.2 Insertion loss (IL) 16
5.5.3 Return loss (RL) 16
5.5.4 Near end cross talk (NEXT) 16
5.5.5 Far end cross talk (FEXT) 16
5.5.6 Transverse conversion loss (TCL) 17
5.5.7 Transverse conversion transfer loss (TCTL) 17
5.5.8 Propagation delay 17
5.5.9 Delay skew 17
5.6 Mechanical characteristics 17
5.6.1 Mechanical operation 17
5.6.2 Insertion and withdrawal forces 17
6 Tests and test schedule 17
6.1 General 17
6.2 Arrangement for contact resistance measurement 18
6.3 Arrangement for vibration test (test phase EP5), see Figure 8 19
6.4 Test procedures and measuring methods 20
6.5 Preconditioning 20
6.6 Test schedules 20
6.6.1 Basic (minimum) test schedule 20

AVA Documents
Document Sharing Hub

6.6.2 Full test schedule 20

Figure 1 – Contact interface dimensions with terminated free connector 9
Figure 2 – View of contact zone 10
Figure 3 – View of contact zone section A-A 11
Figure 4 – Free connector view 12
Figure 5 – Fixed connector pin and pair grouping assignment (front view of connector) 13
Figure 6 – Connector de-rating curve 15
Figure 7 – Arrangement for contact resistance measurement 18
Figure 8 – Arrangement for vibration test 19

Table 1 – Climatic categories – selected values 13
Table 2 – Creepage and clearance distances 14
Table 3 – Test group P – Preliminary 21
Table 4 – Test group AP – Mechanical endurance 22
Table 5 – Test group BP – Climatic 23
Table 6 – Test group CP – Corrosion 24
Table 7 – Test group DP – Moisture 25
Table 8 – Test group EP – Dynamic stress 26
Table 9 – Test group FP – Latch and cable stress 27
Table 10 – Test group GP – Signal integrity 28

Documents
Document Sharing Hub

Full document details: BS IEC 62946-02:2017

INTERNATIONAL ELECTROTECHNICAL COMMISSION

CONNECTORS FOR ELECTRICAL AND ELECTRONIC EQUIPMENT –

Part 02: Detail specification for 8-way, unshielded, free and fixed high density connectors for data transmission with frequencies up to 250 MHz and with current carrying capacity up to 1 A

FOREWORD

1) The International Electrotechnical Commission (IEC) is a worldwide organization for standardization comprising all national electrotechnical committees (IEC National Committees). The object of IEC is to promote international co-operation on all questions concerning standardization in the electrical and electronic fields. To this end and in addition to other activities, IEC publishes International Standards, Technical Specifications, Technical Reports, Publicly Available Specifications (PAS) and Guides (hereafter referred to as "IEC Publication(s)"). Their preparation is entrusted to technical committees; any IEC National Committee interested in the subject dealt with may participate in this preparatory work. International, governmental and non-governmental organizations liaising with the IEC also participate in this preparation. IEC collaborates closely with the International Organization for Standardization (ISO) in accordance with conditions determined by agreement between the two organizations.
2) The formal decisions or agreements of IEC on technical matters express, as nearly as possible, an international consensus of opinion on the relevant subjects since each technical committee has representation from all interested IEC National Committees.
3) IEC Publications have the form of recommendations for international use and are accepted by IEC National Committees in that sense. While all reasonable efforts are made to ensure that the technical content of IEC Publications is accurate, IEC cannot be held responsible for the way in which they are used or for any misinterpretation by any end user.
4) In order to promote international uniformity, IEC National Committees undertake to apply IEC Publications transparently to the maximum extent possible in their national and regional publications. Any divergence between any IEC Publication and the corresponding national or regional publication shall be clearly indicated in the latter.
5) IEC itself does not provide any attestation of conformity. Independent certification bodies provide conformity assessment services and, in some areas, access to IEC marks of conformity. IEC is not responsible for any services carried out by independent certification bodies.
6) All users should ensure that they have the latest edition of this publication.
7) No liability shall attach to IEC or its directors, employees, servants or agents including individual experts and members of its technical committees and IEC National Committees for any personal injury, property damage or other damage of any nature whatsoever, whether direct or indirect, or for costs (including legal fees) and expenses arising out of the publication, use of, or reliance upon, this IEC Publication or any other IEC Publications.
8) Attention is drawn to the Normative references cited in this publication. Use of the referenced publications is indispensable for the correct application of this publication.

International Standard IEC 62946-02 has been prepared by subcommittee 48B: Electrical connectors, of IEC technical committee 48: Electrical connectors and mechanical structures for electrical and electronic equipment.

The text of this International Standard is based on the following documents:

FDIS	Report on voting
48B/2537/FDIS	48B/2546/RVD

Full information on the voting for the approval of this International Standard can be found in the report on voting indicated in the above table.

This document has been drafted in accordance with the ISO/IEC Directives, Part 2.

A list of all parts in the IEC 62946 series, under the general title *Connectors for electronic equipment*, can be found on the IEC website.

AVA Documents Document Sharing Hub

Full document details: BS IEC 62946-02:2017

The committee has decided that the contents of this document will remain unchanged until the stability date indicated on the IEC website under "http://webstore.iec.ch" in the data related to the specific document. At this date, the document will be

- reconfirmed,
- withdrawn,
- replaced by a revised edition, or
- amended.

A bilingual version of this publication may be issued at a later date.

IMPORTANT – The 'colour inside' logo on the cover page of this publication indicates that it contains colours which are considered to be useful for the correct understanding of its contents. Users should therefore print this document using a colour printer.

The contents of the corrigendum of March 2020 have been included in this copy.

Documents
Document Sharing Hub

Full document details: BS IEC 62946-02:2017

INTRODUCTION

The International Electrotechnical Commission (IEC) draws attention to the fact that it is claimed that compliance with this document may involve the use of a patent concerning connectors given in this specification.

The IEC takes no position concerning the evidence, validity and scope of this patent right.

The holder of this patent right has assured the IEC that he is willing to grant licenses with applicants throughout the world on a non-discriminatory basis and on reasonable terms and conditions. In this respect, the statement of the holder of this patent is registered with the IEC.

Information may be obtained from:

TE Connectivity Ltd.,
Shanghai HQ,
No 1528 Gumei Road,
Caohejing, 200233,
Shanghai, China.
Telephone +86-21-33980276.
Email: bowen.yu@te.com

Attention is drawn to the possibility that some of the elements of this International Standard may be the subject of patent rights other than those identified above. IEC shall not be held responsible for identifying any or all such patent rights.

ISO (www.iso.org/patents) and IEC (http://patents.iec.ch) maintain on-line data bases of patents relevant to their standards. Users are encouraged to consult the data bases for the most up to date information concerning patents.

Documents
Document Sharing Hub

Full document details: BS IEC 62946-02:2017

	IEC 62946-02, Ed. 1 (date of issue)
Subcommittee 48B: Electrical connectors	
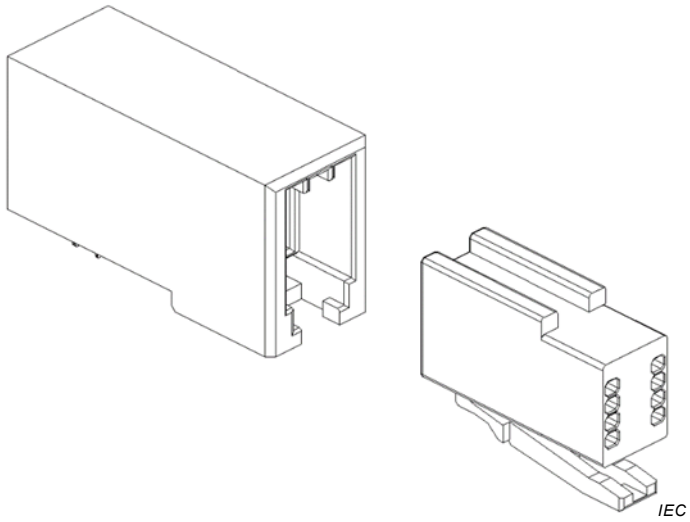	8-way, unshielded, free and fixed high density connectors for data transmission up to 250 MHz and with current carrying capacity up to 1 A.
	Fixed connectors are mounted on printed circuit board, the free connector is attached to wires.

Documents
Document Sharing Hub
Full document details: BS IEC 62946-02:2017

CONNECTORS FOR ELECTRICAL AND ELECTRONIC EQUIPMENT –

Part 02: Detail specification for 8-way, unshielded, free and fixed high density connectors for data transmission with frequencies up to 250 MHz and with current carrying capacity up to 1 A

1 Scope

This part of IEC 62946 covers 8-way, unshielded free and fixed high density connectors for data transmission with frequencies up to 250 MHz and with extra low voltage current carrying capabilities up to 1 A, and is intended to specify the common dimensions, mechanical, electrical, signal integrity and environmental characteristics and tests for these connectors.

2 Normative references

The following documents are referred to in the text in such a way that some or all of their content constitutes requirements of this document. For dated references, only the edition cited applies. For undated references, the latest edition of the referenced document (including any amendments) applies.

IEC 60050-581, *International Electrotechnical Vocabulary (IEV) – Chapter 581: Electromechanical components for electronic equipment*

IEC 60068-1, *Environmental testing – Part 1: General and guidance*

IEC 60512 (all parts), *Connectors for electronic equipment – Tests and measurements*

IEC 60512-1, *Connectors for electronic equipment – Tests and measurements – Part 1: General*

IEC 60512-1-100, *Connectors for electronic equipment – Tests and measurements – Part 1-100: General – Applicable publications*

IEC 60512-11-7, *Connectors for electronic equipment – Tests and measurements – Part 11-7: Climatic tests – Test 11g: Flowing mixed gas corrosion test*

IEC 60512-26-100, *Connectors for electronic equipment – Tests and measurements – Part 26-100: Measurement setup, test and reference arrangements and measurements for connectors according to IEC 60603-7 – Tests 26a to 26g*

IEC 61984, *Connectors – Safety requirements and tests*

ISO/IEC 11801, *Information technology – Generic cabling for customer premises*

3 Terms and definitions

For the purposes of this document, the terms and definitions given in IEC 60050-581,

IEC 60512-1 and the following apply.

Documents
Document Sharing Hub

Full document details: BS IEC 62946-02:2017