BS IEC 62977-3-9:2023

BSI Standards Publication

Electronic displays

Part 3-9: Evaluation of optical performance — Display sparkle contrast

Documents
Document Sharing Hub

Full document details: BS IEC 62977-3-9:2023

National foreword

This British Standard is the UK implementation of IEC 62977-3-9:2023.

The UK participation in its preparation was entrusted to Technical Committee EPL/47, Semiconductors.

A list of organizations represented on this committee can be obtained on request to its committee manager.

Contractual and legal considerations

This publication has been prepared in good faith, however no representation, warranty, assurance or undertaking (express or implied) is or will be made, and no responsibility or liability is or will be accepted by BSI in relation to the adequacy, accuracy, completeness or reasonableness of this publication. All and any such responsibility and liability is expressly disclaimed to the full extent permitted by the law.

This publication is provided as is, and is to be used at the recipient's own risk.

The recipient is advised to consider seeking professional guidance with respect to its use of this publication.

This publication is not intended to constitute a contract. Users are responsible for its correct application.

© The British Standards Institution 2023
Published by BSI Standards Limited 2023

ISBN 978 0 539 05051 6

ICS 31.120; 31.260

Compliance with a British Standard cannot confer immunity from legal obligations.

This British Standard was published under the authority of the Standards Policy and Strategy Committee on 30 June 2023.

Amendments/corrigenda issued since publication

Date	Text affected

Documents
Document Sharing Hub

Full document details: BS IEC 62977-3-9:2023

IEC 62977-3-9

Edition 1.0 2023-06

INTERNATIONAL STANDARD

colour inside

Electronic displays –
Part 3-9: Evaluation of optical performance – Display sparkle contrast

INTERNATIONAL
ELECTROTECHNICAL
COMMISSION

ICS 31.120; 31.260

ISBN 978-2-8322-7063-9

Warning! Make sure that you obtained this publication from an authorized distributor.

® Registered trademark of the International Electrotechnical Commission

Documents
Document Sharing Hub

Full document details: BS IEC 62977-3-9:2023

CONTENTS

FOREWORD 4
1 Scope 6
2 Normative references 6
3 Terms, definitions, abbreviated terms and letter symbols 6
3.1 Terms and definitions 6
3.2 Abbreviated terms 7
3.3 Letter symbols 7
4 Standard measurement conditions 9
4.1 Environmental conditions 9
4.2 Dark room conditions 9
4.3 Warm-up time 9
4.4 Measurement coordinate systems 9
4.5 Standard conditions for the measuring equipment 10
4.5.1 General 10
4.5.2 Conditions of measuring equipment 11
4.5.3 Standard measurement locations 12
4.6 Test pattern 12
5 Measurement methods 13
5.1 Purpose 13
5.2 Equipment and conditions 13
5.3 Measurement procedure 13
5.4 Calculation 14
5.5 Report 14
Annex A (informative) Imaging and sampling conditions of sparkle pattern 15
A.1 Oversampling 15
A.2 Undersampling 16
Annex B (informative) Filtering methods for removing periodic modulations from the image 17
B.1 General 17
B.2 Filtering methods 18
B.2.1 Filtering in spatial domain 18
B.2.2 Filtering in frequency-domain 20
Annex C (informative) Hardware parameters that affect the sparkle contrast 21
C.1 LMD aperture setting 21
C.2 LMD focus 21
C.3 Condition to avoid aliasing 22
Annex D (informative) Sparkle contrast measurement with display mock-up 23
D.1 Display mock-up 23
D.2 Measurement 23
Annex E (informative) Calculation of sparkle contrast by the difference image method 25
E.1 Statistical background 25
E.2 Measurement procedure of the difference image method 25
E.3 Calculation of sparkle contrast by the difference image method 26
Annex F (informative) Calculation of sparkle contrast by the pixel power deviation method 27
F.1 Pixel power deviation description 27

AVA Documents
Document Sharing Hub

F.2 Measurement procedure for the PPD method 27
Annex G (informative) Elimination of low-frequency radiance variation from the sparkle pattern 29
G.1 General 29
G.2 Normalization of the local average radiance of segmented sparkle pattern 29
G.3 Calculating the mean or median value of the segmented sparkle pattern 30
Bibliography 31

Figure 1 – Cartesian coordinate system and spherical coordinate system for the specification of the viewer's gazing (viewing) direction 9
Figure 2 – Typical relative spectral response of a CCD detector array without IR-blocking filter (B/W camera) and a luminance meter with a sensitivity according to CIE $V(\lambda)$ 11
Figure 3 – Measurement setup 13
Figure A.1 – Examples of sparkle image from the same DUT under different measurement distances 16
Figure B.1 – Display matrix element (grey square) in relation to the matrix of the imaging LMD detector elements (squares according to LMD pixel pitch) for the case of oversampling with an image sampling ratio of R_S = 3,5 18
Figure B.2 – Examples of sparkle patterns at R_S = 4,3 before applying an MWA filter (left) and after applying an MWA filter (right) 19
Figure B.3 – Electronic images of the DUT (i.e., display matrix elements with AGL, left) and frequency components of that image used as basis for sparkle evaluation 20
Figure C.1 – Example of the variation of the MTF of the imaging LMD under different F-numbers as a function of spatial frequency of LMD pixels 21
Figure D.1 – Examples of display mock-ups 23
Figure D.2 – Example of measurement configuration 24
Figure G.1 – Example of the segmentation of the measurement field for the preparation of the elimination of the low-frequency radiance variations from the sparkle pattern 29

Table 1 – Letter symbols (quantity symbols and units) 7
Table 2 – Distinguishing types of DUT, imaging conditions, number of involved images and methods for suppression of display matrix modulations 10
Table B.1 – Filtering method capabilities for removing artifacts related to display matrix elements 17

Documents
Document Sharing Hub
Full document details: BS IEC 62977-3-9:2023

INTERNATIONAL ELECTROTECHNICAL COMMISSION

ELECTRONIC DISPLAYS –

Part 3-9: Evaluation of optical performance – Display sparkle contrast

FOREWORD

1) The International Electrotechnical Commission (IEC) is a worldwide organization for standardization comprising all national electrotechnical committees (IEC National Committees). The object of IEC is to promote international co-operation on all questions concerning standardization in the electrical and electronic fields. To this end and in addition to other activities, IEC publishes International Standards, Technical Specifications, Technical Reports, Publicly Available Specifications (PAS) and Guides (hereafter referred to as "IEC Publication(s)"). Their preparation is entrusted to technical committees; any IEC National Committee interested in the subject dealt with may participate in this preparatory work. International, governmental and non-governmental organizations liaising with the IEC also participate in this preparation. IEC collaborates closely with the International Organization for Standardization (ISO) in accordance with conditions determined by agreement between the two organizations.
2) The formal decisions or agreements of IEC on technical matters express, as nearly as possible, an international consensus of opinion on the relevant subjects since each technical committee has representation from all interested IEC National Committees.
3) IEC Publications have the form of recommendations for international use and are accepted by IEC National Committees in that sense. While all reasonable efforts are made to ensure that the technical content of IEC Publications is accurate, IEC cannot be held responsible for the way in which they are used or for any misinterpretation by any end user.
4) In order to promote international uniformity, IEC National Committees undertake to apply IEC Publications transparently to the maximum extent possible in their national and regional publications. Any divergence between any IEC Publication and the corresponding national or regional publication shall be clearly indicated in the latter.
5) IEC itself does not provide any attestation of conformity. Independent certification bodies provide conformity assessment services and, in some areas, access to IEC marks of conformity. IEC is not responsible for any services carried out by independent certification bodies.
6) All users should ensure that they have the latest edition of this publication.
7) No liability shall attach to IEC or its directors, employees, servants or agents including individual experts and members of its technical committees and IEC National Committees for any personal injury, property damage or other damage of any nature whatsoever, whether direct or indirect, or for costs (including legal fees) and expenses arising out of the publication, use of, or reliance upon, this IEC Publication or any other IEC Publications.
8) Attention is drawn to the Normative references cited in this publication. Use of the referenced publications is indispensable for the correct application of this publication.
9) Attention is drawn to the possibility that some of the elements of this IEC Publication may be the subject of patent rights. IEC shall not be held responsible for identifying any or all such patent rights.

IEC 62977-3-9 has been prepared by IEC technical committee 110: Electronic displays. It is an International Standard.

The text of this International Standard is based on the following documents:

Draft	Report on voting
110/1515/FDIS	110/1525/RVD

Full information on the voting for its approval can be found in the report on voting indicated in the above table.

The language used for the development of this International Standard is English.

Documents
Document Sharing Hub

Full document details: BS IEC 62977-3-9:2023

This document was drafted in accordance with ISO/IEC Directives, Part 2, and developed in accordance with ISO/IEC Directives, Part 1 and ISO/IEC Directives, IEC Supplement, available at www.iec.ch/members_experts/refdocs. The main document types developed by IEC are described in greater detail at www.iec.ch/publications.

A list of all parts in the IEC 62977 series, under the general title *Electronic displays*, can be found on the IEC website.

The committee has decided that the contents of this document will remain unchanged until the stability date indicated on the IEC website under webstore.iec.ch in the data related to the specific document. At this date, the document will be

- reconfirmed,
- withdrawn,
- replaced by a revised edition, or
- amended.

IMPORTANT – The "colour inside" logo on the cover page of this document indicates that it contains colours which are considered to be useful for the correct understanding of its contents. Users should therefore print this document using a colour printer.

Documents
Document Sharing Hub

Full document details: BS IEC 62977-3-9:2023

ELECTRONIC DISPLAYS –

Part 3-9: Evaluation of optical performance – Display sparkle contrast

1 Scope

This part of IEC 62977 specifies standard measurement conditions and methods for determining the sparkle contrast of direct-view displays which comprise display matrix elements to render real 2D images on a flat panel and an anti-glare layer. This document excludes measurement of sparkle, which is intentionally obtained by the specular reflection from reflecting flakes in coatings and paints.

2 Normative references

There are no normative references in this document.

3 Terms, definitions, abbreviated terms and letter symbols

For the purposes of this document, the following terms and definitions apply.

ISO and IEC maintain terminology databases for use in standardization at the following addresses:

- IEC Electropedia: available at https://www.electropedia.org/
- ISO Online browsing platform: available at https://www.iso.org/obp

3.1 Terms and definitions

3.1.1
sparkle
visual phenomenon that becomes obvious as a random pattern extending across the display area formed by a distribution of tiny patches (granules, dots) with varying luminance and chromaticity (depending on the test pattern shown on the display) through the anti-glare layer of the display, resulting in a visually disturbing pattern that is distinctly changing with viewing direction

Note 1 to entry: In other fields, the term “sparkle” can refer to reflections from reflecting particles in effect coatings [1].

Note 2 to entry: Sparkle looks like “speckle” [2] in the field of laser displays (coherent or partially coherent light), however sparkle and speckle are different because the origins of both phenomena are quite different.

3.1.2
sparkle pattern
radiance distribution of sparkle

Note 1 to entry: The sparkle pattern can contain (1) periodic modulations caused by the display pixel matrix, (2) non-periodic effects caused by, for example, pixel defects, and (3) low-frequency radiance variations caused by non-uniformities of the backlight unit.

Documents
Document Sharing Hub
Full document details: BS IEC 62977-3-9:2023

3.1.3
sparkle contrast
S_P
quotient of the standard deviation of the radiance variation of the sparkle pattern in the measurement field divided by its mean (average) value

3.1.4
anti-glare layer
AGL
scattering layer for the suppression of distinct (mirror) images of ambient light sources reflected by smooth polished (display) surfaces

3.1.5
image sampling ratio
ISR
ratio of the pitch of display matrix elements multiplied by the magnification of the imaging lens to the pitch of the elements of the detector array

Note 1 to entry: For the details, see Annex A.

Note 2 to entry: The display matrix element refers to a physical sub-pixel in the display products. In the display mock-up, it means a fundamental element partitioned by the black matrix.

3.2 Abbreviated terms

A/D analog/digital
AGL anti-glare layer
CCD charge coupled device
CMOS complementary metal oxide semiconductor
DUT device under test
ISR image sampling ratio
LMD light measuring device
MWA moving window averaging
MTF modulation transfer function
PPD pixel power deviation

3.3 Letter symbols

The letter symbols are shown in Table 1.

Table 1 – Letter symbols (quantity symbols and units)

Quantities	Symbols and units	
Fundamental frequency of the periodic modulation of the display matrix image	f_0	(lp/mm)
Measurement distance	L	(mm)
F-number (infinity)	$F\#$	(-)
Effective F-number	$F\#_E$	(-)
Focal length	f	(mm)
Image distance	Z_L	(mm)
Optical magnification	m	(-)
Image sampling ratio (ISR)	R_S	(-)
Diameter of the airy disk of the LMD lens as projected on the DUT	S	(µm)

AVA Documents
Document Sharing Hub

Quantities	Symbols and units	
Pitch of the image of the display matrix elements	P_D	(µm)
Dominant wavelength of the primary colour of the display	λ	(µm)
Standard deviation of the radiance variation of the sparkle pattern	σ	(W/sr/m^2)
Mean radiance of the sparkle pattern	μ	(W/sr/m^2)
Sparkle contrast	S_P	(-)
Radiance matrix representing the image of the DUT	$L(x, y)$	(-)
Square convolution kernel	$K(s, t)$	(-)
Radiance matrix representing the filtered DUT image	$L^*(x, y)$	(-)
Variables used during convolution	s, t	(-)
Number of LMD pixels in the square kernel per side given by the square of the closest odd integer	k	(-)
Sum of all weights used in the convolution matrix	S_W	(-)
Standard deviation of the radiance variation of the sparkle pattern from the image 1 which is used for the difference image method	σ_1	(W/sr/m^2)
Standard deviation of the radiance variation of the sparkle pattern from the image 2 which is used for the difference image method	σ_2	(W/sr/m^2)
Standard deviation of the radiance variation of the difference image	σ_{diff}	(W/sr/m^2)
Average background radiance used for the PPD calculation	bg	(W/sr/m^2)
Average sample radiance within the pixel bin with coordinates i and j, which is used for the PPD calculation	T_{ij}	(W/sr/m^2)
Average normalized sample radiance within the pixel bin with coordinates i and j, which is used for the PPD calculation	nT_{ij}	(W/sr/m^2)
Average normalized sample radiance over all element bins contained within area A, which is used for the PPD calculation	$\overline{nT_{ij}}$	(W/sr/m^2)
Average reference radiance within the element bin with coordinates i and j, which is used for the PPD calculation	R_{ij}	(W/sr/m^2)
Horizontal dimension in units of elements of area A which is used for the PPD calculation	u	(-)
Vertical dimension in units of elements of area A which is used for the PPD calculation	v	(-)
Number of segments per side used for the elimination method of the low-frequency radiance variations from the sparkle pattern	P	(-)
Number of LMD pixels per side in the segment used for the elimination method of the low-frequency radiance variations from the sparkle pattern	Q	(-)

NOTE 1 L is a distance from the DUT to the principal point of the imaging lens along with the optical axis. The principal point of the imaging lens can be determined experimentally by the method in section 17.5 of [3][1].

NOTE 2 Z_L is a distance from the principal point to the image point of the imaging lens along with the optical axis.

[1] Numbers in square brackets refer to the Bibliography.

Documents
Document Sharing Hub

Full document details: BS IEC 62977-3-9:2023

4 Standard measurement conditions

4.1 Environmental conditions

Measurements shall be carried out under the standard environmental conditions:

– temperature: 25 °C ± 3 °C,
– relative humidity: 25 % to 85 % RH,
– atmospheric pressure: 86 kPa to 106 kPa.

When different environmental conditions are used, they shall be noted in the measurement report.

4.2 Dark room conditions

The luminance contribution from ambient illumination reflected off the display shall be less than 1/20 of the lowest black level of the display. In the case of other dark room conditions, these shall be reported.

4.3 Warm-up time

The measurements shall be carried out after the DUT radiance and LMD are sufficiently stable. The radiance shall not vary by more than ±5 % over the entire measurement.

4.4 Measurement coordinate systems

The viewing direction is the direction under which the observer gazes at the point of interest on the device under test (DUT). During the measurement, the imaging light measurement device (LMD) simulates the observer, by aiming the LMD at the location of interest on the DUT from the viewing direction. The viewing direction is defined by two spherical angles: the angle of inclination θ (relative to the surface normal of the DUT) and the angle of rotation ϕ (also called azimuthal angle) as illustrated in Figure 1. Although the azimuthal angle is measured in the counter-clockwise direction, it is related to the directions on a clock face as follows: ϕ = 0° is the 3-o'clock direction ("right"), ϕ = 90° is the 12-o'clock direction ("top"), ϕ = 180° the 9-o'clock direction ("left") and ϕ = 270° the 6-o'clock direction ("bottom").

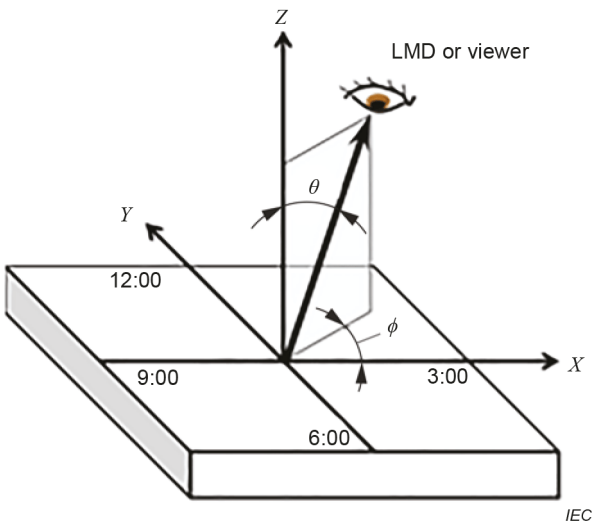

Figure 1 – Cartesian coordinate system and spherical coordinate system for the specification of the viewer's gazing (viewing) direction

Documents
Document Sharing Hub
Full document details: BS IEC 62977-3-9:2023