BS IEC 63145-22-20:2024

BSI Standards Publication

Eyewear display

Part 22-20: Specific measurement methods for AR type — Image quality

Documents
Document Sharing Hub

Full document details: BS IEC 63145-22-20:2024

National foreword

This British Standard is the UK implementation of IEC 63145-22-20:2024.

The UK participation in its preparation was entrusted to Technical Committee EPL/100, Audio-visual equipment.

A list of organizations represented on this committee can be obtained on request to its committee manager.

Contractual and legal considerations

This publication has been prepared in good faith, however no representation, warranty, assurance or undertaking (express or implied) is or will be made, and no responsibility or liability is or will be accepted by BSI in relation to the adequacy, accuracy, completeness or reasonableness of this publication. All and any such responsibility and liability is expressly disclaimed to the full extent permitted by the law.

This publication is provided as is, and is to be used at the recipient's own risk.

The recipient is advised to consider seeking professional guidance with respect to its use of this publication.

This publication is not intended to constitute a contract. Users are responsible for its correct application.

© The British Standards Institution 2024
Published by BSI Standards Limited 2024

ISBN 978 0 539 06610 4

ICS 17.180.99; 31.120

Compliance with a British Standard cannot confer immunity from legal obligations.

This British Standard was published under the authority of the Standards Policy and Strategy Committee on 29 February 2024.

Amendments/corrigenda issued since publication

Date	Text affected

Documents
Document Sharing Hub

Full document details: BS IEC 63145-22-20:2024

IEC 63145-22-20

Edition 1.0 2024-02

INTERNATIONAL STANDARD

colour inside

Eyewear display –
Part 22-20: Specific measurement methods for AR type – Image quality

INTERNATIONAL
ELECTROTECHNICAL
COMMISSION

ICS 17.180.99; 31.120

ISBN 978-2-8322-8131-4

Warning! Make sure that you obtained this publication from an authorized distributor.

® Registered trademark of the International Electrotechnical Commission

Documents
Document Sharing Hub

Full document details: BS IEC 63145-22-20:2024

CONTENTS

FOREWORD 4
1 Scope 6
2 Normative references 6
3 Terms, definitions, abbreviated terms and letter symbols 6
3.1 Terms and definitions 6
3.2 Abbreviated terms 7
3.3 Letter symbols (quantity symbols or unit symbols) 7
4 Standard measuring conditions 8
4.1 Standard environment conditions 8
4.2 Power supply 8
4.3 Warm-up time 8
4.4 Dark room condition 8
5 Measurement systems 8
5.1 Standard coordinate system 8
5.2 Measurement equipment 9
5.2.1 General 9
5.2.2 Light measuring device (LMD) 9
5.2.3 Stage conditions 9
5.2.4 Setup conditions 10
6 Background and see-through real scene conditions 10
6.1 General 10
6.2 Ambient background 11
6.3 Raster pattern (or grille pattern) targets 11
6.4 Crosshair pattern target 12
7 Test patterns of the virtual image 13
7.1 General 13
7.2 Checkerboard pattern 13
7.3 Solid colour patterns 13
7.4 Raster patterns 13
7.5 Measuring points 13
8 Measurement methods 13
8.1 Preparation 13
8.2 Luminous transmittance and spectral transmittance with an ambient diffuse illumination 14
8.2.1 General 14
8.2.2 Measuring conditions 14
8.2.3 Measuring procedures 14
8.2.4 Calculation 14
8.2.5 Report 16
8.3 Parameters related to virtual images 16
8.3.1 Ambient contrast ratio 16
8.3.2 Ambient chromaticity and chromaticity gamut area 18
8.3.3 Static image resolution 20
8.3.4 Secondary image effect 22
8.3.5 Flicker 24
8.4 Parameters related to see-through real scene 26

AVA Documents
Document Sharing Hub

8.4.1 See-through FOV 26
8.4.2 Variations in luminance and chromaticity of see-through real scenes 29
8.4.3 Real rectangular scene distortion 32
8.4.4 Real local geometric distortion 34
8.4.5 Ratio of Michelson contrast of the real scene 36
8.4.6 Luminance ratio of virtual image versus background 37
8.4.7 Monocular positioning accuracy 38
Bibliography 41

Figure 1 – Spherical coordinate system 9
Figure 2 – Three-dimensional Cartesian coordinate system 9
Figure 3 – Example of the ambient background 11
Figure 4 – Example of the setting for a raster pattern target 12
Figure 5 – Example of the setting for a crosshair pattern target 12
Figure 6 – Variation of Michelson contrast (i.e. luminance modulation) with line width 21
Figure 7 – Example of a secondary image 23
Figure 8 – Temporal contrast sensitivity function 25
Figure 9 – Example of the see-through FOV 28
Figure 10 – Measuring points of the real scene (origin at the centre B_0, corresponding to the optical axis of the DUT) 29
Figure 11 – Example of a real local geometric distortion 35
Figure 12 – Schematic diagram of the positioning measurement 39

Table 1 – Letter symbols (quantity symbols or unit symbols) 7
Table 2 – Temporal contrast sensitivity function 25
Table 3 – Example of the angle deviation of the 9 points and the distortions 34

Documents
Document Sharing Hub

Full document details: BS IEC 63145-22-20:2024

INTERNATIONAL ELECTROTECHNICAL COMMISSION

EYEWEAR DISPLAY –

Part 22-20: Specific measurement methods for AR type – Image quality

FOREWORD

1) The International Electrotechnical Commission (IEC) is a worldwide organization for standardization comprising all national electrotechnical committees (IEC National Committees). The object of IEC is to promote international co-operation on all questions concerning standardization in the electrical and electronic fields. To this end and in addition to other activities, IEC publishes International Standards, Technical Specifications, Technical Reports, Publicly Available Specifications (PAS) and Guides (hereafter referred to as "IEC Publication(s)"). Their preparation is entrusted to technical committees; any IEC National Committee interested in the subject dealt with may participate in this preparatory work. International, governmental and non-governmental organizations liaising with the IEC also participate in this preparation. IEC collaborates closely with the International Organization for Standardization (ISO) in accordance with conditions determined by agreement between the two organizations.
2) The formal decisions or agreements of IEC on technical matters express, as nearly as possible, an international consensus of opinion on the relevant subjects since each technical committee has representation from all interested IEC National Committees.
3) IEC Publications have the form of recommendations for international use and are accepted by IEC National Committees in that sense. While all reasonable efforts are made to ensure that the technical content of IEC Publications is accurate, IEC cannot be held responsible for the way in which they are used or for any misinterpretation by any end user.
4) In order to promote international uniformity, IEC National Committees undertake to apply IEC Publications transparently to the maximum extent possible in their national and regional publications. Any divergence between any IEC Publication and the corresponding national or regional publication shall be clearly indicated in the latter.
5) IEC itself does not provide any attestation of conformity. Independent certification bodies provide conformity assessment services and, in some areas, access to IEC marks of conformity. IEC is not responsible for any services carried out by independent certification bodies.
6) All users should ensure that they have the latest edition of this publication.
7) No liability shall attach to IEC or its directors, employees, servants or agents including individual experts and members of its technical committees and IEC National Committees for any personal injury, property damage or other damage of any nature whatsoever, whether direct or indirect, or for costs (including legal fees) and expenses arising out of the publication, use of, or reliance upon, this IEC Publication or any other IEC Publications.
8) Attention is drawn to the Normative references cited in this publication. Use of the referenced publications is indispensable for the correct application of this publication.
9) IEC draws attention to the possibility that the implementation of this document may involve the use of (a) patent(s). IEC takes no position concerning the evidence, validity or applicability of any claimed patent rights in respect thereof. As of the date of publication of this document, IEC had not received notice of (a) patent(s), which may be required to implement this document. However, implementers are cautioned that this may not represent the latest information, which may be obtained from the patent database available at https://patents.iec.ch. IEC shall not be held responsible for identifying any or all such patent rights.

IEC 63145-22-20 has been prepared by IEC technical committee 110: Electronic displays. It is an International Standard.

The text of this International Standard is based on the following documents:

Draft	Report on voting
110/1580/FDIS	110/1599/RVD

Full information on the voting for its approval can be found in the report on voting indicated in the above table.

The language used for the development of this International Standard is English.

Documents
Document Sharing Hub

This document was drafted in accordance with ISO/IEC Directives, Part 2, and developed in accordance with ISO/IEC Directives, Part 1 and ISO/IEC Directives, IEC Supplement, available at www.iec.ch/members_experts/refdocs. The main document types developed by IEC are described in greater detail at www.iec.ch/publications.

A list of all parts in the IEC 63145 series, published under the general title *Eyewear display*, can be found on the IEC website.

The committee has decided that the contents of this document will remain unchanged until the stability date indicated on the IEC website under webstore.iec.ch in the data related to the specific document. At this date, the document will be

- reconfirmed,
- withdrawn, or
- revised.

IMPORTANT – The "colour inside" logo on the cover page of this document indicates that it contains colours which are considered to be useful for the correct understanding of its contents. Users should therefore print this document using a colour printer.

Documents
Document Sharing Hub

Full document details: BS IEC 63145-22-20:2024

EYEWEAR DISPLAY –

Part 22-20: Specific measurement methods for AR type – Image quality

1 Scope

This part of IEC 63145 specifies the standard measuring conditions and measurement methods for determining the image quality of augmented reality (AR) type eyewear displays. This document applies to see-through type (AR glasses) eyewear displays using virtual image optics.

See-through type displays (VR glasses), contact lens-type displays, and retina direct projection displays are out of the scope of this document.

2 Normative references

The following documents are referred to in the text in such a way that some or all of their content constitutes requirements of this document. For dated references, only the edition cited applies. For undated references, the latest edition of the referenced document (including any amendments) applies.

IEC 63145-1-2, *Eyewear display – Part 1-2: Generic – Terminology*

IEC 63145-20-10:2019, *Eyewear display – Part 20-10: Fundamental measurements – Optical properties*

IEC 63145-20-20:2019, *Eyewear display– Part 20-20: Fundamental measurements – Image quality*

ISO 9241-302, *Ergonomics of human-system interaction – Part 302: Terminology for electronic visual displays*

ISO/CIE 11664-1, *Colorimetry – Part 1: CIE standard colorimetric observers*

ISO/CIE 11664-5, *Colorimetry – Part 5: CIE 1976 L*u*v* colour space and u', v' uniform chromaticity scale diagram*

CIE 015:2018, *Colorimetry*

3 Terms, definitions, abbreviated terms and letter symbols

3.1 Terms and definitions

For the purposes of this document, the terms and definitions given in IEC 63145-1-2, IEC 63145-20-10, IEC 63145-20-20 and ISO 9241-302 apply.

ISO and IEC maintain terminology databases for use in standardization at the following addresses:

- IEC Electropedia: available at https://www.electropedia.org/
- ISO Online browsing platform: available at https://www.iso.org/obp

Documents
Document Sharing Hub

Full document details: BS IEC 63145-22-20:2024

NOTE 1 Terms related to eyewear displays will be defined in specific projects.

NOTE 2 Additional terms can be found in IEC TR 63145-1-1 [1][1].

3.2 Abbreviated terms

2D two-dimensional

AR augmented reality

CIE Commission Internationale de l'Eclairage (International Commission on Illumination)

CPD cycles per degree

DUT device under test

FOV field of view

LMD light measuring device

ppd pixel per degree

3.3 Letter symbols (quantity symbols or unit symbols)

The letter symbols for eyewear display are shown in Table 1.

Table 1 – Letter symbols (quantity symbols or unit symbols)

Definition	Symbol
Measuring point of virtual image (i = 0 at the centre)	P_i
Measuring point of real scene target (i = 0 at the centre)	B_i
Luminance of a position (x, y, z) in a direction (α, Ψ) on the eyewear display	$L_v(x, y, z, \alpha, \Psi)$ (cd m^{-2})
Spectral radiance of the virtual image at P_i point under ambient illumination	$L_{Amb}(\lambda, i)$ (W sr^{-1} m^{-2} nm^{-1})
Spectral radiance of the virtual image at P_i point under dark background	$L_D(\lambda, i)$ (W sr^{-1} m^{-2} nm^{-1})
Average luminance (spatial)	L_{av} (cd m^{-2})
CIE 1931 chromaticity coordinates at P_i	x_i, y_i
Chromaticity gamut area	A_{xy}
CIE 1976 chromaticity coordinates at P_i	u'_i, v'_i
Chromaticity deviation	$\Delta u'v'$
Luminance ratio	C_{vb}
Ambient contrast ratio	CR_A
Spectral transmittance of the DUT at P_i point	$T(\lambda, i)$
Spectral radiance of the illumination background	$L_s(\lambda)$ (W sr^{-1} m^{-2} nm^{-1})
CIE standard spectral luminous efficiency for photopic vision	$V(\lambda)$
Wavelength interval	$\Delta\lambda$ (nm)

[1] Numbers in square brackets refer to the Bibliography.

Documents
Document Sharing Hub

Full document details: BS IEC 63145-22-20:2024

4 Standard measuring conditions

4.1 Standard environment conditions

Unless otherwise specified, all tests and measurements for eyewear displays shall be carried out after sufficient warm-up time for illumination sources and the DUT (see 4.3), under the following standard environmental conditions:

- temperature: 22°C to 28°C,
- relative humidity: 25 % to 85 %,
- atmospheric pressure: 86 kPa to 106 kPa.

When different environmental conditions are used, they shall be reported in detail in the specification.

4.2 Power supply

In order to stabilize the performance of the DUT, the power supply for driving the DUT shall be adjusted in accordance with the specification of the DUT.

4.3 Warm-up time

The optical performances of the DUT are affected by the transient temperature behaviour of the device. It takes a certain time for the DUT and LMD until their performances reach the steady-state. All measuring conditions shall be kept constant during the measurements. If the luminance output is not within a ±3 % variation, it shall be reported.

4.4 Dark room condition

The luminance contribution from the background of the test room reflected off the measurement space shall be less than 1/20 of the minimum luminance output from the DUT. If this condition is not satisfied, then background luminance can be subtracted, and it shall be reported.

5 Measurement systems

5.1 Standard coordinate system

A spherical coordinate system (α and Ψ angles) shall be used in the measurements, as shown in Figure 1. The polar axis is vertically oriented. The angles measured in the vertical half-planes of data are elevation angles, denoted as α, and the horizontal angles to the half-plane are azimuth angles, denoted as Ψ. A geographic coordinate chart can be used to express the spherical coordinates of the virtual image produced by the DUT. Refer to IEC 63145-20-10:2019, Clause 5.

The origin direction (α = 0, Ψ = 0) of the spherical coordinate system is coincident with the optical axis of the DUT. When performing measurements simulating eye rotation, the centre of the spherical coordinate system should be 10 mm behind the LMD entrance pupil.

To indicate the positional relationship between the designed eye point of the DUT and the entrance pupil of the human eye or LMD, a Cartesian coordinates system (x, y, z) is used, as shown in Figure 2.

The origin of the Cartesian coordinates system should be located at the centre of the entrance pupil of the eye, which is matched with the eye point of the DUT. The manufacturer or supplier should provide the eye point position.

Documents
Document Sharing Hub
Full document details: BS IEC 63145-22-20:2024

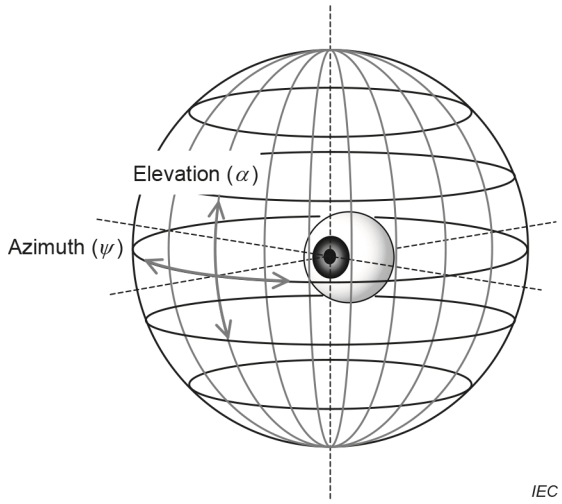

Figure 1 – Spherical coordinate system

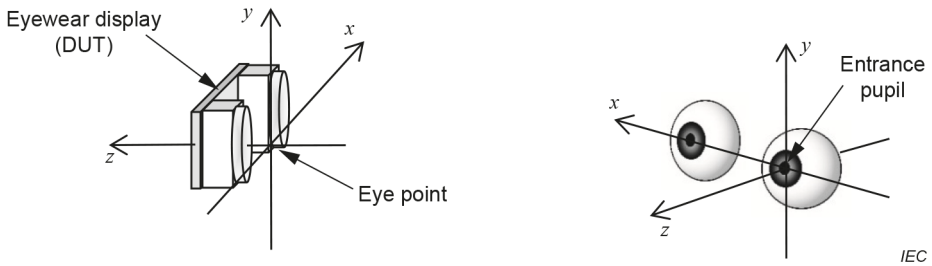

NOTE The drawing shows an example of adjusting the eye pupil to the eye point, which is the origin position.

Figure 2 – Three-dimensional Cartesian coordinate system

5.2 Measurement equipment

5.2.1 General

The configurations and operating conditions of the equipment should comply with the structures specified in each item. To ensure repeatable measurements, the requirements shall comply with IEC 63145-20-10. Otherwise, the differences shall be noted in the report.

5.2.2 Light measuring device (LMD)

The LMDs shall refer to the requirements in IEC 63145-20-10 unless otherwise specified in each item.

5.2.3 Stage conditions

5.2.3.1 General

The stage shall be used to realize the coordinate system specified in 5.1. The stage shall be constructed with the equivalent of a biaxial goniometer and an orthogonal three-axis translation stage.

Documents
Document Sharing Hub
Full document details: BS IEC 63145-22-20:2024

5.2.3.2 Goniometer

Refer IEC 63145-20-10:2019, 5.2.2.2.

A biaxial goniometer shall be assembled to be capable of measuring azimuth (horizontal) and elevation (vertical) angles in the spherical coordinate system as in Figure 1. Examples of the five-axis stage are shown in IEC 63145-20-10:2019, Figure 4. The angular accuracy should be no less than 0,1°. The goniometer can be pivoted at the centre of the entrance pupil of the LMD, or 10 mm behind the entrance pupil, or both, to simulate eye rotation.

5.2.3.3 Translation stage

Refer to IEC 63145-20-10:2019, 5.2.2.3.

An orthogonal three-axis translation stage assembles with an adequate range to cover the measuring distance such as the eye-box volume, and if necessary to cover the interpupillary distance for binocular DUTs, as in the example shown in IEC 63145-20-10:2019, Figure 4. The translation accuracy should be no less than 0,05 mm.

5.2.4 Setup conditions

Refer to IEC 63145-20-10:2019. 5.2.3.

The DUT shall be mounted on a stable platform to ensure image stability. The LMD position relative to the DUT shall be moved by using a five-axis system (a biaxial goniometer and three-axis orthogonally translation stage). The LMD installed on the biaxial goniometer, as in the example in IEC 63145-20-10:2019, Figure 4 a), shall be consistently pivoted around its pupil centre (eye point) or about the centre of the eyeball rotation for each set of measurements. The optical axis of the DUT, which is decided by a manufacturer or a supplier, shall be adjusted to the optical axis of the LMD and shall be aligned with the z-axis of the orthogonal three-axis translation stage. The aspect of the virtual image of the DUT shall be adjusted to the x- and y-axes of the orthogonal three-axis translation stage.

For the measuring condition from an anterior view, when the DUT does not suppose the change of gaze angle (eye rotation), the origin of a biaxial goniometer shall be assumed as the entrance pupil of the eye (i.e. eye point of the DUT), not the rotation centre of the eyeball (eye movement). When the origin of the biaxial goniometer does not match the eye point, the coordinate correction shall be required, and it shall be reported. When the DUT supposes the change of the gaze angle, detailed information such as the position of the rotation centre shall be specified by the manufacturer or the supplier and reported.

For the measurement of a see-through real scene, the real scene pattern target shall be set at a distance specified by the manufacturer or supplier, and the optical axis of the LMD shall be adjusted to be consistent with the normal line of the pattern target. The DUT installed on the biaxial goniometer as in the example in IEC 63145-20-10:2019, Figure 4 b), can be pivoted around its eye point (pupil rotation) or about the centre of the eye.

6 Background and see-through real scene conditions

6.1 General

The virtual image quality of AR type eyewear displays will be significantly affected by the background and see-through real scene conditions. The test background and see-through real scene shall comply with the specified luminance level and illuminant conditions in each item, as well as the distance, which are provided by the manufacturer or the supplier.

Documents
Document Sharing Hub

Full document details: BS IEC 63145-22-20:2024

6.2 Ambient background

Ambient background is a background condition to test the characteristics of the DUT under ambient illumination conditions. Figure 3 is an example of the ambient background setup. Uniform spherical illumination using a hemisphere, or a full integrating sphere with a stable light source, is used to generate the full-field background illumination. The solid angle of the full field shall be no less than the see-through FOV of the DUT. The luminance variation within the full field should be less than 2 % as measured by tilting the LMD over the full field. If this is not achieved, the background luminance should be corrected in the measurement at each direction, and the correction method and corrected variation value should be reported.

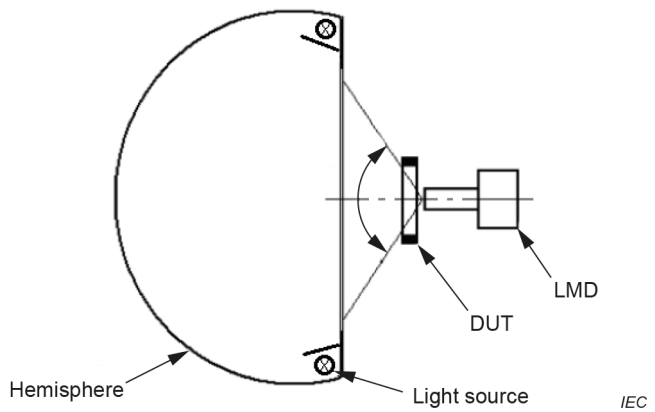

Figure 3 – Example of the ambient background

The relative spectral distribution of the light source shall comply with CIE illuminants, such as CIE Illuminant A, D50, or D65 as in CIE 015, and be reported. However, when a spectroradiometer is applied, the source can be a continuous smooth spectral power distribution of at least 380 nm to 780 nm, and the results can be obtained by calculating with the above CIE illuminants. The background luminance and its applied illuminant shall be specified by the manufacturer or the supplier. Some example cases of background luminance include indoor lighting (30 cd m^{-2} to 500 cd m^{-2}), outdoor sunlight (2 000 cd m^{-2} for overcast sky, and 15 000 cd m^{-2} for clear sky), but the application cases are flexible, and not specified in this document. The light from the surrounding scene consists of different components in actual use cases. In this document, ambient illumination with a diffuse profile is considered [2] to [4].

6.3 Raster pattern (or grille pattern) targets

The raster pattern targets are used to determine the Michelson contrast of the real scene for AR type eyewear displays at a direction (α, Ψ) in front of the viewer. The pattern can be implemented by setting a horizontal (or vertical, or both) raster pattern plate in front of the light output port of a uniform source, such as an integrating sphere or hemisphere or generated by a non-transparent display. The raster pattern plate can be composed of black (non-transparent) and transparent stripes with the same width, and the angular frequency (f_{CPD}) can be calculated from the black and white line-pairs of the raster pattern at a given distance which should be far enough from the DUT (e.g., more than 20 times of the measured pattern dimension) as shown in the example in Figure 4. The angular resolution shall be specified by the manufacturer or the supplier, for example of 60 cycles per degree, 30 cycles per degree, 15 cycles per degree, and 10 cycles per degree at the viewing location (eye point). The relative spectral distribution and luminance of the light output port shall be specified by the manufacturer or the supplier or as in 6.2.

Documents
Document Sharing Hub
Full document details: BS IEC 63145-22-20:2024

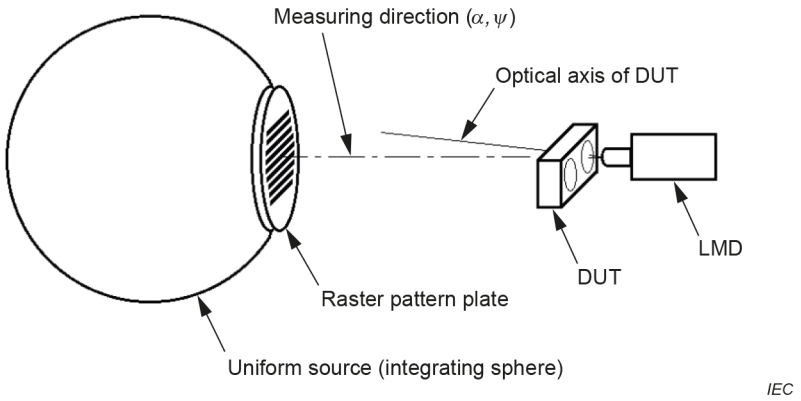

Figure 4 – Example of the setting for a raster pattern target

NOTE Display pixelation can cause non-uniformities within the grille. These variations will be smoothed out in the analysis.

6.4 Crosshair pattern target

The crosshair pattern target shall be used to test the geometric distortions of the real scene through AR type eyewear displays as well as the positioning accuracy of the virtual image to align with the real scene point at a direction (α, Ψ). The pattern is composed of a bright crosshair (cross) sign with a width provided by the manufacturer or the supplier, which can be achieved by setting a transparent cross plate in front of the light output port of a uniform source, as shown in the example in Figure 5.

NOTE 1 Crosshair pattern target is a transparent cross sign on a black plate target (made of metal or glass). It is commonly used in orientation and target alignment. Its width is considered relative to the test distance, and its line width is at a given distance, which is close to the minimum resolvable line width of the virtual image.

NOTE 2 In some cases, a crosshatch pattern with a width given by the manufacturer or the supplier can be applied.

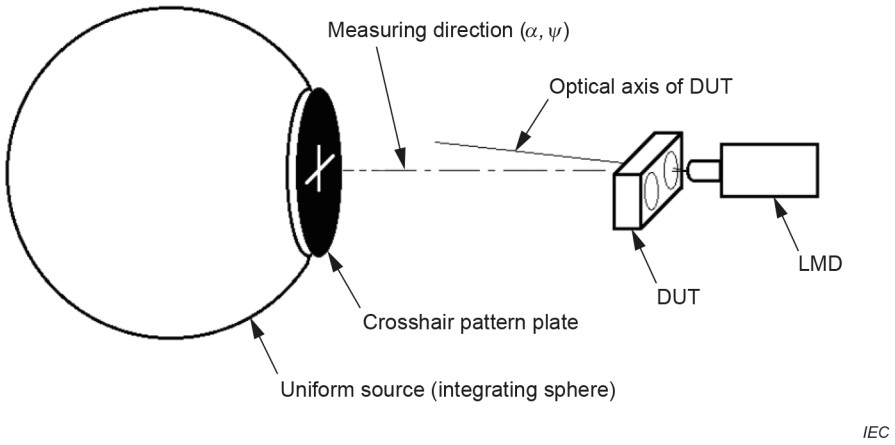

Figure 5 – Example of the setting for a crosshair pattern target

Documents
Document Sharing Hub
Full document details: BS IEC 63145-22-20:2024