BS IEC TR 63401-1:2022

BSI Standards Publication

Dynamic characteristics of inverter-based resources in bulk power systems

Part 1: Interconnecting inverter-based resources to low short circuit ratio AC networks

Documents
Document Sharing Hub

Full document details: BS IEC TR 63401-1:2022

National foreword

This British Standard is the UK implementation of IEC TR 63401-1:2022.

The UK participation in its preparation was entrusted to Technical Committee GEL/8/1.

A list of organizations represented on this committee can be obtained on request to its committee manager.

Contractual and legal considerations

This publication has been prepared in good faith, however no representation, warranty, assurance or undertaking (express or implied) is or will be made, and no responsibility or liability is or will be accepted by BSI in relation to the adequacy, accuracy, completeness or reasonableness of this publication. All and any such responsibility and liability is expressly disclaimed to the full extent permitted by the law.

This publication is provided as is, and is to be used at the recipient's own risk.

The recipient is advised to consider seeking professional guidance with respect to its use of this publication.

This publication is not intended to constitute a contract. Users are responsible for its correct application.

© The British Standards Institution 2022
Published by BSI Standards Limited 2022

ISBN 978 0 539 24843 2

ICS 29.020

Compliance with a British Standard cannot confer immunity from legal obligations.

This British Standard was published under the authority of the Standards Policy and Strategy Committee on 31 December 2022.

Amendments/corrigenda issued since publication

Date	Text affected

Documents
Document Sharing Hub

Full document details: BS IEC TR 63401-1:2022

IEC TR 63401-1

Edition 1.0 2022-11

TECHNICAL REPORT

colour inside

Dynamic characteristics of inverter-based resources in bulk power systems – Part 1: Interconnecting inverter-based resources to low short circuit ratio AC networks

INTERNATIONAL
ELECTROTECHNICAL
COMMISSION

ICS 29.020

ISBN 978-2-8322-6143-9

Warning! Make sure that you obtained this publication from an authorized distributor.

® Registered trademark of the International Electrotechnical Commission

Documents
Document Sharing Hub

Full document details: BS IEC TR 63401-1:2022

CONTENTS

FOREWORD 6
INTRODUCTION 8
1 Scope 9
2 Normative references 10
3 Terms and definitions 10
4 Characteristics of low short circuit ratio AC networks 12
4.1 Definition of low short circuit ratio 12
4.1.1 General 12
4.1.2 Low SCR in IEEE Std 1204-1997 13
4.1.3 Low SCR in CIGRE B4.62 TB671 13
4.2 Stability issues posed by inverter-based resources 15
4.2.1 General 15
4.2.2 Static voltage control 16
4.2.3 Fault ride-through 16
4.2.4 Multi-frequency oscillation 16
4.3 Summary 17
5 Identification of low short circuit ratio AC networks 17
5.1 Problem statement 17
5.2 Short circuit ratio for a single-connected REPP system 18
5.2.1 SCR calculation with fault current 18
5.2.2 SCR calculation with equivalent circuit 19
5.3 Short circuit ratio for multi grid-connected WPP system 26
5.3.1 General 26
5.3.2 Modal decoupling method 27
5.3.3 Circuit aggregation method 38
5.4 Summary 45
6 Steady state voltage stability issue for low short circuit ratio AC networks 47
6.1 Problem statements 47
6.2 Steady state stability analysis method 47
6.2.1 P-V curve 47
6.2.2 Q-V curve 48
6.2.3 Voltage sensitivity analysis 49
6.2.4 Relation to short circuit ratio 54
6.3 Control strategy for inverter-based resource 56
6.3.1 Active power and reactive power control 56
6.3.2 Voltage control 58
6.4 Case study 59
6.4.1 Steady state voltage stability problem – China 59
6.4.2 Low SCR interconnection experience – Vestas 62
6.5 Summary 63
7 Transient issue for low short circuit ratio AC networks 64
7.1 Problem statement 64
7.2 Transient characteristic modelling and analysis 65
7.2.1 Transient stability analysis tools and limitations 65
7.2.2 Electromagnetic transient (EMT) type models 66
7.2.3 Transient stability analysis model requirements 67

AVA Documents
Document Sharing Hub

7.3 Fault ride-through protection and control issue 67
7.3.1 General 67
7.3.2 Hardware protection of inverter-based resource during fault 68
7.3.3 Unbalancing-voltage ride-through issue 71
7.3.4 Overvoltage ride-through control strategy 73
7.3.5 Multiple fault ride-through 75
7.3.6 Under and over -voltage ride-through in time sequence 78
7.3.7 Active/reactive current support of inverter-based resource during fault 79
7.4 Operating experiences 80
7.4.1 Operating experience – China 80
7.4.2 Operating experience 81
7.5 Summary 83
8 Oscillatory instability issue for low short circuit ratio AC networks 83
8.1 Problem statement 83
8.2 Modelling and stability analysis 86
8.2.1 Analysis and modelling of the inverter in the time-domain 86
8.2.2 Analysis and modelling of the inverter in the frequency-domain 86
8.3 Mitigation of the oscillation issues by active damping control 93
8.4 Cases study based on the benchmark model 94
8.5 Summary 99
9 Conclusions 100
Bibliography 101

Figure 1 – Measured voltage and current curves of sub-synchronous oscillation 15
Figure 2 – Schematic diagram of a WPP with no static or dynamic reactive support 19
Figure 3 – Equivalent circuit representation of the WPP shown in Figure 2 20
Figure 4 – A typical SIPES 24
Figure 5 – Changes of system eigenvalues, and the weakest system eigenvalue's damping ratio with SCR in a SIPES 24
Figure 6 – Schematic diagram of a WPP with static reactive support plant (capacitor banks) 25
Figure 7 – Equivalent circuit representation of the WPP shown in Figure 6 25
Figure 8 – Schematic diagram of a WPP with dynamic reactive support plant (synchronous condensers) 26
Figure 9 – Equivalent circuit representation of the WPP shown in Figure 8 26
Figure 10 – Mechanism illustration of decoupling a MIPES into a set of equivalent SIPESs 28
Figure 11 – A typical MIPES 29
Figure 12 – A test wind farm system that contains nine wind turbines 33
Figure 13 – One-line diagram of 5-infeed PES 35
Figure 14 – Eigenvalue comparison of 5-infeed PES and its 5 equivalent SIPESs 36
Figure 15 – The 9-converter heterogeneous system with a IEEE 39-bus network topology 37
Figure 16 – The dominant eigenvalues and the damping ratios 38
Figure 17 – Nearby WPP connected to the same region in a power system 39
Figure 18 – Equivalent representation of multiple windfarms connecting to a power system with its Z matrix 40

AVA Documents
Document Sharing Hub
Full document details: BS IEC TR 63401-1:2022

Figure 19 – Equivalent circuit representation of two WPPs connected to the same connection point-configuration 2 41
Figure 20 – Four WPPs integrated into the system with weak connections 42
Figure 21 – Multiple WPPs connecting to the same HV bus or HV buses in close proximity 43
Figure 22 – Equivalent circuit representation of WPPs connecting to the same HV bus 43
Figure 23 – Approximate equivalent representation assumed for CSCR method 43
Figure 24 – System topology 47
Figure 25 – Typical P-V curve 47
Figure 26 – System topology 48
Figure 27 – Typical Q-V curve 48
Figure 28 – Simplified equivalent circuit of large-scale wind power integration system 49
Figure 29 – Voltage sensitivity at PCC of large-scale wind power integration system 51
Figure 30 – Single generator connected to an infinite bus via grid impedance 52
Figure 31 – P-V curves for a typical generator in a weak grid 53
Figure 32 – Power limit curve of DFIG 58
Figure 33 – Voltage control block diagram of the doubly-fed wind turbine 59
Figure 34 – Network structure of Baicheng grid 59
Figure 35 – Short circuit capacity of Baicheng network 60
Figure 36 – P-V curves and V-Q curves 61
Figure 37 – Reactive power of the wind farm and voltage level at the PCC 62
Figure 38 – Schematic representation of the study system 63
Figure 39 – Fault characteristics 64
Figure 40 – Comparison of VER fault response between transient stability and EMT models 66
Figure 41 – Doubly-fed wind turbine rotor-side crowbar protection circuit topology 69
Figure 42 – Schematic diagram of positive and negative sequence current control of DFIG converter under grid unbalanced fault 72
Figure 43 – Comparative analysis of simulation results 73
Figure 44 – Overvoltage ride-through control flow diagram 74
Figure 45 – Multiple fault conditions 75
Figure 46 – Pitch angle control strategy 76
Figure 47 – Typical characteristics of P_m and P_e under multiple fault ride-through 77
Figure 48 – Characteristics of P_m and P_e under multiple fault ride-through 78
Figure 49 – Under/overvoltage ride-through curve 78
Figure 50 – Circuit diagram in Jiuquan 80
Figure 51 – Analysis of wind power disconnection incident 81
Figure 52 – Demonstration of voltage regulation performance during variable power output conditions 82
Figure 53 – Configuration of a system of multiple grid-tied VSIs 85
Figure 54 – Control schematic diagram and structure of inverter 87
Figure 55 – Frequency coupling in different frequency range 90
Figure 56 – Negative resistor caused by PLL 91
Figure 57 – Negative resistor caused by DVC 92

AVA Documents
Document Sharing Hub

Figure 58 – Equivalent circuits of the LC-filter considering the virtual resistor 93
Figure 59 – Active damping control methods 94
Figure 60 – Impact of virtual resistance control on the stability 95
Figure 61 – Impact of line length on the stability 97
Figure 62 – Impact of PLL on the stability 98
Figure 63 – Impact of current control loop on the stability 99

Table 1 – Rated capacity of PEDs in 5-infeed PES in p.u. 35
Table 2 – Network parameters of 5-infeed PES in p.u. 36
Table 3 – Relationship between equivalent SIPESs and eigenvalues of Y_{eq} in 5-infeed PES 36
Table 4 – Control parameters of converters 37
Table 5 – Wind capacity and SCR values assuming no interaction 42
Table 6 – The definition of different MISCRs 45
Table 7 – Comparison of SCR methods 46
Table 8 – Wind farm's maximum power under different conditions 61
Table 9 – New oscillation issues of power systems in the world 83
Table 10 – Detailed influence frequency ranges of every loop 89
Table 11 – Approximate distribution of high frequency negative damping range 93
Table 12 – Typical cases of weak grid parameters 96

Documents
Document Sharing Hub

Full document details: BS IEC TR 63401-1:2022

INTERNATIONAL ELECTROTECHNICAL COMMISSION

DYNAMIC CHARACTERISTICS OF INVERTER-BASED RESOURCES IN BULK POWER SYSTEMS –

Part 1: Interconnecting inverter-based resources to low short circuit ratio AC networks

FOREWORD

1) The International Electrotechnical Commission (IEC) is a worldwide organization for standardization comprising all national electrotechnical committees (IEC National Committees). The object of IEC is to promote international co-operation on all questions concerning standardization in the electrical and electronic fields. To this end and in addition to other activities, IEC publishes International Standards, Technical Specifications, Technical Reports, Publicly Available Specifications (PAS) and Guides (hereafter referred to as "IEC Publication(s)"). Their preparation is entrusted to technical committees; any IEC National Committee interested in the subject dealt with may participate in this preparatory work. International, governmental and non-governmental organizations liaising with the IEC also participate in this preparation. IEC collaborates closely with the International Organization for Standardization (ISO) in accordance with conditions determined by agreement between the two organizations.
2) The formal decisions or agreements of IEC on technical matters express, as nearly as possible, an international consensus of opinion on the relevant subjects since each technical committee has representation from all interested IEC National Committees.
3) IEC Publications have the form of recommendations for international use and are accepted by IEC National Committees in that sense. While all reasonable efforts are made to ensure that the technical content of IEC Publications is accurate, IEC cannot be held responsible for the way in which they are used or for any misinterpretation by any end user.
4) In order to promote international uniformity, IEC National Committees undertake to apply IEC Publications transparently to the maximum extent possible in their national and regional publications. Any divergence between any IEC Publication and the corresponding national or regional publication shall be clearly indicated in the latter.
5) IEC itself does not provide any attestation of conformity. Independent certification bodies provide conformity assessment services and, in some areas, access to IEC marks of conformity. IEC is not responsible for any services carried out by independent certification bodies.
6) All users should ensure that they have the latest edition of this publication.
7) No liability shall attach to IEC or its directors, employees, servants or agents including individual experts and members of its technical committees and IEC National Committees for any personal injury, property damage or other damage of any nature whatsoever, whether direct or indirect, or for costs (including legal fees) and expenses arising out of the publication, use of, or reliance upon, this IEC Publication or any other IEC Publications.
8) Attention is drawn to the Normative references cited in this publication. Use of the referenced publications is indispensable for the correct application of this publication.
9) Attention is drawn to the possibility that some of the elements of this IEC Publication may be the subject of patent rights. IEC shall not be held responsible for identifying any or all such patent rights.

IEC TR 63401-1 has been prepared by subcommittee SC 8A: Grid integration of renewable energy generation, of IEC technical committee TC 8: Systems aspects of electrical energy supply. It is a Technical Report.

The text of this Technical Report is based on the following documents:

Draft TR	Report on voting
8A/109/DTR	8A/113/RVDTR

Full information on the voting for its approval can be found in the report on voting indicated in the above table.

The language used for the development of this Technical Report is English.

Documents
Document Sharing Hub

Full document details: BS IEC TR 63401-1:2022

This document was drafted in accordance with ISO/IEC Directives, Part 2, and developed in accordance with ISO/IEC Directives, Part 1 and ISO/IEC Directives, IEC Supplement, available at www.iec.ch/members_experts/refdocs. The main document types developed by IEC are described in greater detail at www.iec.ch/standardsdev/publications.

A list of all parts in the IEC 63401 series, published under the general title *Dynamic characteristics of inverter-based resources in bulk power systems*, can be found on the IEC website.

The committee has decided that the contents of this document will remain unchanged until the stability date indicated on the IEC website under webstore.iec.ch in the data related to the specific document. At this date, the document will be

- reconfirmed,
- withdrawn,
- replaced by a revised edition, or
- amended.

IMPORTANT – The "colour inside" logo on the cover page of this document indicates that it contains colours which are considered to be useful for the correct understanding of its contents. Users should therefore print this document using a colour printer.

Documents
Document Sharing Hub

Full document details: BS IEC TR 63401-1:2022

INTRODUCTION

As the penetration of inverter-based energy generating resources increases, huge challenges to all sections of the power system including planning, operation, control, etc. have been created. The impact on the power grid extends from local to the whole power system. New technical solutions are needed to address the different challenges. The solutions will include the new technologies, methods and practices, to provide more flexibility and improve the efficiency of power systems, constantly balancing generation and load.

The purpose of this document (TR) is to specifically focus on information collection from regulatory agencies, including specifying low short circuit ratio AC networks and the challenges they pose for inverter-based resources, and methods, indexes, and characteristics of low short circuit ratio AC networks. This TR addresses renewable energy (RE) integration in low short circuit ratio AC networks, mainly focusing on the technology development trends, best practices of RE grid integration, and future standardization activities.

The aim of this TR is to create a strategic, technically oriented and referenced document, which presents the core and key issues of interconnecting inverter-based resources to low short circuit ratio AC networks. Renewable energy station developers and owners, transmission systems operators need to have a common understanding of the key issues based on practices and challenges between inverter-based resources and AC networks.

Documents
Document Sharing Hub

Full document details: BS IEC TR 63401-1:2022

DYNAMIC CHARACTERISTICS OF INVERTER-BASED RESOURCES IN BULK POWER SYSTEMS –

Part 1: Interconnecting inverter-based resources to low short circuit ratio AC networks

1 Scope

As the use of inverter-based RE power generation resources increases, the use of low short circuit ratio AC networks is becoming more common. Considering the advantages of short circuit ratio in stability analysis, the low short circuit ratio is an important indication for describing weak AC networks. This document focuses on technologies and standardization aspects of interconnecting inverter-based resources to low short circuit ratio AC networks. A clear definition of low short circuit ratio AC networks with or without a high proportion of inverter-based resources and the calculation method is described. The adaptability of traditional modelling and analytical method for low short circuit ratio AC networks are discussed. Some new characteristics and challenges will be re-examined, and some adapted control strategies will be studied. This document covers the following major aspects.

In terms of defining a weak AC network, for example the (X/R) ratio, voltage sensitivity, system inertia and the short circuit ratio (SCR) are important characteristics. The definition of low short circuit ratio AC networks in IEEE Std 1204™-1997 [1][1] and in CIGRE B4.62 TB671 [2] is used. Some stability challenges for inverter-based resources in a low short circuit ratio AC network (SCR AC) will be analyzed. There are stability challenges in a low short circuit ratio (SCR) AC network, typically complex static voltage control, risk of failure in fault ride-through situations, strong control interactions and instability.

In terms of identification of low short circuit ratio (SCR) AC networks, some short circuit ratio -like index for various applications is introduced. A wind power plant (WPP) is a power station consisting of a batch of wind turbines or groups of wind turbines, collection lines, main step-up transformers and other equipment. For a single grid-connected WPP system, a fault current based calculation method and an equivalent circuit based calculation method are introduced to make an SCR calculation possible for any given WPP and network topology. For multi grid-connected WPP systems, eigenvalue decomposition based generalized short circuit ratio (gSCR) is then proposed and compared against other approaches referred to as equivalent short circuit ratio (ESCR), composite short circuit ratio (CSCR), and weighted short circuit ratio (WSCR).

In terms of large scale inverter-based resources integration, the steady-state stability analysis methods, including the P-V curve, Q-V curve, and voltage sensitivity analysis, are illustrated. The conventional control strategies of the renewable energy sources are explained. An adaptive controller designed for the photovoltaic (PV) panels, which can maximize the power output capability of PV stations under weak-grid conditions, is presented. Finally, the steady-state voltage stability problem in China that happened recently is illustrated.

[1] Numbers in square brackets refer to the Bibliography.

Documents
Document Sharing Hub

Full document details: BS IEC TR 63401-1:2022

In terms of the transient state stability issue for low short circuit ratio AC networks after large scale inverter-based resources integration, related issues and phenomena that occur need to be discussed. Undervoltage ride-through (UVRT), overvoltage ride-through (OVRT) and multiple fault ride-through occur easily in a low SCR AC network, which bring risk of failure to fault ride-through. Electromagnetic transient simulations to supplement positive sequence root-mean-square (RMS) simulations are described, and shortfalls of the RMS models and how to identify them in simulations are considered.

In terms of the oscillatory stability issue for low short circuit ratio AC networks after large scale inverter-based resources integration, the impedance-based method is used to analyze the system stability. For the inverter modelling, three typical inverter models are established, including: a) only considering the current controller (CC); b) considering CC and phase-locked loop (PLL); c) considering CC, PLL and voltage controller (VC). Relying on the impedance analysis method, the effect of PLL, CC, number of inverters, SCR of AC grid is discussed. Finally, the additional active damping control method is proposed for suppressing the oscillation phenomenon.

This document discusses the challenges of connecting inverter-based resources to low short circuit ratio AC networks, key technical issues and emerging technologies. There are the steady-state stability issue, transient state stability issue, and oscillatory stability issue, which are the most distinct differences compared to inverter-based resources or traditional generators, and accordingly brings new challenges to operation, control, protection, etc. Therefore, technical solutions are needed. The potential solutions will include new technologies, methods and practices, in order to provide more flexibility and improve the efficiency of power systems. It is expected that this document can also provide guidance for further standardization on relevant issues.

2 Normative references

The following documents are referred to in the text in such a way that some or all of their content constitutes requirements of this document. For dated references, only the edition cited applies. For undated references, the latest edition of the referenced document (including any amendments) applies.

IEC 62934, *Grid integration of renewable energy generation – Terms and definitions*

3 Terms and definitions

For the purposes of this document, the terms and definitions given in IEC 62934 and the following apply.

ISO and IEC maintain terminological databases for use in standardization at the following addresses:

- IEC Electropedia: available at http://www.electropedia.org/
- ISO Online browsing platform: available at http://www.iso.org/obp

3.1
renewable energy
RE
primary energy, the source of which is constantly replenished and will not become depleted

Note 1 to entry: Examples of renewable energy are: wind, solar, geothermal, hydropower, etc.

Note 2 to entry: Fossil fuels are non-renewable.

[SOURCE: IEC 60050-617:2009, 617-04-11]

Documents
Document Sharing Hub

Full document details: BS IEC TR 63401-1:2022

3.2
inverter
electric energy converter that changes direct electric current to single-phase or polyphase alternating currents

[SOURCE: IEC 60050-151:2001, 151-13-46]

3.3
point of common coupling
PCC
point in an electric power system, electrically nearest to a particular load, at which other loads are, or may be, connected

Note 1 to entry: These loads can be either devices, equipment or systems, or distinct customer's installations

[SOURCE: IEC 60050-614:2016, 614-01-12]

3.4
short circuit current of renewable energy power plant
current that a renewable energy power plant delivers to the point of connection resulting from a short circuit in the external electric power system

3.5
short circuit ratio
SCR
ratio of the three-phase short circuit power at PCC to the nominal active power of a renewable energy power plant or generating unit

Note 1 to entry: SCR is a common analytical indicator used in the industry to quantify system strength.

Note 2 to entry: There is no industry consensus on the exact definition and methodology for calculating the SCR, particularly for applications with several adjacent renewable energy power plants, or for a renewable energy power plant adjacent to HVDC terminals, see CIGRE B4.62 TB 671 [2].

3.6
voltage dip
sudden voltage reduction at a point in an electric power system, followed by voltage recovery after a short time interval, from a few periods of the sinusoidal wave of the voltage to a few seconds

[SOURCE: IEC 60050-614:2016, 614-01-08]

3.7
fault ride-through
FRT
ability of a generating unit or power plant to stay connected during specified faults in the electric power system

3.8
electrical simulation model
set of mathematical formulae or logical functions used in time or frequency domain digital simulations which describe the dynamic characteristics of a facility or certain equipment

3.9
electromechanical simulation
RMS simulation
dynamic simulation method based on the RMS model, which usually focuses on the electromechanical processes of the electric power system under disturbance, and where the typical observation time interval is from several seconds to tens of seconds after disturbance

AVA Documents
Document Sharing Hub

Full document details: BS IEC TR 63401-1:2022

3.10
electromagnetic transient simulation
EMT simulation
dynamic simulation method to model the electromagnetic transient behaviour of an electric power system, where instantaneous values are used in the process, and the typical observation time interval is from several microseconds to several seconds after a disturbance

3.11
steady state stability
ability of generators in a system to keep operating synchronously and transit to a new stable operating state or recover to the original stable operating state under a small power system disturbance

3.12
transient stability
ability of generators in a system to keep running synchronously and transit to a new stable operating state or recover to the original stable operating state under a large power system disturbance

3.13
sub-synchronous oscillation
electrical oscillation occurring in an electric power system at a frequency smaller than the nominal system frequency and generally sustained for a minute or more

3.14
sub-synchronous resonance
resonance between adjacent equipment in an electric power system, generating oscillations at a frequency smaller than the nominal system frequency and generally sustained for a minute or more

3.15
low-frequency oscillation
electrical oscillation occurring in an electric power system at a frequency usually between 0,1 Hz and 3 Hz

Note 1 to entry: According to an extensive survey of IEEE technical literature, the range 0,1 Hz to 3 Hz covers the majority of low-frequency oscillation events.

4 Characteristics of low short circuit ratio AC networks

4.1 Definition of low short circuit ratio

4.1.1 General

The strength of a power system is a metric used to describe the ability of a power system to maintain the core characteristics through which it interacts with a connection, namely voltage and frequency, as steadily as possible, under all operating conditions. The strength or weakness of a power system is a relative concept and needs to be addressed both in terms of the system characteristics at a given connection point as well as the size of renewable energy to be connected to the connection point.

As indications of system strength, the (X/R) ratio of the system impedance seen from the connection point and the concept of available fault level have also been used. The ability to stably transfer power over a weak transmission system, from a renewable energy station connecting point to stronger parts of a network (where generally the load is) has been quantified by using the sensitivity of the connection point's voltage to the active and reactive power outputs of the renewable energy station. The maximum stable power transfer capability has been derived, providing an insight for renewable energy station designers of the potential issues to be anticipated when power transfer reaches the maximum transfer limits.

Documents
Document Sharing Hub
Full document details: BS IEC TR 63401-1:2022

Short circuit ratio (SCR), which is a commonly used metric for quantifying the relative power system impedance seen from a connection point, is an important indication of the strength of AC networks. The SCR seen by a generator strongly influences its ability to operate satisfactorily both in steady state and after system disturbances. While this is a very powerful and simple concept, extending its use to describe the shared impedance seen by multiple renewable energy power plants (REPPs) connecting to the same part of a network, electrically close to each other, or close to other power electronic plants such as HVDC converters, has not been unified across the industry.

4.1.2 Low SCR in IEEE Std 1204-1997

SCR is a widely used index for assessment of the strength of the connection point for HVDC links, and in particular for the line current commutated (LCC) and capacitor commutated converter (CCC) technologies. For an HVDC link it is defined as the ratio of fault level at the connection point to the nominal output active power of the link. It is commonly used at the planning stage to give an idea of the likely issues caused by integration of the HVDC link into the network. The SCR seen by a generator strongly influences its ability to operate satisfactorily both in steady state and following system disturbances. While this is a very powerful and simple concept, extending its use to describe the shared impedance seen by multiple REPPs connecting to the same part of a network, electrically close to each other, or close to other power electronic plant such as HVDC converters, has not been unified across the industry.

The SCR can be often obtained from the following formula:

$$SCR = \frac{S}{P_{\mathrm{N}}} \tag{1}$$

where

S is the AC system three-phase symmetrical short circuit level in megavolt-amperes (MVA) at the convertor terminal AC bus with 1,0 p.u. AC terminal voltage;

P_{N} is the rated AC power in megawatts (MW).

Based on that definition and on typical inverter characteristics (such as the value of the convertor transformer reactance), the following SCR values can be used to classify an AC/DC system:

- a high SCR AC/DC system is categorized by a SCR value greater than 3;
- a low SCR AC/DC system is categorized by a SCR value between 2 and 3;
- a very low SCR AC/DC system is categorized by a SCR value lower than 2.

4.1.3 Low SCR in CIGRE B4.62 TB671

Compared to an HVDC link, a WPP has a significantly more complex topology due to the use of several wind turbines (which may or may not be identical), and the common use of static reactive support plants such as capacitor banks and dynamic reactive support plants such as STATCOMs and synchronous condensers. Additionally, it sometimes happens that several REPPs are located adjacent to each other, or even sometimes connected to the same connection point. This makes it imperative to evaluate the impact of all connected REPPs. The two aspects addressed above are difficult to account for using the conventional calculation method for the SCR. To make it applicable to any given REPP and network topology, an equivalent circuit based calculation method (ESCR) is proposed as elaborated below for various configurations. For multi REPP applications results obtained from this approach will then be compared against two other approaches referred to as composite short circuit ratio (CSCR) and weighted short circuit ratio (WSCR).

1) Composite short circuit ratio (CSCR)

Documents
Document Sharing Hub

Full document details: BS IEC TR 63401-1:2022

Index based on short circuit ratio, which calculates an aggregate SCR for multiple renewable energy power plants by creating a common bus and tying all renewable energy power plants of interest together at that common bus.

The CSCR can be obtained from the following formula:

$$CSCR = \frac{S_{\text{kv}}}{\sum_{i=1}^{N} P_{ni}} \tag{2}$$

where

S_{kv} is the short circuit power at the virtual common bus without current contribution from the renewable energy power plants;

P_{ni} is the nominal power of renewable energy power plant i;

N is the number of the renewable energy power plants to be considered.

Composite short circuit ratio is used to estimate the equivalent system impedance seen by multiple renewable energy power plants.

2) Weighted short circuit ratio (WSCR)

Another appropriate index for the calculation of impact of adjacent REPPs is the weighted short circuit ratio (WSCR), defined by:

$$WSCR = \frac{\sum_{i=1}^{N} S_{\text{SCMVA}i} \times P_{\text{RMW}i}}{(P_{\text{RMW}i})^2} \tag{3}$$

where

$S_{\text{SCMVA}i}$ is the short circuit capacity at bus i before the connection of REPPi;

$P_{\text{RMW}i}$ is the MW rating of renewable energy station i to be connected;

N is the number of REPPs fully interacting with each other;

i is the renewable energy station index.

The proposed WSCR calculation method is based on the assumption of full interactions between renewable energy stations. This is equivalent to assuming that all renewable energy stations are connected to a virtual POI. For a real power system, there is usually some electrical distance between each renewable energy station's POI and the renewable energy stations will not fully interact with each other. The WSCR obtained with this method gives a conservative estimate of the system strength.

Based on experience obtained from commissioning, field testing, and comparison of RMS-type models against the detailed EMT-type models, the following classification is proposed when dealing with REPPs connected to weak points in the network.

a) Connection is considered to be weak if SCR at the POI is less than 5 or if SCR at the medium voltage collection grid is less than 4 (whichever of these criteria are met).

b) Connection is considered to be very weak if SCR at the POI is less than 3 of if SCR at the medium voltage collection grid is less than 2 (whichever of these criteria are met).

AVA Documents
Document Sharing Hub

Full document details: BS IEC TR 63401-1:2022

c) For applications with multiple REPPs, it is suggested to use the minimum value obtained from ESCR, CSCR and WSCR indices.

4.2 Stability issues posed by inverter-based resources

4.2.1 General

Low short circuit ratios may raise some instability issues in existing bulk electric systems, and the challenges this poses for inverter-based resources need to be considered in low SCRAC networks.

The example of Xinjiang power grid in China, where most wind farms are located near substations Mahuanggou east and Mahuanggou west, is presented. In these wind farms, many identical 1,5 MW direct-drive PMSGs have been deployed. These large-scale wind farms are far from the main power grid. According to the data provided by the grid company, the short circuit capacities at substation Mahuanggou west and Mahuanggou east are about 2 000 MVA and 1 450 MVA. However, the total installed wind power capacity at substation Mahuanggou east and Mahuanggou west was about 1 100 MVA at the end of 2014 and is still growing. Thus the SCR is about 1,3 or even less. In other words, these PMSG based wind farms are radially connected to a typical low SCR AC network.

In 2014, the wind power cluster in Kumul, Xinjiang, Northwest China had several accidents, where a great number of wind turbines tripped off due to the power oscillations of the power grid. Based on the PMU data, it was found that there was a sub-synchronous oscillation problem in the power grid of the Mahuanggou area. At the same time, the dynamic reactive power compensation device deployed in the region is affected by the sub-synchronous oscillation during the operation and the output power oscillation and amplification phenomenon, which seriously affects the safe and stable operation of the power grid in the Mahuanggou area.

The field recording shows that the output of the dynamic reactive power compensation device in the oscillating state has a certain regularity in Figure 2. It is found that the dynamic reactive power compensation device has an oscillation period of 40 ms when operating in the oscillation state. According to this analysis, there is a sub-synchronous oscillation of 25 Hz in the power grid. The test results show that there is a sub-synchronous oscillation of 25 Hz in the power grid of the Mahuanggou area. The sub-synchronous oscillation is a new oscillation type because of strong interactions among power electronics. The fault threatens the safe and stable operation of the power system.

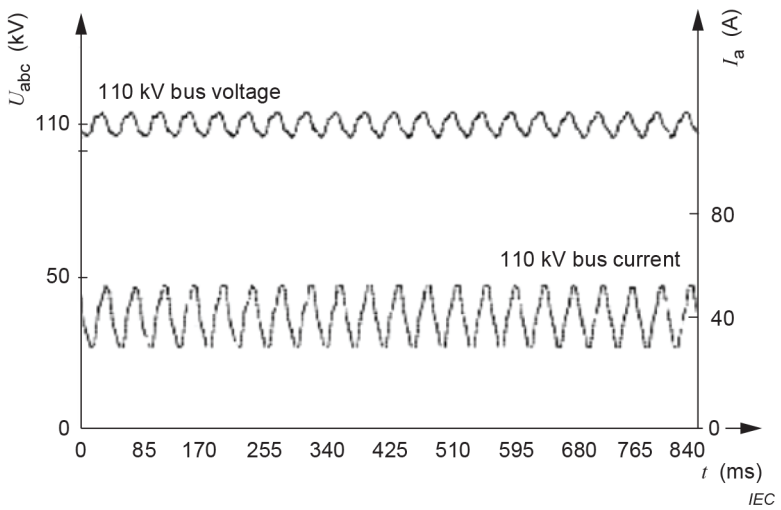

Figure 1 – Measured voltage and current curves of sub-synchronous oscillation

Documents
Document Sharing Hub
Full document details: BS IEC TR 63401-1:2022

In order to improve the stability in the low SCR AC network, the understanding of the fault inherent mechanism is very important. The strong interactions among the wind generators, dynamic reactive power compensation device, power grid and related control strategies are the critical elements of the faults in the low SCR AC network with high proportion of inverter-based resources.

4.2.2 Static voltage control

Voltage sensitivity is very high in a low SCR AC network. With regard to renewable energy generation connected to a low short circuit ratio AC grid, small variations of active or reactive power output might bring relatively large voltage fluctuation at PCC, and the stability also might be deteriorated, which could be represented by a low stability margin.

The indication of SCR can describe the system's ability to respond to active/reactive power injections and absorptions. A low SCR system is very sensitive to active/reactive power injections (or absorptions) i.e., the system voltage changes rapidly as the amount of reactive power injected (or absorbed) changes. It is therefore difficult to stabilize the system voltage (magnitude and phase angle) in a low SCR system whereas a high SCR system is largely unresponsive to active and reactive power injections (and absorptions) and the system voltage is not significantly influenced by changes in the network. A low SCR network generally requires a voltage control system with supplementary stabilization control.

4.2.3 Fault ride-through

Renewable energy generation plants may be unable to adequately meet ride-through criteria as defined by regulatory agencies. This can manifest in several ways, but failure of the plant to regulate its terminal voltage adequately as the plant recovers its active power following a disturbance can cause the plant protections to operate inappropriately and fail to "ride-through". Further, when connected to low SCR AC networks, the ability of the controllers to adequately follow the connection point system frequency and phase immediately after a fault, is reduced significantly, causing the disconnection of the REPPs from the system.

The risk of exceeding the connection point voltage following the clearance of the faults is increased. Depending on overvoltage ride-through (OVRT) capability of individual renewable energy generation plant designs compared to others, operation of renewable energy generation plant overvoltage relays may occur upon outage conditions, especially in regions dominated by inverter based generation types like wind, with very little load or conventional generators. Loss of a plant through OVRT protection can relieve loading on the overvoltage circuits exporting the power, causing the voltage to rise further, and potentially leading to overvoltage cascading, as the system voltage rises further when generation trips.

In a low SCR network, the renewable energy generation plants may have difficulty transitioning from a reduced-power ride-through mode into its normal full power operation. The transient caused by the plant recovery and shift from control modes may be sufficient to cause the plant to re-enter its ride-through mode, causing a major transient to occur in a periodic manner. This is generally unacceptable, as the transients can be severe and can ultimately lead to plant tripping.

4.2.4 Multi-frequency oscillation

The possibility of interaction between devices is very broad. Power electronic based generators may interact with each other, or they may interact with other power electronic devices such as HVDC ties, FACTS devices such as SVCs or STATCOMs, or even with non-power electronic based devices such as series capacitors, switched shunt devices and conventional generators. Further, control instability can occur due to the interaction of the fast, high gain controllers of power electronic devices.

Documents
Document Sharing Hub
Full document details: BS IEC TR 63401-1:2022

The weaker a system in relation to the controlled devices, the more impact of each of the devices. In general, the effect of the open loop gain as experienced by the interacting controllers is higher when they are connected and operated in weak AC systems. In power systems several phenomena are known to cause undamped or growing oscillations, and the interaction between devices and weak AC networks would cause an under damped sub-synchronous interaction (SSI) mode. Under some conditions, especially with very small short circuit ratios, the SSI can become unstable, and this causes sustained oscillations in power electronic devices as well as the whole associated grid.

4.3 Summary

With the continuous growth of installed renewable energy from inverters, large-scale connections to weak grids are becoming more common. Generally, many indications can be used to evaluate the transmission system robustness, for example the (X/R) ratio, voltage sensitivity, system inertia and so on. The short circuit ratio (SCR) is an important indication of weak AC networks, which is of importance in system stability analysis. A low SCR system usually means a weak system. There are some definitions of low short circuit ratio, but they have not been unified across the industry. At the same, in a low SCRAC networks, the static voltage controls become more complicated, the risk of failure of fault ride-through of renewable energy generation increases, the interaction between devices becomes stronger, and the risk of oscillation instability is increased.

5 Identification of low short circuit ratio AC networks

5.1 Problem statement

Connection of significant amounts of wind power to constrained power networks can result in system stability concerns, which manifest differently from those with conventional generation based on synchronous generators. Operation of the wind power plants (WPPs) under weak network could result in system and/or wind turbine converter control instabilities. Some of the interactions between transmission assets and WPPs are complex and thus special studies are needed to determine wind turbine generator (WTG) responses to such conditions. The use of simple indices for determining the likelihood of weak network conditions would be a logical step before embarking on detailed power system modelling and analysis.

In theoretical research and engineering application, short circuit ratio (SCR) is widely applied to quantitatively measure the strength of AC networks. A higher SCR leads to a stronger AC network and a more stable power system, and vice versa. The SCR has been used to assess the static voltage stability of AC-DC systems. This assessment involves two indices: the critical SCR (SCR_c) and the boundary SCR (BSCR). Usually, SCR_c≈2 is used to differentiate very weak systems from weak systems based on IEEE Standard 1204-1997. BSCR≈3 is used to differentiate weak systems from strong systems. The SCR is an indication of the AC-DC system's ability to respond to active/reactive power injections and absorptions. A low SCR (weak) system is very sensitive to reactive power injections (or absorptions). That is, the system voltage changes rapidly as the amount of reactive power injected (or absorbed) changes. Thus, it is challenging to stabilize the system voltage in a weak system. On the other hand, a high SCR (strong) system is largely insensitive to reactive power injections (or absorptions), and thus the system voltage is not significantly influenced by changes in reactive power. A weak system generally requires a voltage control system with supplementary stabilization control.

Documents
Document Sharing Hub

Full document details: BS IEC TR 63401-1:2022

Compared to an HVDC link, an AC network integrated with multiple WPPs has a significantly more complex topology due to the use of several wind turbines (which may or may not be identical), and common use of static reactive support such as capacitor bank and dynamic reactive support such as STATCOMs and synchronous condensers. Moreover, it sometimes happens that several WPPs are located adjacent to each other, or even sometimes connected to the same connection point. This makes it imperative to appreciate the impact of all the neighbouring WPPs. The two aspects addressed above are difficult to account for using a conventional calculation method for the SCR. For a single grid-connected WPP system, a fault current based calculation method and an equivalent circuit-based calculation method are introduced to make SCR evaluation applicable to any given WPP and network topology. For a multi grid-connected WPP system, a generalized short circuit ratio (gSCR) is proposed based on eigenvalue decomposition in Clause 5 and compared against other approaches referred to as equivalent short circuit ratio (ESCR), composite short circuit ratio (CSCR), and weighted short circuit ratio (WSCR).

Without a loss of generality, the network line impedance ratio R/X is assumed to be constant and the effect of capacitance in the network is ignored. As for a WPP or WPPs, the problems discussed in this document are as follows:

a) Problem 1: Assuming that all the WPPs operate in the rated condition, how to identify whether or not the system meets the small signal stability and quantify the stability margin of the system using the gSCR.

b) Problem 2: How to understand the influence of network structure and parameters on the small signal stability of the WPPs based on the gSCR and how to evaluate the gSCR and its critical value CgSCR.

It is noted that the gSCR can be promoted by the operational gSCR for the system operating in non-rated conditions. It is worth pointing out that the gSCR-based analysis method is still applicable under these conditions, and this document will not discuss this method in detail due to space limitations.

5.2 Short circuit ratio for a single-connected REPP system

5.2.1 SCR calculation with fault current

To correctly determine the SCR, it is imperative to first calculate the fault current at the desired location, where WPPs are part of a larger power system, and hand calculations are not practicable. Short circuit calculation engines embedded into RMS-type power system simulation tools are often used for this purpose. At present, most of these tools treat wind turbines in the same fashion as synchronous generators. This would result in an overestimation of the fault current at the given point due to significantly higher fault current contribution from the synchronous generators than WPPs. Efforts are on-going in the industry to integrate appropriate fault current calculations algorithms into the RMS-type simulation tools to account for the true response of power electronic converters in the wind turbines. In the absence of such methods the following assumptions are proposed:

a) Type 1 and Type 2 wind turbines: no contribution (mentioned in CIGRE Tech. Brochure 671)

b) Type 3 and Type 4 wind turbines: 1 p.u. contribution

Type 1 and Type 2 wind turbines can therefore be removed for fault current calculations.

Type 3 and Type 4 wind turbines can be represented by fictitious synchronous generators with a fault current contribution of 1 p.u., i.e. full load current, at the turbine terminals. To this end, the transient and sub-transient reactance of the fictitious synchronous generators can be adjusted.

Documents
Document Sharing Hub

Full document details: BS IEC TR 63401-1:2022

The following considerations should be accounted for when performing fault current calculation studies, and consequently determining the short circuit ratio:

a) Contingency conditions

It is recommended to estimate the fault level for both normal and contingency operating conditions. It is expected that the WPP will maintain its continuous uninterrupted operation for normal and credible contingency conditions. Investigating non-credible contingencies is primarily to identify the need for imposing operational constraints under such conditions. Depending on the connection agreement between the WPP owner and network owner/operator, a WPP may or may not be required to sustain non-credible contingency conditions.

b) Conventional generation dispatch

Fault level calculations should include the lowest realistic unit commitment condition of electrically close conventional synchronous generators. For planning and feasibility studies, this should include the potential retirement/mothballing of synchronous generators.

c) Number of WPPs to consider

All WPPs electrically close to the plant of interest should be considered in the calculation. A practical rule is that if adding a WPP to the calculation does not change the result, the plant can be neglected.

d) HVDC links and other power electronic devices

HVDC links and other power electronic interfaced technologies such as SVCs and STATCOMs in close proximity of WPPs should be included in the calculations of short circuit ratio.

5.2.2 SCR calculation with equivalent circuit

5.2.2.1 Equivalent circuit-based short circuit ratio (ESCR)

A simple schematic diagram of a WPP without any static and dynamic reactive support is shown in Figure 2. The WPP consists of N number of wind turbines, where the cable impedance represents the aggregate impedance of the cables for all those individual wind turbines. For simplicity only one level of voltage transformation is assumed from the MV level collection grid to the connection point. The approach presented here can be readily applied to WPP with two levels of high voltage transformations.

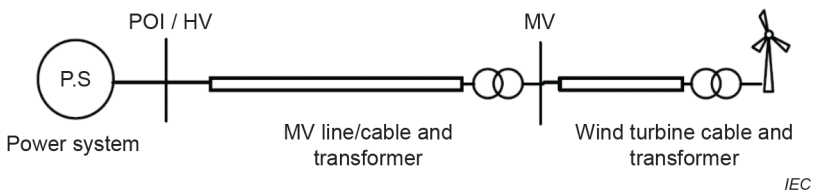

Figure 2 – Schematic diagram of a WPP with no static or dynamic reactive support

An equivalent single-phase equivalent circuit of this simple WPP is shown in Figure 3.

Documents
Document Sharing Hub
Full document details: BS IEC TR 63401-1:2022

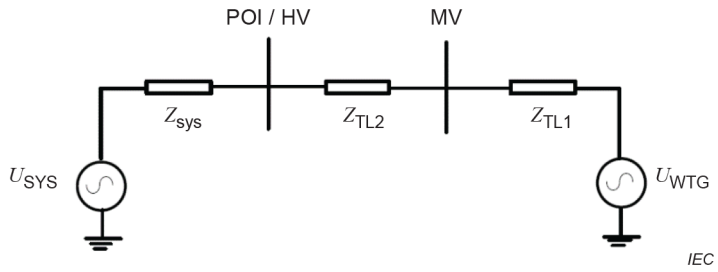

Figure 3 – Equivalent circuit representation of the WPP shown in Figure 2

The electrical network impedance is considered to be known where

Z_{TL1}: aggregate impedance of the wind turbine transformer and cable;

Z_{TL2}: aggregate impedance of the MV transformer and cable;

Z_{sys}: equivalent impedance of the system.

According to the basic definition of the short circuit ratio, SCR at the point of interconnection (POI) with the rated capacity of wind turbine (P_{WF}) can be written as:

$$SCR_{POI} = \frac{S_{POI}}{P_{WF}} \tag{4}$$

Rearranging this formula:

$$S_{POI} = SCR_{POI} \times P_{WF} \tag{5}$$

Substituting voltage (V_{POI}) and impedance (Z_{POI}) at POI for S_{POI}:

$$\frac{V_{POI}^2}{Z_{POI}} = SCR_{POI} \times P_{WF} \tag{6}$$

The per-unit impedance seen at the POI can be defined as:

$$Z_{pu,POI} = \frac{Z_{POI}}{Z_{base}} \tag{7}$$

where

$$Z_{base} = \frac{V_{POI}^2}{P_{WF}} \tag{8}$$

Documents
Document Sharing Hub
Full document details: BS IEC TR 63401-1:2022

Substituting (7) and (8) to (6) results in:

$$SCR_{\text{POI}} = \frac{1}{Z_{\text{pu,POI}}} \tag{9}$$

This formula shows that the SCR at the POI can be calculated as the inverse of the per-unit impedance seen at the POI. For example, with $Z_{\text{pu,POI}} = 20\%$ the SCR at the POI will be 5.

The used impedance should reflect the maximum grid impedance under which the WPP is expected to operate under normal conditions.

Note that these formulae do not account for the variation of POI voltage. Further formulae will be developed by relating the SCR to steady-state voltage stability indices.

5.2.2.2 Composite short circuit ratio (CSCR)

This method primarily aims at calculating short circuit ratio at the WPP MV collection grid. Using a system base power S_{BASE} for the calculation, for example S_{BASE} = 100 MVA, the equivalent system reactance can be estimated as follows:

$$X_{\text{SYSTEM}} = \frac{S_{\text{BASE}}}{S_{\text{SC}}} \tag{10}$$

The composite short circuit level at the medium voltage collector bus CS_{SCMV} can be estimated as:

$$CS_{\text{SCMV}} = \frac{1}{(X_{\text{SYSTEM}} + X_{\text{TL2}})} \tag{11}$$

where

X_{TL2} is the HV to MV transformer impedance in p.u. on the system MVA base.

The CSCR can then be calculated as:

$$CSCR = \frac{CS_{\text{SCMV}} \times S_{\text{BASE}}}{WP_{\text{RAT}}} \tag{12}$$

where

WP_{RAT} is the nominal MVA base rating of the WPP.

In a more general approach, CS_{SCMV} could be calculated with a short circuit program by estimating the three-phase fault level at the medium voltage bus. The calculation should assume no short circuit contribution from the WPP of interest, and take into account the approach elaborated in 5.2.2 as to how to account for contribution of remote WPPs in the network. The CSCR can then be calculated as indicated in (12).

AVA Documents
Document Sharing Hub

In this case with a single WPP there is no distinction between the short circuit level at the medium voltage collector bus and the composite short circuit level at the same bus. Thus, CSCR and ESCR indices will give rise to identical SCR figures for a single WPP.

5.2.2.3 Generalized short circuit ratio (gSCR)

A typical single-infeed power electronic system (SIPES) is shown in Figure 4, in which a power electronic device (PED) such as a WPP is connected to the infinite bus through the inductance. In the SIPES, it is assumed that the small signal stability of the PED can be improved when the inductance L decreases, i.e., the grid strength is improved. This assumption is valid for a SIPES with most commonly-used types of PEDs, such as the wind turbines or vector control scheme. The strength of the infeed bus connecting PED to the AC grid can be assessed by the SCR:

$$SCR = \frac{S_{\mathrm{ac}}}{S_{\mathrm{B}}} = \frac{U_{\mathrm{N}}^{2}}{Z} \times \frac{1}{S_{\mathrm{B}}} = \frac{1}{S_{\mathrm{B}} Z} = \frac{B}{S_{\mathrm{B}}} \tag{13}$$

where

$Z = 1/B$ is the reactance connecting the PED with the AC grid;

U_{N} is the rated voltage at the infeed bus in the AC grid.

In the SIPES, the small signal stability can be analyzed based on the impedance-based model, which can be constructed by the linearized equations of currents and voltages at the PED and AC grid sides, respectively.

At the AC grid terminal, the linearized equations in the s-domain can be represented as:

$$\begin{bmatrix} \Delta I_x \\ \Delta I_y \end{bmatrix} = \boldsymbol{Y}_{\mathrm{net_s}}(s) \begin{bmatrix} \Delta U_x \\ \Delta U_y \end{bmatrix} = B \begin{bmatrix} \beta(s) & \alpha(s) \\ -\alpha(s) & \beta(s) \end{bmatrix} \begin{bmatrix} \Delta U_x \\ \Delta U_y \end{bmatrix} \tag{14}$$

where

ΔI_x and ΔI_y are the x-axis and y-axis components of the changes of the injected current ΔI in the x-y global reference frame;

ΔU_x and ΔU_y are the x-axis and y-axis components of the changes of the terminal voltage ΔU in the x-y global reference frame;

$\boldsymbol{Y}_{\mathrm{net_s}}(s)$ is the admittance matrix of the AC grid, in which $\alpha(s) = \omega_0^2 / (s^2 + \omega_0^2)$, $\beta(s) = s\omega_0^2 / (s^2 + \omega_0^2)$ in the frequency domain (i.e., s-domain), and $B = 1/(\omega_0 L)$;

ω_0 is the rated angular frequency of AC system.

At the PED terminal, the linearized equations of currents and voltages in the s-domain on the rated operational point can be represented as:

$$\begin{bmatrix} \Delta I_d \\ \Delta I_q \end{bmatrix} = -\boldsymbol{Y}_{\mathrm{PED_s}}(s) \begin{bmatrix} \Delta U_d \\ \Delta U_q \end{bmatrix} = -S_{\mathrm{B}} \begin{bmatrix} G_{\mathrm{dd}}(s) & G_{\mathrm{dq}}(s) \\ G_{\mathrm{qd}}(s) & G_{\mathrm{qq}}(s) \end{bmatrix} \begin{bmatrix} \Delta U_d \\ \Delta U_q \end{bmatrix} \tag{15}$$

Documents
Document Sharing Hub
Full document details: BS IEC TR 63401-1:2022

where

G_{dd}, G_{dq}, G_{qd}, and G_{qq} are the port input-output transfer functions of the PED, which describe the current response to voltage perturbation;

ΔI_d and ΔI_q are the d-axis and q-axis components of the changes of the current I in the d-q local reference frame of the PED.

In (15), the components of the output current and terminal voltage are represented in the d-q local reference frame due to the control blocks such as Phase-Locked Loop (PLL) controller in a PED. To integrate (14) and (15) for small signal stability analysis of the SIPES, the d-q components in (15) are transformed into their corresponding components in the x-y global reference frame using the relationship between local and global reference frames, where it is assumed that the d-axis is aligned with the terminal voltage $\vec{U} = U\angle\theta$ of the PED in steady-state operation point. With the relationship between two reference frames, (15) can be reformulated as:

$$\begin{bmatrix} \Delta I_x \\ \Delta I_y \end{bmatrix} = -\boldsymbol{Y}_{\text{PEDxy_s}}(s)\begin{bmatrix} \Delta U_x \\ \Delta U_y \end{bmatrix} \tag{16}$$

where

$$\boldsymbol{Y}_{\text{PEDxy_s}}(s) = \boldsymbol{T}^{-1}\boldsymbol{Y}_{\text{PED_s}}(s)\boldsymbol{T},\ \ \boldsymbol{T} = \begin{bmatrix} \cos\theta & \sin\theta \\ -\sin\theta & \cos\theta \end{bmatrix} \tag{17}$$

Based on (14) and (16), the SIPES shown in Figure 4 can be represented with an equivalent multiple-input, multiple-output (MIMO) feedback control system for the small signal stability analysis. In the control system, return deference matrix can be represented as $\left(\boldsymbol{I} + \boldsymbol{Y}_{\text{PEDxy_s}}(s)\boldsymbol{Y}_{\text{net_s}}^{-1}(s)\right)$. Thus, the close-loop characteristic formula of the control system is:

$$\det\left(\boldsymbol{I} + \boldsymbol{Y}_{\text{PEDxy_s}}(s)\boldsymbol{Y}_{\text{net_s}}^{-1}(s)\right) = 0 \tag{18}$$

where

$\boldsymbol{I}$ is a 2-by-2 identity matrix and det(·) denotes the determinant function.

Submitting (13) into (18) leads to

$$c(s) = \det\left(\begin{bmatrix} G_{\text{dd}}(s) & G_{\text{dq}}(s) \\ G_{\text{qd}}(s) & G_{\text{qq}}(s) \end{bmatrix} + SCR\begin{bmatrix} \beta(s) & \alpha(s) \\ -\alpha(s) & \beta(s) \end{bmatrix}\right) = 0 \tag{19}$$

Formula (19) shows that the relationship between grid strength and the small signal stability of the SIPES can be represented with the explicit function of SCR.

Documents
Document Sharing Hub

Full document details: BS IEC TR 63401-1:2022

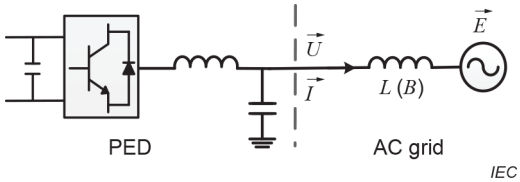

Figure 4 – A typical SIPES

The small signal stability of the SIPES depends on whether or not the solutions of (19) (i.e., system eigenvalues) are in the left-half of the complex plane. In fact, when the SCR is large, these eigenvalues are located in the left-half of the complex plane, which indicates that the system is stable. When the SCR becomes small, these eigenvalues may be located in the right-half of the complex plane, which may cause the small signal instability in the SIPES. Particularly, when the SCR is equal to a certain value, (19) has a pair of conjugate solutions located at the imaginary axis in the complex plane, which indicates that the system is critically stable. This value related to the critical stability is defined as critical short circuit ratio (SCR_c).

The relationship between the small signal stability and grid strength as well as the concept of SCR_c illustrated in Figure 5 a) shows the changes of eigenvalues' trajectories with SCR; Figure 5(b) shows the change of the damping ratio of the weakest eigenvalue with SCR.

It can be observed from Figure 5 a) that the SIPES's small signal stability increases with SCR. When SCR is smaller than 2,5, the system is unstable since it has eigenvalues in the right-half of the complex plane; when SCR is equal to 2,5, the system is critically stable since it has a pair of conjugate eigenvalues at the imaginary axis in the complex plane; and when SCR becomes larger than 2,5, the system is stable since its eigenvalues are in the left-half of the complex plane.

A similar observation can also be obtained from Figure 5 b) in terms of the relationship between the damping ratio of the system's weakest eigenvalue and SCR. It can be seen that the SCR_c can characterize the stability boundary of the SIPES: when the SCR is equal to SCR_c = 2,5, the system is critically stable since the damping ratio is zero; when the SCR is larger than SCR_c = 2,5, the system is stable since its damping ratio is larger than zero; and when the SCR is smaller than SCR_c = 2,5, the system is unstable due to the damping ratio smaller than zero.

It is worth noting that the definition and analysis of gSCR in 5.2.2.3 are the basis of those in multi-infeed power electronic system (MIPES).

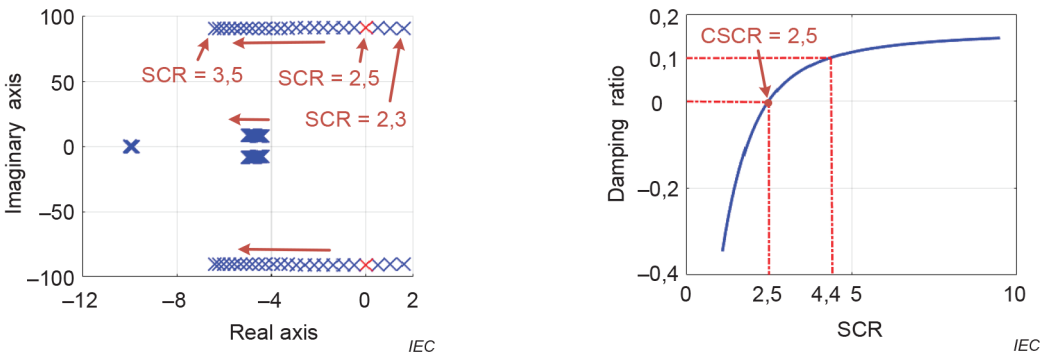

a) b)

Figure 5 – Changes of system eigenvalues, and the weakest system eigenvalue's damping ratio with SCR in a SIPES

Documents
Document Sharing Hub
Full document details: BS IEC TR 63401-1:2022

5.2.2.4 Single WPP with static reactive power support plant (capacitor bank)

Figure 6 depicts the schematic diagram of a WPP with capacitor banks connected at the MV collection grid. The equivalent circuit can be represented as shown in Figure 7.

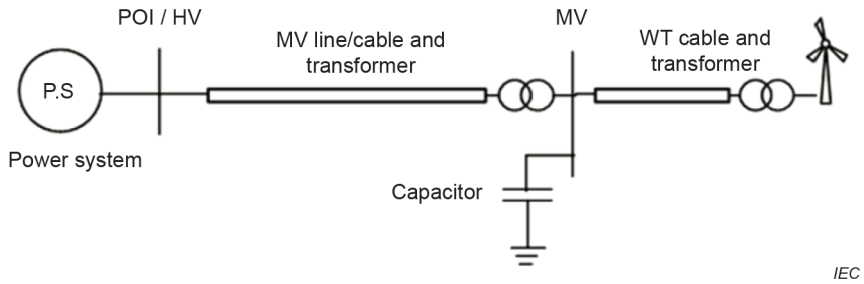

Figure 6 – Schematic diagram of a WPP with static reactive support plant (capacitor banks)

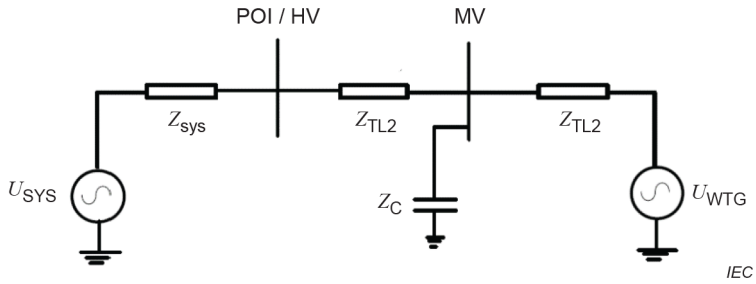

Figure 7 – Equivalent circuit representation of the WPP shown in Figure 6

Using the equivalent circuit shown in Figure 6 the following impedance relationship can be established:

$$Z_{WTG} = Z_{TL1} + \frac{Z_c \times (Z_{TL2} + Z_{sys})}{Z_C + Z_{TL2} + Z_{sys}} \tag{20}$$

Considering typical impedances of the WPP and with a static reactive compensation of 5 % to 10 % of the WPP's nominal power, one can conclude that the value of Z_C can very marginally reduce the SCR relative to the WPP configuration without capacitor banks in service. For simplicity, the shunt capacitor banks can therefore be excluded from SCR calculations.

5.2.2.5 Single WPP with dynamic reactive power support (synchronous condenser)

Figure 8 shows the schematic diagram of a WPP with synchronous condensers connected at the MV collection grid. The equivalent circuit can be represented as shown in Figure 9.

Documents
Document Sharing Hub
Full document details: BS IEC TR 63401-1:2022

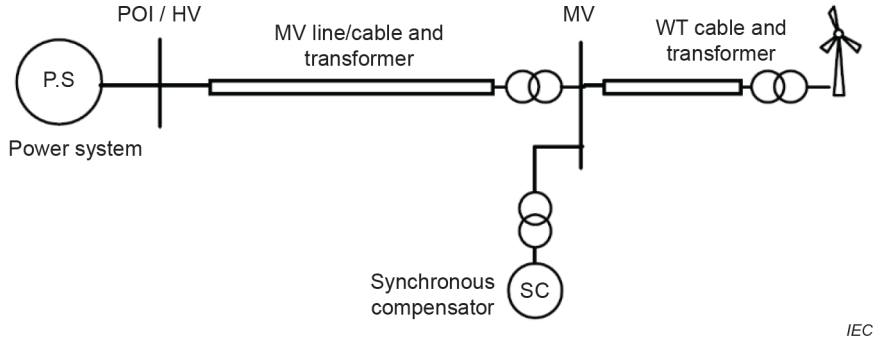

Figure 8 – Schematic diagram of a WPP with dynamic reactive support plant (synchronous condensers)

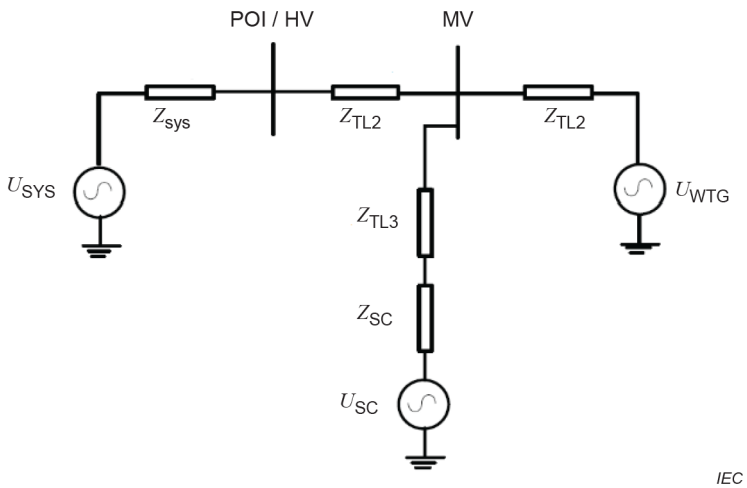

Figure 9 – Equivalent circuit representation of the WPP shown in Figure 8

Using the equivalent circuit shown in Figure 9 the following impedance relationship can be established:

$$Z_{WTG} = Z_{TL1} + \frac{(Z_{TL3} + Z_{SC}) \times (Z_{TL2} + Z_{SYS})}{Z_{TL3} + Z_{SC} + Z_{TL2} + Z_{SYS}} \quad (21)$$

Unlike with capacitor banks, the use of a synchronous condenser will allow a substantial increase in the SCR value. A numerical example describing application of synchronous condensers to increase the SCR value in a practical WPP is explained in CIGRE B4.62 TB671 report [2].

5.3 Short circuit ratio for multi grid-connected WPP system

5.3.1 General

The SCR indexes in 5.2 were proposed based on the assumption that multiple power electronic devices (PEDs) in the same renewable energy can be considered to share the same point of common coupling, which can only roughly reflect the overall voltage support strength of the AC grid. However, the above SCR indexes do not fully consider the complex dynamic coupling relationships which exist among the AC grid and multiple PEDs in the renewable energy station. Hence, the above SCR indexes are not suitable for the refined evaluation of the grid strength of the MIPES.

Documents
Document Sharing Hub
Full document details: BS IEC TR 63401-1:2022

Similar to the SCR and CSCR in a single-infeed system, it is urgent to propose a proper and accurate multi-infeed short circuit ratio (MISCR) and critical value index for the MIPES. Nowadays, the research on the MISCR in academia and industry can be divided into two schools, which include the definition of modal decoupling method and the definition of circuit aggregation method. The former is represented by gSCR index, while the latter includes ESCR, WSCR, CSCR, etc. Subclause 5.3 provides the detailed definition and analysis of the indexes of the above.

5.3.2 Modal decoupling method

5.3.2.1 General

Subclause 5.3.2 firstly discusses the relation between the small signal stability of multi-infeed power electronic systems (MIPES) including multi-grid-connected WPPs homogeneous system and grid strength assessment. On this basis, the index generalized short circuit ratio (gSCR) is introduced to assess the grid strength of a MIPES in terms of its small signal stability while the critical gSCR (CgSCR) can characterize the stability boundary of a MIPES. Further, the definition of the index gSCR and CgSCR can still be extended to multi grid-connected WPPs heterogeneous system.

5.3.2.2 Definition of gSCR in the homogeneous system

The relationship between the grid strength and the small signal stability of a SIPES can be extended to the homogeneous MIPES to define the gSCR and CgSCR for the small signal stability analysis of the MIPES.

The characteristic formula of homogeneous MIPES can be written as:

$$\det\left(\begin{bmatrix} G_{\mathrm{dd}}(s) & G_{\mathrm{dq}}(s) \\ G_{\mathrm{qd}}(s) & G_{\mathrm{qq}}(s) \end{bmatrix} \times \boldsymbol{I}_n + \begin{bmatrix} \beta(s) & \alpha(s) \\ -\alpha(s) & \beta(s) \end{bmatrix} \times \boldsymbol{Y}_{\mathrm{eq}}\right) = 0 \tag{22}$$

where

$\boldsymbol{Y}_{\mathrm{eq}}=\boldsymbol{S}_{\mathrm{B}}^{-1}\boldsymbol{B}$ is the diagonal matrix in which $\boldsymbol{S}_{\mathrm{B}}$ = diag($S_{\mathrm{B}i}$) is composed of the diagonal elements $S_{\mathrm{B}}i$ (i=1…n), representing the rated capacity of each PED;

$\boldsymbol{B}$ is the reduced node susceptance matrix after eliminating passives buses and infinite buses.

As the matrix $\boldsymbol{Y}_{\mathrm{eq}}$ is diagonalizable, there exists a matrix $\boldsymbol{W}$ that can decompose the matrix $\boldsymbol{Y}_{\mathrm{eq}}$ into a diagonal matrix in which the diagonal elements consist of the eigenvalues (λ_i, i = 1,…,n) in the order of $0 < \lambda_1 \le \lambda_2 \le \cdots \le \lambda_n$. That is:

$$\boldsymbol{W}^{-1}\boldsymbol{Y}_{\mathrm{eq}}\boldsymbol{W} = \boldsymbol{\Lambda} = \mathrm{diag}(\lambda_i) \tag{23}$$

Combining (22) and (23) yields:

$$\prod_{i=1,2,\ldots,n}\left[c_i(s)\right] = 0 \tag{24}$$

Documents
Document Sharing Hub
Full document details: BS IEC TR 63401-1:2022

where

$$c_i(s) = \det\left(\begin{bmatrix} G_{\mathrm{dd}}(s) & G_{\mathrm{dq}}(s) \\ G_{\mathrm{qd}}(s) & G_{\mathrm{qq}}(s) \end{bmatrix} + \lambda_i \begin{bmatrix} \beta(s) & \alpha(s) \\ -\alpha(s) & \beta(s) \end{bmatrix}\right) = 0 \tag{25}$$

Formula (24) shows that the small signal stability of the MIPES can be analyzed by studying the stability of a set of equivalent SIPESs. The small signal stability of the MIPES depends on whether the eigenvalues of the characteristic Formula (24) are in the left-half of the complex plane. In (24), the characteristic formula of the MIPES is decoupled into a set of characteristic formulae of the equivalent SIPESs. The specific decoupling mechanism is shown in Figure 10. Thus, the small signal stability of the MIPES depends on whether or not the eigenvalues of the characteristic formula for each equivalent SIPES are in the left-half of the complex plane. In other words, the small signal stability of the MIPES depends on the small signal stability of its each equivalent SIPESs.

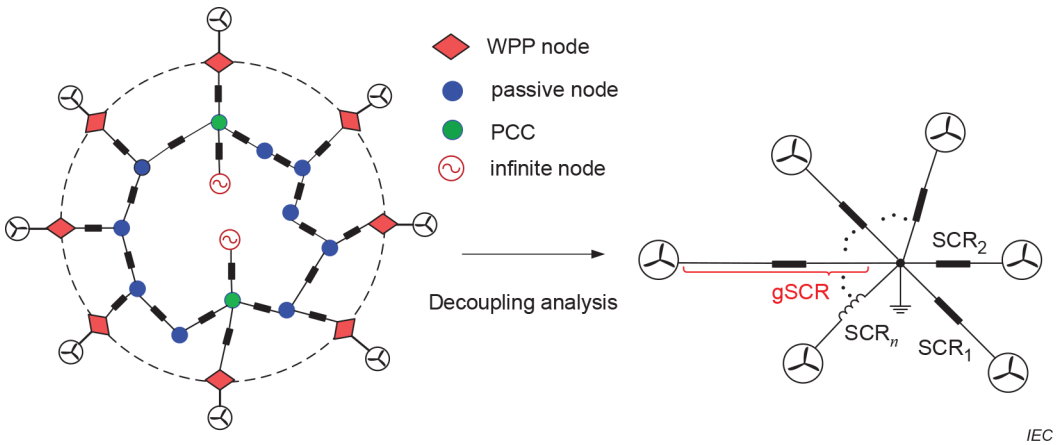

Figure 10 – Mechanism illustration of decoupling a MIPES into a set of equivalent SIPESs

In a typical homogeneous MIPES as shown in Figure 10, the gSCR is defined as the minimum eigenvalue λ_1 of extended admittance matrix $\boldsymbol{Y}_{\mathrm{eq}}$.

$$gSCR = \min_{i=1,\ldots,n} SCR_{i_\mathrm{eq}} = \min \lambda\left(\boldsymbol{Y}_{\mathrm{eq}}\right) = \min_{i=1,\ldots,n} \lambda_i = \lambda_1 \tag{26}$$

The gSCR can also be defined equivalently as:

$$gSCR = \frac{S_i}{P_{\mathrm{W}i} + \sum_{\substack{j=1 \\ j\neq i}}^{n} P_{\mathrm{W}j} \times gMIIF_{ij}} \tag{27}$$

Documents
Document Sharing Hub
Full document details: BS IEC TR 63401-1:2022

where

S_i is the short circuit capacity observed on bus i;

$gMIIF$ is the generalized multi-infeed interaction factor, which is defined as $gMIIF_{ji} = \frac{Z_{ij}}{Z_{ii}} \frac{v_{j1}}{v_{i1}}$;

v_{i1} is the ith element of the right eigenvector v_1.

Based on that definition and the relation between the gSCR and MIPES stability, the following features of gSCR can be used to analyze the small signal stability of a MIPES:

- The small signal stability of the homogeneous MIPES depends on the small signal stability of each of its equivalent SIPES. In other word, a MIPES can be decoupled into n equivalent SIPES with $SCR_{i_eq} = \lambda_i$.
- The gSCR is the generalized representation of SCR defined in (23). When multiple PEDs are connected to the AC grid as shown in Figure 11, the gSCR is equal to the minimum SCR_{i_eq} of all equivalent SIPESs for the MIPES, (i.e., the gSCR is equal to the minimum eigenvalue λ_1 of $\boldsymbol{Y}_{eq}$). Thus, the SCR in (23) is a special case of the gSCR in (27).
- The gSCR retains the same physical interpretation of SCR defined for SIPES. Thus, the stability of the MIPES depends on the gSCR defined in (27).
- The impact of the interactions among PEDs on the stability of the MIPES can be analyzed based on the participation factors of the gSCR. Since the gSCR is defined as the minimum eigenvalue λ_1, which quantifies the grid strength and the stability of the MIPES, the impact of each PED on the stability of the MIPES can be characterized by the factor that each PED participates to λ_1. The factor p_{1j} is defined as in (28) below. When a PED has a larger participation factor, it more significantly affects the stability of the whole MIPES, and its connected bus is weaker.

$$p_{1j} = v_{1j} u_{j1} \tag{28}$$

- where p_{1j} is the participation factor of the jth PED; v_{1j} is the 1st-row and j^{th}-column element of matrix $\boldsymbol{v} = \boldsymbol{W}^{-1}$, which is the left eigenvector matrix of $\boldsymbol{Y}_{eq}$;and u_{j1} is the jth-row and 1st-column element of matrix $\boldsymbol{u} = \boldsymbol{W}$, which is the right eigenvector matrix of $\boldsymbol{Y}_{eq}$.

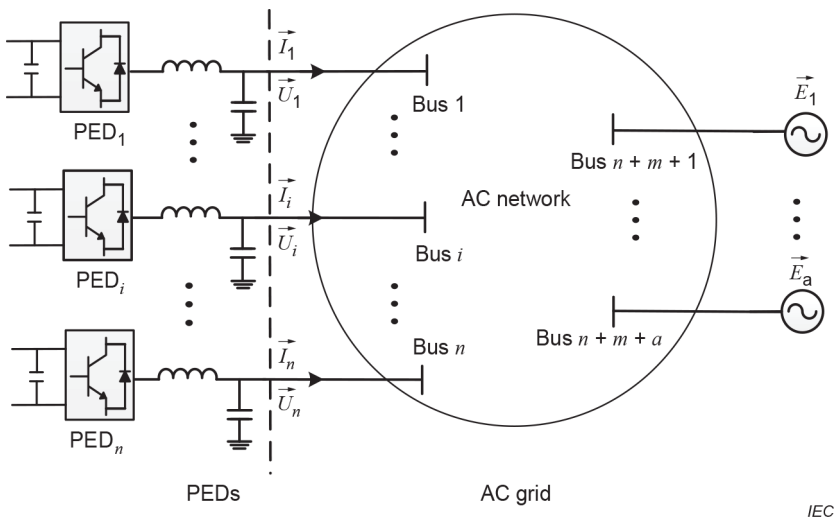

Figure 11 – A typical MIPES

Documents
Document Sharing Hub
Full document details: BS IEC TR 63401-1:2022

CgSCR is the value of gSCR when the MIPES has a pair of conjugate eigenvalues at the imaginary axis in the complex plane. The CgSCR characterizes the stability boundary of the homogeneous MIPES. The homogeneous MIPES is stable if and only if the gSCR is greater than CgSCR. Thus, the difference between the gSCR and CgSCR indicates the stability margin of the homogeneous MIPES.

It should be noted that the CgSCR is a constant for a given PED control strategy and a given set of control parameters of the PED in the weakest equivalent SIPES for the MIPES. Thus, once the stability boundary of a SIPES is obtained, the stability boundary of a complex MIPES is also determined. As for a given system, the CgSCR is the value of gSCR when the real part of the dominant eigenvalues of the weakest equivalent SIPES is 0. Its value can be analyzed by the critical stability condition of the weakest equivalent SIPES:

$$\det\left(\begin{bmatrix} G_{\mathrm{dd}}(s_{\mathrm{d}}) & G_{\mathrm{dq}}(s_{\mathrm{d}}) \\ G_{\mathrm{qd}}(s_{\mathrm{d}}) & G_{\mathrm{qq}}(s_{\mathrm{d}}) \end{bmatrix} + \lambda_1^c \begin{bmatrix} \beta(s_{\mathrm{d}}) & \alpha(s_{\mathrm{d}}) \\ -\alpha(s_{\mathrm{d}}) & \beta(s_{\mathrm{d}}) \end{bmatrix}\right)\Bigg|_{\mathrm{Re}(s_{\mathrm{d}}=0)} = 0 \tag{29}$$

where the real part of the dominant characteristic roots s_{d} is 0(Re(s_{d}) = 0). λ_1^c is defined as the critical generalized short circuit ratio (CgSCR).

More importantly, the gSCR and CgSCR can simplify the small signal stability analysis of the homogeneous MIPES. The difference between the gSCR and CgSCR indicates the stability margin of the MIPES. Both gSCR and CgSCR can be determined in the weakest equivalent SIPES that has the minimum eigenvalue λ_1 of matrix $\boldsymbol{Y}_{\mathrm{eq}}$. Thus, the small signal stability analysis of the homogeneous MIPES can be simplified as that of its weakest equivalent SIPES.

5.3.2.3 Definition of gSCR in the heterogeneous system

In 5.3.2.3, the definition of gSCR in the homogeneous MIPES is extended to the heterogeneous MIPES. Based on the eigenvalue perturbation theory, it is proved that the dominant characteristic trajectories of heterogeneous MIPES can be approximated by the dominant characteristic trajectories of the equivalent homogeneous MIPES. It is shown that the definition of gSCR in homogeneous or heterogeneous MIPES is consistent. As for the CgSCR value of heterogeneous MIPES, it can be obtained by constructing an equivalent single-infeed system analytically or by hardwire simulation experiment. The detailed proof process is shown as follows.

Actually, the dynamics differences among different PEDs in the heterogeneous system exist. The closed-loop characteristic formula including the dynamics of MIPES and the AC network can be expressed as follows:

$$\Sigma:\ \det\left(\boldsymbol{J}_{\mathrm{sys1}}(s)\right) = \det\left(\begin{bmatrix} \boldsymbol{\Lambda}_{11}(s) & \boldsymbol{\Lambda}_{12}(s) \\ \boldsymbol{\Lambda}_{21}(s) & \boldsymbol{\Lambda}_{22}(s) \end{bmatrix} + \begin{bmatrix} \boldsymbol{S}_{\mathrm{B}}^{-1}\boldsymbol{B} & \\ & \boldsymbol{S}_{\mathrm{B}}^{-1}\boldsymbol{B} \end{bmatrix}\right) = 0 \tag{30}$$

Documents
Document Sharing Hub
Full document details: BS IEC TR 63401-1:2022