BS ISO 10300-3:2014

BSI Standards Publication

Calculation of load capacity of bevel gears

Part 3: Calculation of tooth root strength

bsi.

...making excellence a habit.™

Document Sharing Hub

Full document details: BS ISO 10300-3:2014

National foreword

This British Standard is the UK implementation of ISO 10300-3:2014. It supersedes BS ISO 10300-3:2001 which is withdrawn.

The UK participation in its preparation was entrusted to Technical Committee MCE/5/-/13, Bevel gears.

A list of organizations represented on this committee can be obtained on request to its secretary.

This publication does not purport to include all the necessary provisions of a contract. Users are responsible for its correct application.

© The British Standards Institution 2014. Published by BSI Standards Limited 2014

ISBN 978 0 580 71821 2

ICS 21.200

Compliance with a British Standard cannot confer immunity from legal obligations.

This British Standard was published under the authority of the Standards Policy and Strategy Committee on 31 March 2014.

Amendments issued since publication

Date	Text affected

Documents
Document Sharing Hub

Full document details: BS ISO 10300-3:2014

INTERNATIONAL STANDARD

ISO 10300-3

Second edition
2014-04-01

Calculation of load capacity of bevel gears —

Part 3: Calculation of tooth root strength

Calcul de la capacité de charge des engrenages coniques —

Partie 3: Calcul de la résistance du pied de dent

Reference number
ISO 10300-3:2014(E)

Documents
Document Sharing Hub
© ISO 2014

Full document details: BS ISO 10300-3:2014

COPYRIGHT PROTECTED DOCUMENT

© ISO 2014

All rights reserved. Unless otherwise specified, no part of this publication may be reproduced or utilized otherwise in any form or by any means, electronic or mechanical, including photocopying, or posting on the internet or an intranet, without prior written permission. Permission can be requested from either ISO at the address below or ISO's member body in the country of the requester.

ISO copyright office
Case postale 56 • CH-1211 Geneva 20
Tel. + 41 22 749 01 11
Fax + 41 22 749 09 47
E-mail copyright@iso.org
Web www.iso.org

Published in Switzerland

© ISO 2014 – All rights reserved

Documents
Document Sharing Hub

Full document details: BS ISO 10300-3:2014

Contents

Page

Foreword ... **iv**
Introduction ... **v**
1 Scope ... **1**
2 Normative references ... **1**
3 Terms and definitions ... **1**
4 Symbols, units and abbreviated terms ... **2**
5 General rating procedure ... **2**
6 Gear tooth rating formulae — Method B1 ... **3**
6.1 Tooth root stress formula ... 3
6.2 Permissible tooth root stress ... 4
6.3 Calculated safety factor ... 5
6.4 Tooth root stress factors ... 5
6.5 Permissible tooth root stress factors ... 13
7 Gear tooth rating formulae — Method B2 ... **17**
7.1 Tooth root stress formula ... 17
7.2 Permissible tooth root stress ... 17
7.3 Calculated safety factor ... 18
7.4 Tooth root stress factors ... 18
7.5 Permissible tooth root stress factors ... 36
8 Factors for permissible tooth root stress common for method B1 and method B2 ... **36**
8.1 Size factor, Y_X ... 36
8.2 Life factor, Y_{NT} ... 38
Bibliography ... **41**

© ISO 2014 – All rights reserved

Documents
Document Sharing Hub
Full document details: BS ISO 10300-3:2014

Foreword

ISO (the International Organization for Standardization) is a worldwide federation of national standards bodies (ISO member bodies). The work of preparing International Standards is normally carried out through ISO technical committees. Each member body interested in a subject for which a technical committee has been established has the right to be represented on that committee. International organizations, governmental and non-governmental, in liaison with ISO, also take part in the work. ISO collaborates closely with the International Electrotechnical Commission (IEC) on all matters of electrotechnical standardization.

The procedures used to develop this document and those intended for its further maintenance are described in the ISO/IEC Directives, Part 1. In particular the different approval criteria needed for the different types of ISO documents should be noted. This document was drafted in accordance with the editorial rules of the ISO/IEC Directives, Part 2. www.iso.org/directives

Attention is drawn to the possibility that some of the elements of this document may be the subject of patent rights. ISO shall not be held responsible for identifying any or all such patent rights. Details of any patent rights identified during the development of the document will be in the Introduction and/or on the ISO list of patent declarations received. www.iso.org/patents

Any trade name used in this document is information given for the convenience of users and does not constitute an endorsement.

For an explanation on the meaning of ISO specific terms and expressions related to conformity assessment, as well as information about ISO's adherence to the WTO principles in the Technical Barriers to Trade (TBT) see the following URL: Foreword - Supplementary information

The committee responsible for this document is ISO/TC 60, *Gears*, Subcommittee SC 2, *Gear capacity calculation*.

This second edition cancels and replaces the first edition (ISO 10300-3:2001), which has been technically revised.

ISO 10300 consists of the following parts, under the general title *Calculation of load capacity of bevel gears*:

— *Part 1: Introduction and general influence factors*

— *Part 2: Calculation of surface durability (pitting)*

— *Part 3: Calculation of tooth root strength*

© ISO 2014 – All rights reserved
Documents
Document Sharing Hub
Full document details: BS ISO 10300-3:2014

Introduction

When ISO 10300:2001 (all parts, withdrawn) became due for (its first) revision, the opportunity was taken to include hypoid gears, since previously the series only allowed for calculating the load capacity of bevel gears without offset axes. The former structure is retained, i.e. three parts of the ISO 10300 series, together with ISO 6336-5, and it is intended to establish general principles and procedures for rating of bevel gears. Moreover, ISO 10300 (all parts) is designed to facilitate the application of future knowledge and developments, as well as the exchange of information gained from experience.

In view of the decision for ISO 10300 (all parts) to cover hypoid gears also, it was agreed to include a separate clause: "Gear tooth rating formulae — Method B2" in this part of ISO 10300, while the former methods B and B1 were combined into one method, i.e. method B1. So, it became necessary to present a new, clearer structure of the three parts, which is illustrated in ISO 10300-1:2014, Figure 1. Note, ISO 10300 (all parts) gives no preferences in terms of when to use method B1 and when method B2.

Failure of gear teeth by breakage can be brought about in many ways; severe instantaneous overloads, excessive pitting, case crushing and bending fatigue are a few. The strength ratings determined by the formulae in this part of ISO 10300 are based on cantilever projection theory modified to consider the following:

— compressive stress at the tooth roots caused by the radial component of the tooth load;

— non-uniform moment distribution of the load, resulting from the inclined contact lines on the teeth of spiral bevel gears;

— stress concentration at the tooth root fillet;

— load sharing between adjacent contacting teeth;

— lack of smoothness due to a low contact ratio.

The formulae are used to determine a load rating, which prevents tooth root fracture during the design life of the bevel gear. Nevertheless, if there is insufficient material under the teeth (in the rim), a fracture can occur from the root through the rim of the gear blank or to the bore (a type of failure not covered by this part of ISO 10300). Moreover, it is possible that special applications require additional blank material to support the load.

Surface distress (pitting or wear) can limit the strength rating, either due to stress concentration around large sharp cornered pits, or due to wear steps on the tooth surface. Neither of these effects is considered in this part of ISO 10300.

In most cases, the maximum tensile stress at the tooth root (arising from bending at the root when the load is applied to the tooth flank) can be used as a determinant criterion for the assessment of the tooth root strength. If the permissible stress number is exceeded, the teeth can break.

When calculating the tooth root stresses of straight bevel gears, this part of ISO 10300 starts from the assumption that the load is applied at the tooth tip of the virtual cylindrical gear. The load is subsequently converted to the outer point of single tooth contact. The procedure thus corresponds to method C for the tooth root stress of cylindrical gears (see ISO 6336-3[1]).

For spiral bevel and hypoid gears with a high face contact ratio of $\varepsilon_{v\beta} > 1$ (method B1) or with a modified contact ratio of $\varepsilon_{v\gamma} > 2$ (method B2), the midpoint in the zone of action is regarded as the critical point of load application.

The breakage of a tooth generally means the end of a gear's life. It is often the case that all gear teeth are destroyed as a consequence of the breakage of a single tooth. A safety factor, S_F, against tooth breakage higher than the safety factor against damage due to pitting is, therefore, generally to be preferred (see ISO 10300-1).

© ISO 2014 – All rights reserved

Documents
Document Sharing Hub
Full document details: BS ISO 10300-3:2014

Documents
Document Sharing Hub

Calculation of load capacity of bevel gears —

Part 3: Calculation of tooth root strength

1 Scope

This part of ISO 10300 specifies the fundamental formulae for use in the tooth root stress calculation of straight and helical (skew), Zerol and spiral bevel gears including hypoid gears, with a minimum rim thickness under the root of 3,5 m_{mn}. All load influences on tooth root stress are included, insofar as they are the result of load transmitted by the gearing and able to be evaluated quantitatively. Stresses, such as those caused by the shrink fitting of gear rims, which are superposed on stresses due to tooth loading, are intended to be considered in the calculation of the tooth root stress, σ_F, or the permissible tooth root stress σ_{FP}. This part of ISO 10300 is not applicable in the assessment of the so-called flank breakage, a tooth internal fatigue fracture (TIFF).

The formulae in this part of ISO 10300 are based on virtual cylindrical gears and restricted to bevel gears whose virtual cylindrical gears have transverse contact ratios of $\varepsilon_{v\alpha} < 2$. The results are valid within the range of the applied factors as specified in ISO 10300-1 (see also ISO 6336-3[1]). Additionally, the given relationships are valid for bevel gears, of which the sum of profile shift coefficients of pinion and wheel is zero (see ISO 23509).

This part of ISO 10300 does not apply to stress levels above those permitted for 10^3 cycles, as stresses in that range could exceed the elastic limit of the gear tooth.

Warning — The user is cautioned that when the formulae are used for large average mean spiral angles $(\beta_{m1} + \beta_{m2})/2 > 45°$, for effective pressure angles $\alpha_e > 30°$ and/or for large face widths $b > 13\ m_{mn}$, the calculated results of ISO 10300 (all parts) should be confirmed by experience.

2 Normative references

The following documents, in whole or in part, are normatively referenced in this document and are indispensable to its application. For dated references, only the edition cited applies. For undated references, the latest edition of the referenced document (including any amendments) applies.

ISO 1122-1, *Vocabulary of gear terms — Part 1: Definitions related to geometry*

ISO 6336-5, *Calculation of load capacity of spur and helical gears — Part 5: Strength and quality of materials*

ISO 10300-1:2014, *Calculation of load capacity of bevel gears — Part 1: Introduction and general influence factors*

ISO 10300-2:2014, *Calculation of load capacity of bevel gears — Part 2: Calculation of surface durability (pitting)*

ISO 23509:2006, *Bevel and hypoid gear geometry*

3 Terms and definitions

For the purposes of this document, the terms and definitions given in ISO 1122-1 and ISO 23509 (geometrical gear terms) and the following apply.

© ISO 2014 – All rights reserved

Documents
Document Sharing Hub

Full document details: BS ISO 10300-3:2014

3.1
tooth root breakage
failure of gear teeth at the tooth root by static or dynamic overload

3.2
nominal tooth root stress
σ_{F0}
bending stress in the critical section of the tooth root calculated for the critical point of load application for error-free gears loaded by a constant nominal torque

3.3
tooth root stress
σ_F
determinant bending stress in the critical section of the tooth root calculated for the critical point of load application including the load factors which consider static and dynamic loads and load distribution

3.4
nominal stress number
$\sigma_{F,lim}$
maximum tooth root stress of standardized test gears and determined at standardized operating conditions as specified in ISO 6336-5

3.5
allowable stress number
σ_{FE}
maximum bending stress of the un-notched test piece under the assumption that the material is fully elastic

3.6
permissible tooth root stress
σ_{FP}
maximum tooth root stress of the evaluated gear set including all influence factors

4 Symbols, units and abbreviated terms

For the purposes of this document, the symbols and units given in Table 1 and Table 2 of ISO 10300-1:2014, as well as the abbreviated terms given in Table 1 of ISO 10300-2:2014, apply (see ISO 6336-5).

5 General rating procedure

There are two main methods for determining tooth bending strength of bevel and hypoid gears: method B1 and method B2. They are provided in Clauses 6 and 7, while Clause 8 contains those influence factors which are equal for both methods. With method B1, the same set of formulae may be used for bevel and hypoid gears; method B2 partly has different sets of formulae for bevel gears and for hypoid gears (see 7.4.3 for general aspects).

With both methods, the capability of a gear tooth to resist tooth root stresses shall be determined by the comparison of the following stress values:

— **tooth root stress** σ_F, based on the geometry of the tooth, the accuracy of its manufacture, the rigidity of the gear blanks, bearings and housing, and the operating torque, expressed by the tooth root stress formula (see 6.1 and 7.1);

— **permissible tooth root stress** σ_{FP}, based on the bending stress number, $\sigma_{F,lim}$, of a standard test gear and the effect of the operating conditions under which the gears operate, expressed by the permissible tooth root stress formula (see 6.2 and 7.2).

© ISO 2014 – All rights reserved
Documents
Document Sharing Hub
Full document details: BS ISO 10300-3:2014

NOTE In respect of the permissible tooth root stress, reference is made to a stress "number", a designation adopted because pure stress, as determined by laboratory testing, is not calculated by the formulae in this part of ISO 10300. Instead, an arbitrary value is calculated and used in this part of ISO 10300, with accompanying changes to the allowable stress number in order to maintain consistency for design comparison.

The ratio of the permissible root stress and the calculated root stress is the safety factor S_F. The value of the minimum safety factor for tooth root stress, $S_{F,min}$, should be ≥ 1,3 for spiral bevel gears. For straight bevel gears, or where $\beta_m \leq 5°$, $S_{F,min}$ should be ≥ 1,5.

It is recommended that the gear designer and customer agree on the value of the minimum safety factor.

Tooth breakage usually ends transmission service life. The destruction of all gears in a transmission can be a consequence of the breakage of one tooth, then, the drive train between input and output shafts is interrupted. Therefore, the chosen value of the safety factor, S_F, against tooth breakage should be carefully chosen to fulfil the application requirements (see ISO 10300-1 for general comments on the choice of safety factor).

6 Gear tooth rating formulae — Method B1

6.1 Tooth root stress formula

The calculation of the tooth root stress is based on the maximum bending stress at the tooth root. It is determined separately for pinion (suffix 1) and wheel (suffix 2); in the case of hypoid gears, additionally for drive flank (suffix D) and coast flank (suffix C):

$$\sigma_{F\text{-}B1} = \sigma_{F0\text{-}B1} K_A K_v K_{F\beta} K_{F\alpha} < \sigma_{FP\text{-}B1} \tag{1}$$

with the load factors K_A, K_v, $K_{F\beta}$, $K_{F\alpha}$ as specified in ISO 10300-1.

© ISO 2014 – All rights reserved

Documents
Document Sharing Hub
Full document details: BS ISO 10300-3:2014

The nominal tooth root stress is defined as the maximum bending stress at the tooth root (30° tangent to the root fillet):

$$\sigma_{\text{F0-B1}} = \frac{F_{\text{vmt}}}{b_{\text{v}}\, m_{\text{mn}}} Y_{\text{Fa}} Y_{\text{Sa}} Y_{\varepsilon} Y_{\text{BS}}\, Y_{\text{LS}} \tag{2}$$

where

F_{vmt} is the nominal tangential force of the virtual cylindrical gear which should be in accordance with Formula (2) of ISO 10300-1:2014;

b_{v} is the face width of the virtual cylindrical gear calculated for the active flank, drive or coast side, as specified in ISO 10300-1:2014, Annex A;

Y_{Fa} is the tooth form factor (see 6.4.1), which accounts for the influence of the tooth form on the nominal bending stress at the tooth root for load application at the tooth tip;

Y_{Sa} is the stress correction factor (see 6.4.2), which accounts for the stress increasing notch effect in the root fillet, as well as for the radial component of the tooth load and the fact that the stress condition in the critical root section is complex, but not for the influence of the bending moment arm;

Y_{ε} is the contact ratio factor (see 6.4.3), which accounts for the conversion of the root stress determined for the load application at the tooth tip to the determinant position;

Y_{BS} is the bevel spiral angle factor, which accounts for smaller values for l_{bm} compared to the total face width, b_{v}, and the inclined lines of contact (see 6.4.4);

Y_{LS} is the load sharing factor, which accounts for load distribution between two or more pairs of teeth (see 6.4.5).

The determinant position of load application is:

a) the outer point of single tooth contact, if $\varepsilon_{\text{v}\beta} = 0$;

b) the midpoint of the zone of action, if $\varepsilon_{\text{v}\beta} \geq 1$;

c) interpolation between a) and b), if $0 < \varepsilon_{\text{v}\beta} < 1$.

6.2 Permissible tooth root stress

The permissible tooth root stress, σ_{FP}, shall be calculated separately for pinion and wheel. The values should preferably be evaluated on the basis of the strength of a standard test gear instead of a prismatic specimen, which deviates too much with respect to similarity in geometry, course of movement and manufacture.

$$\sigma_{\text{FP-B1}} = \sigma_{\text{FE}}\, Y_{\text{NT}}\, Y_{\delta,\text{relT-B1}}\, Y_{\text{R,relT-B1}}\, Y_{\text{X}} \tag{3}$$

© ISO 2014 – All rights reserved
Documents
Document Sharing Hub
Full document details: BS ISO 10300-3:2014

$$\sigma_{FP\text{-}B1} = \sigma_{F,lim}\ Y_{ST}\ Y_{NT}\ Y_{\delta,relT\text{-}B1}\ Y_{R,relT\text{-}B1}\ Y_X \tag{4}$$

where

σ_{FE} is the allowable stress number (tooth root);

σ_{FE} $= \sigma_{F,lim1,2}\ Y_{ST}$, is the basic bending strength of the un-notched specimen under the assumption that the material (including heat treatment) is fully elastic;

$\sigma_{F,lim}$ is the nominal stress number (bending) of the test gear, which accounts for material, heat treatment, and surface influence at test gear dimensions as specified in ISO 6336-5;

Y_{ST} is the stress correction factor for the dimensions of the standard test gear, Y_{ST} = 2,0;

$Y_{\delta,relT\text{-}B1}$ is the relative notch sensitivity factor for the permissible stress number, related to the conditions at the standard test gear (see 6.5.2), $Y_{\delta,relT} = Y_\delta / Y_{\delta T}$ accounts for the notch sensitivity of the material;

$Y_{R,relT\text{-}B1}$ is the relative surface condition factor (see 6.5.1), $Y_{R,relT} = Y_R / Y_{RT}$ accounts for the surface condition at the root fillet, related to the conditions at the test gear;

Y_X is the size factor for tooth root strength, which accounts for the influence of the module on the tooth root strength (see 8.1);

Y_{NT} is the life factor, which accounts for the influence of required numbers of cycles of operation (see 8.2).

6.3 Calculated safety factor

The evaluated tooth root stress, σ_F, shall be $\leq \sigma_{FP}$, which is the permissible tooth root stress. The calculated safety factor against tooth breakage shall be determined separately for pinion and wheel:

$$S_{F\text{-}B1} = \frac{\sigma_{FP\text{-}B1}}{\sigma_{F\text{-}B1}} > S_{F,min} \tag{5}$$

NOTE This is the calculated safety factor with respect to the transmitted torque.

Considerations in reference to the safety factors and the risk (probability) of failure are given in ISO 10300-1:2014, 5.2.

6.4 Tooth root stress factors

6.4.1 Tooth form factor, Y_{Fa}

6.4.1.1 General

The tooth form factor, Y_{Fa}, accounts for the influence of the tooth form on the nominal tooth root stress in the case of load application at the tooth tip. It is determined separately for pinion and wheel. In doing so, the possibility to manufacture bevel and hypoid gears with different pressure angles at drive and coast side shall be considered (see Figure 1).

In the case of gears with tip and root relief, the actual bending moment arm is slightly smaller, but this should be neglected and the calculation is on the safe side.

Bevel gears without offset generally have octoid teeth and tip and root relief. However, deviations from an involute profile are small, especially in view of the tooth root cord and bending moment arm, and thus both, tip and root relief, may be neglected when calculating the tooth form factor.

AVA Documents
Document Sharing Hub

© ISO 2014 – All rights reserved

Full document details: BS ISO 10300-3:2014

The distance between the contact points of the 30° tangents at the root fillets of the tooth profile of the virtual cylindrical gear is taken as the critical section for calculation (see Figure 1).

By method B1 of ISO 10300, the tooth form factor, Y_{Fa}, and stress correction factor, Y_{Sa}, are determined for the nominal gear without deviations. The slight reduction in tooth thickness for backlash between teeth may be neglected for the load capacity calculation. However, the size reduction shall be taken into account when the outer tooth thickness allowance $A_{sne} > 0{,}05\ m_{mn}$.

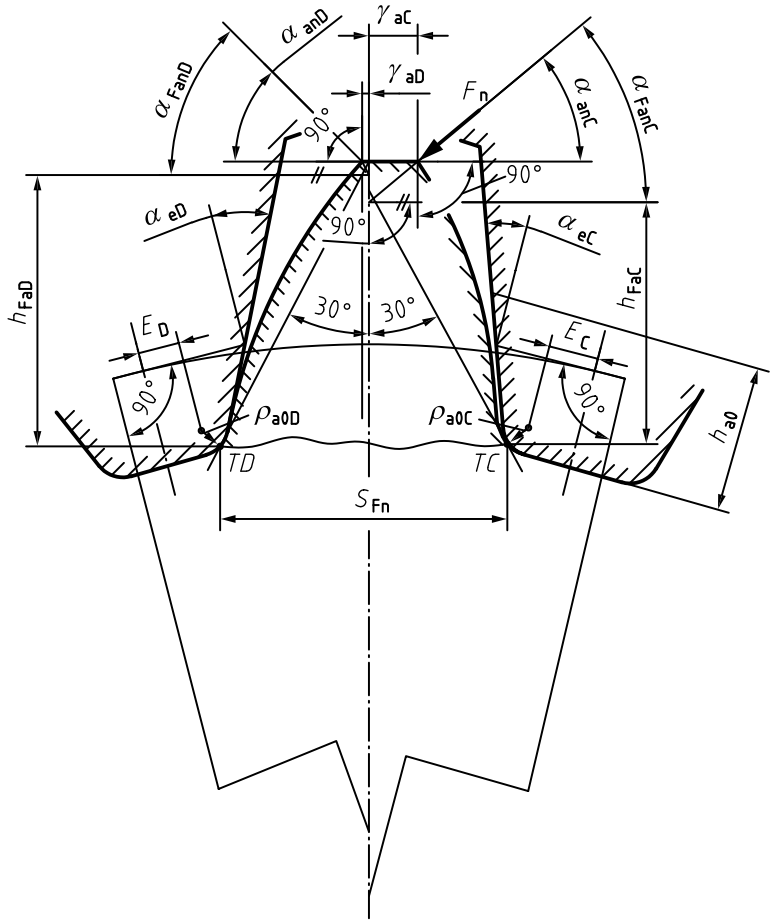

Figure 1 — Tooth root chordal thickness s_{Fn} and bending moment arm h_{Fa} in normal section for load application, F_n, at the tooth tip of the virtual cylindrical gear

6.4.1.2 Tooth form factor for generated gears

6.4.1.2.1 General

The tooth form factor, Y_{Fa}, of generated bevel gears is calculated with parameters of the active flank of the virtual cylindrical gear in normal section which includes the corresponding effective pressure angle α_{eD} or α_{eC} (see Annex A of ISO 10300-1:2014). However, the direction of the normal force, F_n, in relation to the tangential force, F_{vmt}, is given by the generated pressure angle α_{nD} or α_{nC}.

Attention — The tooth form factor, Y_F, and its parameters shall be determined for the pinion (suffix 1) and the wheel (suffix 2) separately:

© ISO 2014 – All rights reserved
Documents
Document Sharing Hub
Full document details: BS ISO 10300-3:2014

$$Y_{\mathrm{FaD,C}} = \frac{6\dfrac{h_{\mathrm{FaD,C}}}{m_{\mathrm{mn}}}\cos\alpha_{\mathrm{FanD,C}}}{\left(\dfrac{s_{\mathrm{Fn}}}{m_{\mathrm{mn}}}\right)^2\cos\alpha_{\mathrm{nD,C}}} \tag{6}$$

where

$h_{\mathrm{FaD,C}}$ and $\alpha_{\mathrm{FanD,C}}$ see 6.4.1.2.5;

$\alpha_{\mathrm{n}} = \alpha_{\mathrm{nD}}$ = generated pressure angle for drive side (specified in ISO 23509);

$\alpha_{\mathrm{n}} = \alpha_{\mathrm{nC}}$ = generated pressure angle for coast side (specified in ISO 23509).

See Figure 1 for the explanation of parameters; see ISO 6336-3[1] for more information about the tooth form factor.

6.4.1.2.2 Auxiliary quantities

For the calculation of the tooth root chord, s_{Fn}, and the bending moment arm, h_{Fa}, firstly, the auxiliary quantities E, G, H and ϑ shall be determined.

The parameter, E, is calculated for the magnitudes of the active flank. For generated hypoid gears, the effective pressure angle $\alpha_{\mathrm{e}} = \alpha_{\mathrm{eD}}$ for the drive side and $\alpha_{\mathrm{e}} = \alpha_{\mathrm{eC}}$ (see ISO 23509) for the coast side, respectively, are used in Formula (7). Note, the cutter edge radii ρ_{a0D} and ρ_{a0C} as well as the protuberance, $s_{\mathrm{prD,C}}$, might also be different, but not h_{a0}, which is the tool addendum:

$$E_{\mathrm{D,C}} = \left(\frac{\pi}{4} - x_{\mathrm{sm}}\right)m_{\mathrm{mn}} - h_{\mathrm{a0}}\tan\alpha_{\mathrm{eD,C}} - \frac{\rho_{\mathrm{a0D,C}}\left(1-\sin\alpha_{\mathrm{eD,C}}\right) - s_{\mathrm{prD,C}}}{\cos\alpha_{\mathrm{eD,C}}} \tag{7}$$

$$G_{\mathrm{D,C}} = \frac{\rho_{\mathrm{a0D,C}}}{m_{\mathrm{mn}}} - \frac{h_{\mathrm{a0}}}{m_{\mathrm{mn}}} + x_{\mathrm{hm}} \tag{8}$$

$$H_{\mathrm{D,C}} = \frac{2}{z_{\mathrm{vnD,C}}}\left(\frac{\pi}{2} - \frac{E_{\mathrm{D,C}}}{m_{\mathrm{mn}}}\right) - \frac{\pi}{3} \tag{9}$$

$$\vartheta_{\mathrm{D,C}} = \frac{2G_{\mathrm{D,C}}}{z_{\mathrm{vnD,C}}}\tan\vartheta_{\mathrm{D,C}} - H_{\mathrm{D,C}} \tag{10}$$

For the solution of the transcendent Formula (10), $\vartheta = \pi/6$ may be inserted as the initial value. A suggested value for the difference $(\vartheta_{\mathrm{new}} - \vartheta)$ is 0,000 001. In most cases, the calculation already converges after a few iterations.

6.4.1.2.3 Tooth root chordal thickness, s_{Fn}

The tooth root chords s_{FnD} and s_{FnC} are calculated for pinion and wheel, each with the corresponding geometry data for the drive flank and the coast flank:

$$s_{\mathrm{FnD,C}} = m_{\mathrm{mn}} z_{\mathrm{vnD,C}} \sin\left(\frac{\pi}{3} - \vartheta_{\mathrm{D,C}}\right) + m_{\mathrm{mn}}\sqrt{3}\left(\frac{G_{\mathrm{D,C}}}{\cos\vartheta_{\mathrm{D,C}}} - \frac{\rho_{\mathrm{a0D,C}}}{m_{\mathrm{mn}}}\right) \tag{11}$$

Then, the respective tooth root chord s_{Fn} for pinion or wheel results in:

$$s_{\mathrm{Fn}} = 0{,}5 s_{\mathrm{FnD}} + 0{,}5 s_{\mathrm{FnC}} \tag{12}$$

© ISO 2014 – All rights reserved

Documents
Document Sharing Hub
Full document details: BS ISO 10300-3:2014

6.4.1.2.4 Fillet radius, ρ_F, at contact point of 30° tangent

The fillet radius, ρ_F, is calculated with the corresponding geometry data for the drive flank and the coast flank:

$$\rho_{F\,D,C} = \rho_{a0D,C} + \frac{2G_{D,C}^2 m_{mn}}{\cos\vartheta_{D,C}\left(z_{vnD,C}\cos^2\vartheta_{D,C} - 2G_{D,C}\right)} \tag{13}$$

6.4.1.2.5 Bending moment arm, h_{Fa}

The bending moment arm, h_{Fa}, is calculated with geometry data referring to the drive flank and to the coast flank:

$$h_{FaD,C} = \frac{m_{mn}}{2}\left[\left(\cos\gamma_{aD,C} - \sin\gamma_{aD,C}\,\tan\alpha_{FanD,C}\right)\frac{d_{vanD,C}}{m_{mn}} - z_{vnD,C}\,\cos\left(\frac{\pi}{3} - \vartheta_{D,C}\right) - \frac{G_{D,C}}{\cos\vartheta_{D,C}} + \frac{\rho_{a0D,C}}{m_{mn}}\right] \tag{14}$$

where

$$\alpha_{FanD,C} = \alpha_{anD,C} - \gamma_{aD,C} \tag{15}$$

$$\alpha_{anD,C} = \arccos\left(\frac{d_{vbnD,C}}{d_{vanD,C}}\right) \tag{16}$$

$$\gamma_{aD,C} = \frac{1}{z_{vnD,C}}\left[\frac{\pi}{2} + 2\left(x_{hm}\,\tan\alpha_{eD,C} + x_{sm}\right)\right] + \mathrm{inv}\,\alpha_{eD,C} - \mathrm{inv}\,\alpha_{anD,C} \tag{17}$$

where

$\alpha_e = \alpha_{eD}$ = generated pressure angle for drive side;

$\alpha_e = \alpha_{eC}$= effective pressure angle of coast side (specified in ISO 23509).

Data of the virtual cylindrical gears (pinion and wheel) in normal section, d_{van}, d_{vbn} and z_{vn}, are specified in ISO 10300-1:2014, A.3. Dimensions at the basic rack profile of the tooth are shown in Figure 2.

At the design stage, the tooth form factor Y_{Fa} for bevel gears without offset may be calculated for a basic rack profile of the tool with the following data α_n = 20°, h_{a0}/m_{mn} = 1,25, and ρ_{a0}/m_{mn} = 0,25. Diagrams for this and other basic rack profiles are given in ISO 6336-3.[1]

6.4.1.3 Tooth form factor for non-generated gears

The tooth form factor, Y_{Fa}, for non-generated bevel gears should be considered separately. In this case of form cutting the slot profile of the wheel is identical to the tool profile and so the tooth form factor can directly be determined (see Figure 2).

The tooth form factor of the pinion, which is manufactured by a specific generating process, may be approximated by the formulae according to 6.4.1.2. Hypoid gears are calculated with geometry data for drive side and coast side.

© ISO 2014 – All rights reserved
Documents
Document Sharing Hub
Full document details: BS ISO 10300-3:2014